VOLUME I OF II

CONTRACT DOCUMENTS

Lake Improvement Project Office

CSO 044 CONVEYANCE PROJECT

CONTRACT NO. 6 – GENERAL

PROJECT NUMBER 587948
BID REFERENCE 7022

JUNE 1, 2010
REVISED AUGUST 2010

COUNTY OF ONONDAGA, NEW YORK
DEPARTMENT OF WATER ENVIRONMENT PROTECTION

JOANNE M. MAHONEY, COUNTY EXECUTIVE
PATRICIA M. PASTELLA, P.E., COMMISSIONER

ENVIRONMENTAL ENGINEERING ASSOCIATES, LLP
6723 TOWPATH ROAD, BOX 66
SYRACUSE, NEW YORK 13214-0066

ONONDAGA COUNTY DEPARTMENT
OF WATER ENVIRONMENT PROTECTION

Lake Improvement Project Office

This document contains General Conditions and Specifications for projects administered through the Lake Improvement Project Office (LIPO) of the Onondaga County Department of Water Environment Protection (OCDWEP). As such, provisions and language of this document are unique and solely applicable for LIPO administered projects.

Sections have been arranged in the following general order:

ADDENDA
ADVERTISEMENT
DEFINITION OF TERMS
INFORMATION FOR BIDDERS
BID
AGREEMENT
SPECIAL PROJECT CONDITIONS
GENERAL PROVISIONS
GENERAL SPECIFICATIONS
TECHNICAL SPECIFICATIONS
PAYMENT ITEMS
INDEX TO DRAWINGS

TABLE OF CONTENTS

FOR

CSO 044 CONVEYANCES PROJECT

VOLUME I OF II

ADDENDA, if any, as identified in Article 6 of the Agreement

ADVERTISEMENT ..... AD-1 to AD-2

DEFINITION OF TERMS ..... DT-1 to DT-5

INFORMATION FOR BIDDERS

Section 1 – Project Information
1.01 Commencement and Completion ..... IFB 1-1
1.02 Existing Conditions and Subsurface Conditions ..... IFB 1-1
1.03 Index of Drawings ..... IFB 1-2
1.04 Contract Drawings Furnished to Bidders ..... IFB 1-2
1.05 Contract Drawings Furnished to Contractors ..... IFB 1-2
1.06 Taxes ..... IFB 1-2

Section 2 – Instructions to Bidders
2.01 Qualifications of Bidders ..... IFB 2-1
2.02 Bidder's Responsibility ..... IFB 2-1
2.03 Addenda and Interpretation ..... IFB 2-1
2.04 Bid Instructions ..... IFB 2-1
2.05 Bid Security ..... IFB 2-2
2.06 Discrepancy in Bids ..... IFB 2-2
2.07 Lowest Bidder ..... IFB 2-2
2.08 Award of Contract ..... IFB 2-2
2.09 Liquidated Damages for Failure to Execute Contract ..... IFB 2-3
2.10 Prior Approval of Equipment, Methods or Materials ..... IFB 2-3
2.11 Estimated Quantities ..... IFB 2-3
2.12 Unbalanced Bids ..... IFB 2-3

Section 3 – Onondaga County MBE/WBE and Minority Workforce Requirements
3.01 Minority/Women Business Enterprise Workforce Requirements ..... IFB 3-1
3.02 Summary of Forms ..... IFB 3-2
3.03 Special Provisions Concerning Utilization of M/WBE and Minority and Female Workforce Requirements ..... IFB 3-3
3.04 Contractor Obligations ..... IFB 3-11

Section 4 - Insurance and Bonds and Hold Harmless, Defense and Indemnification
4.01 Contractor's Obligations ..... IFB 4-1

Section 5 - Conflict of Interest
5.01 Contractor's Obligations ..... IFB 5-1

TABLE OF CONTENTS

INFORMATION FOR BIDDERS (continued)

Section 6 – County, New York State, and Federal Provisions
6.01 County Provisions ..... IFB 6-1
6.02 New York State Provisions ..... IFB 6-1
6.03 Amended Consent Judgment Project Conditions – Time is of the Essence IFB 6-2
6.04 Project Labor Agreement (PLA) ..... IFB 6-2
6.05 Federal Requirements and Contract Provisions for the Appropriations Grants (USEPA-Region 2) ..... IFB 6-3
6.06 Federal Requirements and Contract Provisions for the American Recovery and Reinvestment Act (ARRA) Fund Recipients ..... IFB 6-3

APPENDICES TO INFORMATION FOR BIDDERS

A Onondaga County MBE/WBE Forms
B Sample Workers' Compensation Forms
C New York State Department of Labor Contract Requirements and Wage Rate Schedule
D Standard Clauses for New York State Contracts
E Standard Clauses for NYSDEC Contracts
F Project Labor Agreement (PLA)
G Federal Requirement Provisions
H Federal Requirement Provisions for the ARRA Fund Recipients and Davis-Bacon (Federal) Prevailing Wage Rates

BID

1.01 Certificate of Non-Collusion B-1
1.02 Bidder's Examination of Documents and Work Site B-1
1.03 Bidder's Acknowledgment of Contract Time and Liquidated Damages B-1
1.04 Bidder's Offer B-1
1.05 Bid Form B-2
1.06 Bid Acceptance B-3
1.07 Bidder's Acknowledgment of Labor Law Requirements B-3
1.08 Bid Withdrawal B-3
1.09 Bid Security B-3
1.10 Bid Signature Block B-4
Resolution - Corporate Bidders B-5
Bid Security B-6
Statement of Surety's Intent B-7
Certification of Non-Segregated Facilities B-8
Buy American Requirements B-9
Buy American – Project Components Waiver Request Form B-10
Conceptual M/WBE Work Plan B-11
DBE Subcontractor Utilization Form B-13
DBE Subcontractor Performance Form B-14

AGREEMENT

Article 1 - Description A-1
Article 2 - Performance A-1
Article 3 - Compensation A-1
Article 4 - Contract Documents A-1
Article 5 - Failure to Comply A-1

TABLE OF CONTENTS

AGREEMENT (continued)

Article 6 - Governing Law A-1
Article 7 - Venue A-1
Article 8 - Appropriations A-2
Article 9 - Suspension and Debarment A-2
Article 10 - Severability A-2
Article 11 - Insurance and Bonds and Hold Harmless, Defense and Indemnification A-2
Article 12 - Conflict of Interest A-11
Article 13 - Assignment A-12
Article 14 - Independent Contractor A-12
Article 15 - Licenses and Permits A-12
Article 16 - Contract Modifications A-13
Article 17 - Statutory Compliance A-13
Article 18 - Clauses Required by Law A-13
Article 19 - Addenda A-13
Signature of Parties A-13
Acknowledgments A-14
Fair Employment Clause A-15
Conflict of Interest Affidavit A-16
Certificate of Insurance A-17

SPECIAL PROJECT CONDITIONS

P-001 Location and Description of Project SPC-1
P-002 Receipt and Opening of Bids SPC-1
P-003 Pre-Bid Meeting/Site Visit SPC-2
P-004 Revisions to Information to Bidders SPC-2
P-005 Owner's Engineer SPC-4
P-006 Time is of the Essence SPC-4
P-007 Order of Work SPC-5
P-008 Pipe Material References SPC-6
P-009 Project Funding Agencies SPC-6
P-010 Contractor's Insurance SPC-6
P-011 Hold Harmless, Defense and Indemnification SPC-6
P-012 Site Safety Responsibilities and Roles SPC-7
P-013 Specific Permit Information SPC-8
P-014 Contaminated (Impacted) Materials Requirements SPC-10
P-015 Storage of Equipment and Materials SPC-11
P-016 Non-Working Hours Construction Noise Limits SPC-11
P-017 Work Near Gas Mains SPC-11
P-018 Equipment Manufacturer's Electronic Manuals and Information SPC-12
P-019 Borings and Other Subsurface Information SPC-13
P-020 Disposal of Construction and Demolition Debris SPC-13
P-021 Reference Information SPC-13
P-022 City of Syracuse Survey Monuments SPC-14
P-023 Air Quality SPC-14
P-024 Noise Meter SPC-14
P-025 Schedule SPC-14
P-026 Disruption of Owner's Operations SPC-15
P-027 Inspection of the Work SPC-15
P-028 Maintenance of Sewer Flows SPC-15

TABLE OF CONTENTS

SPECIAL PROJECT CONDITIONS (continued)

P-029 Shop Drawing Submittal Procedures SPC-15
P-030 Schedule of Equipment Testing and Manufacturers' Services SPC-16
P-031 Performance Affidavits SPC-17
P-032 Beneficial Occupancy of Operating Equipment and Systems SPC-17
P-033 Pest Control SPC-17
P-034 Owner's Right to Stop/Suspend Work and/or Terminate Contract SPC-21
P-035 Restoration of Existing Landscaping SPC-23
P-036 Temporary Security Fencing SPC-24
P-037 Overhead and Profit on Adjustments in Contract Price SPC-24
P-038 Concrete Bench Wall Work SPC-24
P-039 Geotechnical Instrumentation and Pre-Construction Recording on Private Properties SPC-24
P-040 Relocation of Existing Utilities by Utility Owners SPC-25
P-041 Provisions for Steel Price Adjustment SPC-25
P-042 Provisions for Fuel Price Adjustment SPC-27
P-043 Verification of Existing Weir Elevations at Existing Regulator Structures SPC-27
P-044 Temporary Parking Area at 807-809 South Avenue SPC-28
P-045 Provisions for Asphalt Price Adjustment SPC-29
P-046 ARRA Funding Requirements SPC-30
P-047 Construction Equipment and Vehicles SPC-30

APPENDICES TO SPECIAL PROJECT CONDITIONS

Appendix A
ARRA Posters

GENERAL PROVISIONS

Section 1 - Contractor's Obligations
1.01 Contractor's Work ..... GP 1-1
1.02 Representations of Contractor ..... GP 1-1
1.03 Permits, Laws and Regulations ..... GP 1-1
1.04 Contractor's Address ..... GP 1-2
1.05 Emergency Calls ..... GP 1-2
1.06 Contractor's Agents, Superintendents and Foreman ..... GP 1-2
1.07 Contractor's Personnel ..... GP 1-2
1.08 Safety and Accident Prevention ..... GP 1-3
1.09 Hazardous Communication Standard Compliance ..... GP 1-4
1.10 Patents ..... GP 1-5
1.11 No Claims Against Individuals ..... GP 1-5
1.12 Contractor's Title to Material ..... GP 1-5
1.13 One-Year Guarantee ..... GP 1-5
1.14 Underground Utilities ..... GP 1-6

Section 2 - Assignments and Subcontracts
2.01 Assignment ..... GP 2-1
2.02 Subcontracts ..... GP 2-1
2.03 Subcontractor's Wage Rates ..... GP 2-1

TABLE OF CONTENTS

GENERAL PROVISIONS (continued)

Section 3 - Owner's Representatives
3.01 Owner ..... GP 3-1
3.02 Engineer ..... GP 3-1
3.03 Owner's Representative ..... GP 3-1
3.04 Inspection of the Work ..... GP 3-1
3.05 No Waiver of Rights; No Estoppel ..... GP 3-2

Section 4 - Time Provisions
4.01 Commencement and Completion of Work ..... GP 4-1
4.02 Pre-construction Meeting ..... GP 4-1
4.03 Progress and Coordination Meetings ..... GP 4-1
4.04 Rate of Progress ..... GP 4-1
4.05 Charges for Delay ..... GP 4-2
4.06 Extension of Time ..... GP 4-3
4.07 No Damage for Delay GP-4-3

Section 5 - Changes
5.01 Owner's Changes in the Work ..... GP 5-1
5.02 Contractor's Claims ..... GP 5-1
5.03 Adjustments in Contract Price ..... GP 5-1
5.04 Modification and Change Order Procedures ..... GP 5-5
5.05 Change in Contract Time Associated With Modifications ..... GP 5-7
5.06 Adjustment of Contract Time ..... GP 5-8
5.07 Payment of Claims and Disputed Amounts ..... GP 5-10

Section 6 - Payments
6.01 Estimated Quantities ..... GP 6-1
6.02 Prices ..... GP 6-1
6.03 Breakdown of Lump Sum Items ..... GP 6-2
6.04 Current Estimate and Payment ..... GP 6-2
6.05 Payment for Delivered Equipment and Materials ..... GP 6-2
6.06 Owner's Right to Withhold Payments ..... GP 6-3
6.07 Beneficial Occupancy and Substantial Completion ..... GP 6-3
6.08 Payment at Substantial Completion (Final Payment) ..... GP 6-5
6.09 Acceptance of Final Payment Constitutes Release ..... GP 6-6
6.10 Completion of Punch List Work ..... GP 6-6
6.11 Remedial Restoration ..... GP 6-6

Section 7 - Termination of Contract
7.01 Owner's Right to Stop Work or Terminate Contract for Cause ..... GP 7-1
7.02 Termination for Convenience ..... GP 7-2
7.03 Owner's Right to Make Deductions or Set-Offs in Event of Termination or Stoppage of Work ..... GP 7-2

Section 8 - Miscellaneous Provisions
8.01 Provisions Required by Law Deemed Inserted ..... GP 8-1
8.02 Unlawful Provisions Deemed Stricken ..... GP 8-1
8.03 Reuse of Documents ..... GP 8-1

TABLE OF CONTENTS

APPENDICES TO GENERAL PROVISIONS

Appendix A
Certification of Subcontractor Payment Status (Form GP-001)
Application and Certificate for Payment
Project Closeout/Final Payment Checklist

GENERAL SPECIFICATIONS

S-001 Intent of Contract Documents GS-1
S-002 Precedence of Contract Documents GS-2
S-003 Published Standards and Specifications GS-2
S-004 Care and Protection of Work GS-2
S-005 Collateral Work GS-3
S-006 Access to Work GS-3
S-007 Covering of Underground Work - Authorization of Owner GS-3
S-008 Work in Inclement Weather GS-4
S-009 Working Hours GS-4
S-010 Disruption of Owner's Operations GS-4
S-011 Equipment/Process Isolation GS-4
S-012 Lines, Grades and Elevations and Restoration of Survey Markings GS-4
S-013 Shop Drawings GS-5
S-014 Layout and Coordination Drawings GS-6
S-015 Record Drawings GS-7
S-016 Material, Equipment and Workmanship GS-8
S-017 Equivalent Product and Substitutions GS-9
S-018 Delivery and Storage of Materials and Equipment GS-9
S-019 Material Testing GS-11
S-020 Old Materials GS-10
S-021 Disposal of Spoil GS-11
S-022 Cleaning GS-11
S-023 Ground Available to Contractor GS-11
S-024 Protection, Security and Maintenance of Site GS-11
S-025 Protection and Restoration of Existing Structures, Facilities and Features GS-12
S-026 Existing Features Found Different GS-14
S-027 Pollution Control and Purchase and Use of Recycled Products GS-15
S-028 Maintenance of Flow GS-16
S-029 Maintenance of Utilities GS-16
S-030 Work by Utilities GS-16
S-031 Maintenance of Traffic GS-17
S-032 Utilities Used by Contractor GS-17
S-033 Temporary Facilities GS-17
S-034 Hangers, Supports and Restraints GS-19
S-035 Chases, Openings, Sleeves, Inserts, Embedded Items GS-19
S-036 Labeling GS-19
S-037 Electrical Interconnection Data GS-20
S-038 Equipment Manufacturers' Manuals and Information GS-22
S-039 Services of Manufacturer's Factory Representatives - Startup and Training GS-24
S-040 Beneficial Occupancy of Operating Equipment and Systems GS-25
S-041 Temporary Construction Fencing GS-27
S-042 Storage of Flammable or Explosive Materials on Site GS-27

TABLE OF CONTENTS

APPENDICES TO GENERAL SPECIFICATIONS

Appendix A
Equipment Manual Transmittal Form
Electrical Interconnection Data Form
Substitution Procedures and Application Form

TECHNICAL SPECIFICATIONS

Division 1 – General Requirements
01323 Color Audio-Video Pre-Construction Records
01500 Temporary Facilities and Controls
01501 Project Sign
01510 Engineer's Field Office

Division 2 – Site Work
02015 Geotechnical Instrumentation
02120 Waste Movement, Transportation, and Disposition
02140 Dewatering
02170 Temporary Excavation Support
02190 Maintenance of Sewer Flows
02222 Controlled Blasting
02224 Impacted Material Handling (with Attachment A: Environmental Response Plan)
02229 Waterway Protection
02230 Selected Fill
02270 Geotextile Fabric
02300 Earthwork
02305 Subbase
02370 Erosion and Sediment Control Plan
02399 Existing Sewer Abandonment

TABLE OF CONTENTS

FOR

CSO 044 CONVEYANCES PROJECT

VOLUME II OF II

TECHNICAL SPECIFICATIONS

Division 2 – Site Work (Continued)
02501 Underground Pressure Piping Installation
02510 Water Distribution System
02511 Replacement of Lead and Galvanized Steel Water Services
02514 Precast Concrete Manholes, Catch Basins and Structures
02515 Walks and Curbs
02527 Prestressed Concrete Cylinder Pipe (PCCP)
02530 Sewage and Drainage Piping Installation
02618 Ductile Iron Pipe
02620 Polyvinyl Chloride (PVC) Non-Pressure Pipe
02621 Fiberglass Reinforced Polymer (FRP) Pipe
02622 Large Diameter High Density Polyethylene (HDPE) Pipe
02623 Small Diameter High Density Polyethylene (HDPE) Pipe
02624 Perforated Plastic Pipe
02646 Rip Rap
02675 Pressure and Leakage Testing
02721 Paving and Surfacing
02765 Sewer Cleaning
02890 Traffic Signs
02891 Relocating Traffic Signs
02936 Lawns
02950 Planting

Division 3 – Concrete
03100 Concrete Formwork
03200 Concrete Reinforcement
03250 Concrete Joints and Accessories
03300 Cast-In-Place Concrete
03301 Tightness Testing of Fluid Containment Concrete Structures
03350 Concrete Finishes
03370 Concrete Curing and Protection
03600 Grout

Division 5 – Metals
05500 Miscellaneous Fabrications
05505 Concrete and Masonry Anchors

Division 9 – Finishes
09900 Field Painting

Division 11 – Equipment
11296 Conveyance Flushing System

TABLE OF CONTENTS

TECHNICAL SPECIFICATIONS (continued)

Division 15 – Mechanical
15101 Miscellaneous Valves ad Piping Appurtenances

Division 16 – Electrical
16055 Electrical Work
16161 Control Panels and Enclosures
16484 Contactors and Motor Starting Equipment
16900 Auxiliary Controls and Relays
16950 Testing and Inspection

Division 17 – Instrumentation and Control Systems
17105 Fiber Optic Communication Systems

PAYMENT ITEMS

Section 1 – Stipulated Maximum Lump Sum Items
Item 1.1 Mobilization/Demobilization

Section 2 – Stipulated Minimum Unit Price Items
Item 2.1 Excavation Below Subgrade
Item 2.2 Miscellaneous Excavation

Section 3 – Lump Sum Items
Item 3.1 Miscellaneous Work
Item 3.2 Maintenance and Protection of Traffic
Item 3.3 Bioretention Basin
Item 3.4 Maintenance of Sewer Flows
Item 3.5 Site Security
Item 3.6 Temporary Parking Area at 807-809 South Avenue
Item 3.7 Clean Existing 144-Inch Diameter Pipe
Item 3.8 Modifications to Existing CSO 044
Item 3.9 Temporary Excavation Support System
Item 3.10 Dewatering
Item 3.11 Connection to Existing Vacuum Flushing Chamber VFC-2
Item 3.12 Conveyance Flushing Chambers
Item 3.13 Manhole MH-1
Item 3.14 Relocate Existing Water Mains – C-1 and C-2 to C-3
Item 3.15 Modifications to Existing Facilities
Item 3.16 Plantings
Item 3.17 Grouting of Existing Rip Rap
Item 3.18 Equipment and Electrical Service and Controls

Section 4 – Unit Price Items

Item 4.1 Restoration of Non-Paved Surfaces
Item 4.2 Rock Extrication
Item 4.3 Controlled Low Strength Material (CLSM)
Item 4.4 Select Fill Materials

TABLE OF CONTENTS

PAYMENT ITEMS (continued)

Item 4.5 Temporary Excavation Support System Materials Left in Place as Ordered by Engineer
Item 4.6 Geotextile Stabilization (Woven) Fabric
Item 4.7 Catch Basins
Item 4.8 PVC Sewer Pipe – 12-Inch-Diameter
Item 4.9 HDPE, FRP or PCCP Sewer Pipe – 96-Inch-Diameter
Item 4.10 Precast Type 2 Manholes (Depth up to 8 feet) – 48-Inch-Diameter, Storm Sewer
Item 4.11 Additional Depth of Precast Type 2 Manholes – 48-Inch-Diameter
Item 4.12 Bioretention Swales
Item 4.13 Precast Stormwater Storage Tank
Item 4.14 Remove Existing Trolley Rail
Item 4.15 Sidewalk Restoration
Item 4.16 Embedded Preformed Detectable Warning Units
Item 4.17 Granite Curbing
Item 4.18 Concrete Foundation for Street Pavement
Item 4.19 Bituminous Asphalt Pavements
Item 4.20 Mass Concrete
Item 4.21 Replacement of City of Syracuse Survey Monuments
Item 4.22 Replacement of Sewer Vents and Cleanouts
Item 4.23 Water Service Replacements
Item 4.24 Cast Iron Soil Pipe
Item 4.25 Removal/Disposal of Non-Hazardous Industrial Solid Waste Generated During Earthwork
Item 4.26 Removal/Disposal of Construction/Demolition Debris Generated During Earthwork
Item 4.27 Geotechnical Instrumentation
Item 4.28 Replacement of Lead and Galvanized Steel Water Services
Item 4.29 Trench Drain
Item 4.30 Connection to Existing Catch Basins
Item 4.31 DIP Sewer Pipe – 12-Inch-Diameter

Section 5 – Allowance Items

Item 5.1 Miscellaneous Existing Utility Modifications Allowance
Item 5.2 Relocation of Existing Utilities by Utility Owners Allowance
Item 5.3 Mitigation Measures for Groundwater Dewatering
Item 5.4 Steel Price Adjustment
Item 5.5 Fuel Price Adjustment
Item 5.6 Asphalt Price Adjustment
Item 5.7 Additional Site Restoration Allowance

INDEX TO DRAWINGS

General Drawings

Cover Sheet
G-1 Index of Drawings, Symbols, Notes and Abbreviations
G-2 General Notes
G-3 Key Plan And Survey Control
G-4 Site Layout And Security Plan
G-5 Utility Modifications

TABLE OF CONTENTS

INDEX TO DRAWINGS (continued)

G-6 Plan and Profile Sta. 12+00 To 17+00
G-7 Miscellaneous Profiles
G-8 Utility Relocation Details
G-9 Water Main and Utility Crossing Details
G-10 Water Main Details
G-11 South Avenue Regulator Structure Plan and Section
G-12 Conveyance Flushing Chamber A Plan and Sections
G-13 Conveyance Flushing Chamber B Plan and Section
G-14 Traffic Control Notes and Details
G-15 Traffic Control Plan
G-16 Erosion and Sediment Control Plan
G-17 Erosion and Sediment Control Details
G-18 Sanitary Sewer Lateral Details
G-19 Pipe Foundation/Trench Details and Geotechnical Instrumentation Plan
G-20 Geotechnical Instrumentation Details
G-21 Road Reconstruction Plan and Profile
G-22 Road Reconstruction Profiles/Bank Stabilization Plan and Details
G-23 Restoration Details
G-24 Restoration Details
G-25 Restoration Details
G-26 Storm Sewer System Details
G-27 Storm Sewer Manhole Details
G-28 Miscellaneous Details
G-29 Miscellaneous Details
G-30 Miscellaneous Details
G-31 Miscellaneous Details
G-32 Miscellaneous Details
G-33 Existing 144-Inch Plan and Profile Sta. 0+00 to 6+00
G-34 Existing 144-Inch Plan and Profile Sta. 6+00 to 12+00

Landscape Architecture Drawings

LA-1 Landscape Plan 1
LA-2 Landscape Plan 2
LA-3 Landscape Plan 3

Structural Drawings

S-1 Structural Abbreviations and General Notes
S-2 Standard Details
S-3 Conveyance Flushing Chamber A Plans
S-4 Conveyance Flushing Chamber A Sections
S-5 Conveyance Flushing Chamber B Plans and Sections
S-6 South Avenue Regulator Plans and Sections

Electrical Drawings

E-1 Abbreviations, Symbols, Notes and Miscellaneous Details
E-2 Electrical Site Plan, Schematic and Details

TABLE OF CONTENTS

SUPPLEMENTAL INFORMATION – PART OF THE CONTRACT DOCUMENTS
(Provided on CD enclosed within Volume II of the Contract Documents)

1. Geotechnical Data Report, CSO 044 Conveyance Project, prepared by Brierley Associates, LLC, April 2010 (Revised May 2010).

2. Geotechnical Baseline Report, CSO 044 Conveyance Project, prepared by Brierley Associates, LLC, May 2010.

3. Procedures Governing the Acceptance and Treatment of Groundwater and Other Contaminated Wastewater, Onondaga County Department of Water Environment Protection, January 4, 2008.

REFERENCE INFORMATION – NOT PART OF THE CONTRACT
(Provided on CD enclosed within Volume II of the Contract Documents)

1. Phase I Environmental Assessment, Midland Avenue Regional Treatment Facility and Conveyances, Phase Three Project, prepared by Environmental Engineering Associates, LLP, January 27, 2006.

2. Phase II Environmental Assessment, Midland Avenue Regional Treatment Facility and Conveyances, Phase Three Project, prepared by Environmental Engineering Associates, LLP, April 2007.

3. Phase IA Literature Review and Archeological Sensitivity Assessment, Midland Avenue Regional Treatment Facility and Conveyances Phase Three Project, prepared by Hartgen Archeological Associates, Inc., January 2006.

4. Phase IB Archeological Field Reconnaissance, Midland Avenue Regional Treatment Facility and Conveyances Phase Three Project, prepared by Hartgen Archeological Associates, Inc., October 2006 (updated March 8, 2007).

All Supplemental and Reference Information may be examined at the Engineer's office, Environmental Engineering Associates, LLP, 6723 Towpath Road, Syracuse, NY 13214-0066.

ADVERTISEMENT

NOTICE TO CONTRACTORS FOR THE CONSTRUCTION OF CONTRACT NO. 6 – GENERAL

CSO 044 CONVEYANCE PROJECT

BID REFERENCE NO. 7022
PROJECT NO. 587948

Sealed bids for the construction of Contract No. 6 – General for the CSO 044 Conveyance Project, will be received by the Director, Onondaga County Division of Purchase, 13th Floor Civic Center, 421 Montgomery Street, Syracuse, New York 13202, until 2:00 P.M. Local Time, on September 14, 2010, and there at said office, at said time, publicly opened and read aloud.

The project will generally consist of connection to the termination of the 144-inch diameter Midland Avenue Conveyance pipeline constructed under the Midland Avenue RTF and Conveyances, Phase Two Project located on the north side of West Castle Street east of the intersection of Dearborn Place; construction of approximately 500 linear feet of 96-inch diameter pipeline from the current termination mentioned above west along West Castle Street, crossing South Avenue to a point on the west side of the intersection of South Avenue and West Castle Street; construction of the South Avenue Regulator Structure; construction of two Conveyance Flushing Chambers; and construction of approximately 500 linear feet of 12-inch diameter storm sewer and associated manholes and catch basins.

The Contract Documents, including Information for Bidders and Bid Forms may be obtained from Environmental Engineering Associates, LLP (EEA), 6723 Towpath Road, Box 66, Syracuse, NY, 13214-0066 upon deposit of $100.00 per set (checks only, **made payable to County of Onondaga**). Requests for Contract Documents to be sent via standard U.S. mail must be accompanied by a separate non-refundable $15.00 check (**made payable to Environmental Engineering Associates, LLP**) to cover postage. Requests for Contract Documents to be sent via express shipping must be accompanied by the recipient's Federal Express or UPS account number. The full amount of the deposit for sets of Contract Documents will be refunded to all holders of the Contract Documents who return their Contract Documents complete and in good condition within thirty days following award of the Contract or rejection of the bids.

Copies of the above described Contract Documents may be examined at no expense at the Division of Purchase, 13th Floor Civic Center, 421 Montgomery Street, Syracuse, New York 13202; at the office of the County of Onondaga, Department of Water Environment Protection, 3rd Floor, Administration Building, 650 Hiawatha Boulevard West, Syracuse, New York 13204; F.W. Dodge, 4 Adler Drive, East Syracuse, New York 13057 the Syracuse Builders Exchange, Inc., 6563 Ridings Road, Syracuse, New York 13206; and at the Engineer's office, Environmental Engineering Associates, LLP (EEA), 6723 Towpath Road, Syracuse, New York 13214-0066.

A pre-bid meeting/site visit will be held on August 25, 2010 at 11:00 A.M. at the offices of the County of Onondaga, Department of Water Environment Protection, Metropolitan Syracuse Wastewater Treatment Plant, Plant Operations Center located at 650 Hiawatha Boulevard West, Syracuse, New York, 13204, Phone (315) 435-2260.

Any contract or contracts awarded under this advertisement for bids are expected to be funded in part by an Appropriations Act grant from the U.S. Environmental Protection Agency. Neither the United States nor any of its departments, agencies or employees is or will be a party to this advertisement for bids or any resulting contract. This procurement will be subject to regulations contained in 40 CFR Part 31.

Bidders are advised that the goods and services for this project may be funded with monies made available by the federal American Reinvestment and Recovery Act of 2009 (ARRA) and such law contains provisions commonly known as "Buy American;" that requires all of the iron, steel, and manufactured goods used in the project to be produced in the United States (Buy American Requirements) including iron, steel, and manufactured goods provided to the Contractor. All provisions of the ARRA shall apply to this project.

Each bid must be accompanied by cash, certified check, or bid bond in an amount not less than five percent (5%) of the amount of the bid in the form and subject to the conditions provided in the Information For Bidders. In addition, the Contractor shall be required to provide a "Statement of Surety's Intent" with his bid.

The Bidders should not include in their bid the Sales and Compensating Use Taxes on the cost of the materials which are to be incorporated into the Project and which are to be separately sold by the Bidder to the municipality prior to incorporation into the Project.

The right is reserved to waive any informalities in the Bid and to reject any or all bids.

ONONDAGA COUNTY, NEW YORK

BY: _____
PATRICIA MOSLEY, DIRECTOR
DIVISION OF PURCHASE

DATE: August 17, 2010

DEFINITION OF TERMS

Wherever used in the Contract Documents the following terms have the meanings indicated, which are applicable to both the singular and plural thereof:

Addenda/(Addendum) – Written or graphic instruments issued by the Division of Purchase prior to the opening of Bids which clarify, correct or change the Bidding Requirements or the Contract Documents.

Agreement or Contract – The written contract between the Owner and the Contractor, including the Contract Documents, and all provisions required by law or regulation to be inserted in the contract, whether actually inserted or not, covering the Work to be performed and other documents referenced by the Agreement as being integral parts of the Contract Documents.

Application for Payment – The form acceptable to the Owner which is to be used by the Contractor in requesting progress or final payments and which is to be accompanied by such supporting documentation as is required by the Contract Documents and the Owner.

Asbestos – Any naturally occurring hydrated mineral silicate separable into commercially usable fibers, including chrysotile (serpentine), amosite (cumingtonite-grunerite), crocidolite (riebeckite), tremolite, anthophyllite, and actinolite.

As Shown – Whenever, in the description of any part of the work, the expressions "As Shown", "Shown on the Plans", or other similar expressions are used, it shall be understood to mean as shown on the Contract Drawings, unless another meaning is plainly indicated.

Beneficial Occupancy – Use or occupancy of the work, or designated parts thereof, by the Owner, even though all of the Contract work, or designated parts thereof, may not be substantially complete.

Bid – The offer or proposal of the bidder submitted on the prescribed form setting forth the prices for the Work to be performed.

Bidding Documents – The advertisement, Information for Bidders, the Bid form, and the proposed Contract Documents (including all Addenda issued prior to receipt of Bids).

Bidding Requirements – As identified in the Advertisement, Information for Bidders, and the Bid form.

Bonds – Performance and Payment bonds and other instruments of security.

Certification of Subcontractor Payment Status – Form GP-001 which certifies the status of the Contractor's disbursement to subcontractors of monies received under periodic applications for payment. This form must be submitted with each payment application by the Contractor in order for the Contractor's application to be considered by the Owner.

Change Order – A document which is signed by the Contractor and the Owner and authorizes an addition, deletion or revision in the work, or an adjustment in the Contract Price or the Contract Times, issued on or after the effective date of the Agreement.

Consent Judgment or ACJ– Shall refer to the Amended Consent Judgment (ACJ) entered in the United States District Court for the Northern District of New York in *Atlantic States Legal Foundation et al. v. Onondaga County et al.*, No. 88-CV-0066, on January 20, 1998, as amended on May 1, 1998 and December 14, 2006.

Construction Project Manager – The person, firm or corporation retained by the Owner for the purpose of administering the construction phase of the ACJ Lake Improvement Project.

Contract Documents – The Agreement, Addenda, and the Table of Contents and all sections and items referred to therein and including but not limited to the following documents shall be deemed to be Contract Documents; - 1. all provisions required by laws and regulations to be inserted in the Agreement, whether actually inserted or not; 2. the Definition of Terms; 3. the Contract Drawings and Technical Specifications; 4. the General Provisions and Special Project Conditions, the General Specifications; 5. the Information for Bidders, Request for Proposals, Notice of Solicitation, Advertisements, Proposal for Bids, Bid or Proposal and Attachments, Bid Forms and if used, the Bid Booklet; 6. all attachments and appendices; 7. any Addenda and any other documents referenced in the Agreement as being integral parts of the Contract Documents together with all bonds, Modification Orders, and Change Orders. Shop Drawing submittals approved pursuant to General Specification S-013 are not Contract Documents.

Contract Price – The moneys payable by the Owner to the Contractor for completion of the work in accordance with the Contract Documents and as stated in the Agreement.

Contract Times – The numbers of days or the dates stated in the Contract Documents to achieve completion of the work.

Contractor – The person, firm or corporation with whom the Owner has entered into the Agreement. If the Contractor is a corporation, the words "he", "him", "his", wherever they refer to the Contractor, shall be read as "it" or "its".

Day – When identified in the Contract Documents, days shall be measured in calendar days.

Defective – An adjective which when modifying the word Work refers to work that is unsatisfactory, faulty or deficient, in that it does not conform to the Contract Documents, or does not meet the requirements of any inspection, reference standard, test or approval referred to in the Contract Documents, or has been damaged prior to the Owner's Representative's recommendation of final payment.

Drawings – The drawings which show the scope, extent and character of the work to be furnished and performed by the Contractor and which have been prepared or approved by the Engineer and are referred to in the Contract Documents. Shop drawings are not Drawings as so defined.

Effective Date of the Agreement – The date indicated in the Agreement on which it becomes effective, but if no such date is indicated it means the date on which the Agreement is signed and delivered by the last of the two parties to sign and deliver.

Engineer (or Owner's Engineer) – The person, firm or corporation named as such in the Special Project Conditions and/or as otherwise identified by the Owner.

Field Order – A directive by the Owner's Representative which orders minor changes in work which do not alter the character, quantity, or cost of the work as a whole. The Contractor shall carry out such Field Orders promptly and without any adjustment of the Contract price or Contract time.

General Conditions – Consist of the General Provisions and General Specifications of the Contract Documents.

Hazardous Waste – The term Hazardous Waste shall have the meaning provided in Section 1004 of the Solid Waste Disposal Act (42 USC Section 6903) as amended from time to time and applicable state law.

Laws and Regulations; Laws or Regulations – Any and all applicable laws, rules, regulations, ordinances, codes and orders of any and all governmental bodies, agencies, authorities and courts having jurisdiction.

Lake Improvement Project Office (LIPO) – The office of Onondaga County, New York that is responsible for the administration of the Consent Judgment improvements and contracts.

Letter of Intent – The written notice by the Owner to the apparent successful bidder stating that upon compliance by the apparent successful bidder with the conditions precedent enumerated therein, within the time specified, the Owner will sign and deliver the Agreement.

Liens – Liens, charges, security interests or encumbrances upon real property or personal property.

Means and Methods – The labor, materials, temporary structures, tools, plant and construction equipment, and the manner and time of their use, necessary to perform the Work and accomplish the result intended by this Agreement.

Milestone – A principal event specified in the Consent Judgment and Contract Documents and as directed by the Owner and the Owner's Representative relating to an intermediate completion date or time prior to Substantial Completion of all the work.

Modification Order – A written directive to the Contractor, issued by the Owner's Representative on or after the effective date of the Agreement, ordering an addition, deletion or revision in the work, or responding to differing or unforeseen physical conditions under which the work is to be performed. A Modification Order will not change the Contract Price or the Contract Times, but is evidence that the parties expect that the change directed or documented by Modification Order will be incorporated in a subsequently issued Change Order following negotiations by the parties as to its effect, if any, on the Contract Price or Contract Times.

Notice to Proceed – A written notice given by the Owner to the Contractor fixing the date on which the Contract Times will commence to run and on which the Contractor shall start to perform his obligations under the Contract Documents.

Owner – County of Onondaga, New York.

Owner's Representative – The person, firm or corporation named as such.

PCBs – Polychlorinated biphenyls.

Petroleum – Petroleum, including crude oil or any fraction thereof which is liquid at standard conditions of temperature and pressure (60° F and 14.7 pounds per square inch absolute), such as oil, petroleum, fuel oil, oil sludge, oil refuse, gasoline, kerosene, and oil mixed with other non-hazardous wastes and crude oils.

Post-bid Meeting – Meeting conducted by Owner's Representative and Engineer, after receipt of bids and prior to formal award of contracts for a given project, in which the applicable contractor's bid will be reviewed and discussed. Conceptual MBE/WBE work plans may also be discussed at said meeting.

Pre-bid Meeting – Meeting conducted by Owner's Representative and Engineer, prior to a given project's scheduled bid opening date, for the purpose of providing a project overview and allow contractors and other interested parties an opportunity to submit questions and review project details.

Pre-construction Meeting – Meeting conducted by Owner's Representative and Engineer, after the applicable Contract Documents are executed and prior to actual physical construction of a given project, in which project logistics, expectations, and responsibilities will be reviewed and adopted.

Project – The Public Improvement to which the Contract Documents relate, of which the total construction of the Work under the Contract Documents may be the whole, or a part.

Project Labor Agreement (PLA) – The labor agreement negotiated and executed between the Construction Project Manager and the various unions which will participate in certain construction and repair work to be performed on the ACJ Lake Improvement Project and which is attached as Appendix F to the Information For Bidders.

Project Specific Safety Plan – A site safety plan unique to each project site, prepared by the Contractor, that outlines the Contractor's methods and procedures for maintaining the site in a safe, neat and orderly condition.

Pronouns, Plurals, and Gender – All pronouns used in these Contract Documents shall be deemed to refer to the masculine, feminine, neuter; and the singular form of nouns, pronouns, and verbs shall include the plural and vice versa, whichever the context would require.

Radioactive Material – Source, special nuclear, or byproduct material as defined by the Atomic Energy Act of 1954 (42 USC Section 2011 et seq.) as amended from time to time.

Recovery Schedule – Supplemental schedule prepared and submitted by the Contractor identifying the Contractor's plan to achieve project milestones. A recovery schedule will be prepared at the Construction Project Manager's request when it appears that the Work will not be completed on time, or a project milestone will not be met.

Samples – Physical examples of materials, equipment, or workmanship that are representative of some portion of the Work and which establish the standards by which such portion of the Work will be judged.

Shop Drawings – All drawings, diagrams, illustrations, schedules and other data or information which are specifically prepared or assembled by or for the Contractor and submitted by the Contractor to illustrate some portion of the Work. Shop Drawings include the following: Preprinted material such as illustrations, standard schedules, performance charts, instructions, brochures, diagrams, manufacturer's descriptive literature, catalog data and other data to illustrate a portion of the Work, but not prepared exclusively for this Contract. Drawings, schedules, diagrams, and other data prepared specifically for this Contract, by the Contractor or through the Contractor by way of a subcontractor, manufacturer, supplier, distributor, or other lower tier contractor, to illustrate a portion of the work.

Site – The lands or area upon which the Work is to be performed. The limits of such lands or area may be indicated elsewhere in the Contract Documents.

Special Project Conditions – The part of the Contract Documents which amends or supplements the General Provisions or General Specifications.

Specifications – Those portions of the Contract Documents consisting of written technical descriptions of materials, equipment, construction systems, standards and workmanship as applied to the work and certain administrative details applicable thereto.

Subcontractor – An individual, firm or corporation having a direct contract with the Contractor or with any other subcontractor for the performance of a part of the work. Whenever the word Subcontractor appears, it will also mean all tiers of subcontractors and suppliers.

Substantial Completion – The written determination by the Owner's Representative that the work required under this Agreement is substantially complete in accordance with the Contract Documents, including Section G-6.07C of the General Provisions. The existence of minor or incidental items of work shall not affect or impede the Owner's full use of the work, as determined by the Owner's Representative.

Substitution – A piece of equipment proposed by a Prime Contractor for use as a specific project component which is equal to or substantially different from that described in the Contract Documents' Technical Specifications that has been approved by the Engineer for substitution. Nothing herein shall relieve the Contractor from its obligations and responsibilities to perform in accordance with the Contract Documents.

Supplier – A manufacturer, fabricator, supplier, distributor, materialman or vendor having a direct contract with the Contractor or with any subcontractor to furnish materials or equipment to be incorporated in the work by the Contractor or any subcontractor.

Underground Facilities – All pipelines, conduits, ducts, cables, wires, manholes, vaults, tanks, tunnels or other such facilities or attachments, and any encasements containing such facilities which have been installed underground to furnish any of the following services or materials: electricity, gases, steam, liquid petroleum products, telephone or other communications, cable television, sewage and drainage removal, traffic or other control systems or water.

Unit Price Work – Work to be paid for on the basis of unit prices.

Work or work – All services, materials and equipment required to complete the Project in accordance with the Agreement and Contract Documents, including without limitation, the entire completed construction or the various separately identifiable parts thereof required to be furnished under the Contract Documents. Work includes and is the result of performing or furnishing labor and furnishing and incorporating materials, superintendence, management, administration, equipment and incidentals into the construction, and performing or furnishing services, materials, equipment and documents, all as required by the Contract Documents.

Work Terminology – The following definitions shall apply to the Contract Documents:

1. Furnish: To supply required materials and equipment at the project site.

2. Install: To place and/or assemble furnished materials and equipment in secured position for the use intended.

3. Provide: The act of both furnishing and installing.

4. Products: New material, machinery, components, equipment, fixtures, and systems forming the work. It does not include machinery and equipment used for preparation, fabrication, conveying, and erection of the work. Products may also include existing materials or components, if specifically identified for reuse in the Contract Documents.

Written Amendment – A written amendment of the Contract Documents, signed by the Owner and the Contractor on or after the effective date of the Agreement.

INFORMATION FOR BIDDERS

SECTION 1 – PROJECT INFORMATION

I-1.01. Commencement and Completion.

Upon execution and delivery of the Contract, and the delivery of the required submittals by the Contractor to the Owner and the approval thereof by the Owner's attorney, the Contractor will be notified to proceed with the work of the Contract. Such notification will be in the form of the delivery of an executed Notice to Proceed to the Contractor. The Notice to Proceed will only be issued when the Contract is fully executed and all insurance, bond and M/WBE Utilization submittals are approved. Notification shall be presumed to have taken place one (1) day after the date of the Notice to Proceed, addressed to the Contractor at the address specified in his Bid. The work of the Contract shall be commenced within ten (10) days following such notification.

The Contractor shall notify the Owner, in writing, of his intention to enter upon the site(s) of the work at least five (5) days in advance of such entrance.

All work of the Contract shall be completed within the time frame specified in these Contract Documents' Special Project Conditions. Time is of the essence. Charges for failure to complete the Contract within the time specified are set forth in Section 4 of the General Provisions, Section I-6.03 of this Information For Bidders, and the Special Project Conditions as applicable.

I-1.02. Existing Conditions and Subsurface Conditions.

It shall be the Contractor's obligation to satisfy himself as to the nature, character, quality and quantity of subsurface conditions likely to be encountered. Any reliance upon the subsurface information made available by the Owner or the Engineer shall be at the Contractor's risk.

Certain subsurface information may be shown on separate sheets or otherwise made available by the Owner or Engineer to Bidders, Contractors, and other interested parties. Neither such information nor the documents on which it may be shown shall be considered a part of the Contract Documents or Contract Drawings, it being understood that such information is made available only as a convenience, without express or implied representation, assurance, or guarantee that the information is adequate, complete, or correct, or that it represents a true picture of the subsurface conditions to be encountered, or that all pertinent subsurface information in the possession of the Owner or Engineer has been furnished. The Contractor must interpret such information according to his own judgement. Subsurface information in the possession of the Engineer may be examined by making an appointment with the Engineer.

It shall be the obligation of the Contractor to inquire of the Owner and Engineer whether pertinent subsurface information has been obtained by the Owner with respect to the Work.

The Contractor agrees that he shall not have nor assert against the Owner or Engineer any claim for damages for extra work or otherwise or for relief from any obligation of this Contract based upon the failure by the Owner or Engineer to obtain or to furnish additional drawings or information or to furnish all drawings and information in the Owner's or Engineer's possession or based upon any inadequacy or inaccuracy of the drawings or information furnished, other than the Contract Documents.

Any holder of Contract Documents will be permitted to inspect the site of the work; verify existing architectural, structural and mechanical systems and finishes; make test borings, test pits, soundings, and any other testing or inspection on the site of the Work if he so desires subject to his first obtaining approval from the Owner and any necessary permits from applicable agencies. It is understood that the party or parties receiving such approval must assume all risks and liabilities contingent thereto and shall restore the area to the satisfaction of the Owner and any permitting authority.

In the event existing conditions are found to be materially different from those represented in the Contract Documents the Contractor shall proceed in accordance with Section 5 - Changes, of the General Provisions.

I-1.03. Index of Drawings.

A list of Contract Drawings is given in the Table of Contents, whether bound herein or bound separately.

I-1.04. Contract Drawings Furnished to Bidders.

During the period between Advertisement for Bids and Opening of Bids, each prospective Bidder will be furnished, upon payment of the amount specified in the Advertisement, with a set or sets of Contract Documents.

Where Contract Drawings have been reduced from the full size tracings, the sets furnished to prospective Bidders will be reduced sets. The Bidders are cautioned against scaling distances from such drawings, except through the use of graphic scales shown thereon.

I-1.05. Contract Drawings Furnished to Contractors.

Each Prime Contractor will be furnished, free of charge, three (3) sets of full size Contract Drawings.

I-1.06 Taxes.

The County of Onondaga is exempt from the payment of Federal, State and local taxes and Sales and Compensating Use Taxes of the State of New York and of cities and counties on all materials, equipment and supplies to be incorporated in the work or to be furnished to the Owner pursuant to this Contract, whether purchased by the Contractor or his subcontractors or vendors. These taxes are not to be included in the Bid.

This exemption does not, however, apply to tools, machinery, equipment, temporary structures, materials, fuel and lubricants, supplies or any other items or services purchased, rented or leased by the Contractor or his subcontractors and used by him for the performance of the work and/or which will not become the property of the Owner upon completion of the Contract. The cost of any taxes on these items, and all other taxes for which the Contractor is liable, shall be borne by the Contractor and shall be included in the Bid and no separate payment will be made therefor.

INFORMATION FOR BIDDERS

SECTION 2 – INSTRUCTIONS TO BIDDERS

I-2.01. Qualifications of Bidders.

The Owner may make such investigation as he deems necessary to determine the ability of the Bidder to perform the work, and the Bidder shall furnish to the Owner all such information and data for this purpose as the Owner may request. The Owner reserves the right to reject any bid if the evidence submitted by or investigation of such Bidder fails to satisfy the Owner that such Bidder is properly qualified to carry out the obligations of the Contract, and to complete the work contemplated therein. Conditional bids will not be accepted.

I-2.02. Bidder's Responsibility.

At the time of the opening of bids, each Bidder will be presumed to have inspected the site of the proposed work and adjacent areas and to have read and to be thoroughly familiar with the Contract Documents. The failure or omission of any Bidder to receive or examine any form, instrument or document shall in no way relieve any Bidder from any obligation in respect to his Bid.

I-2.03. Addenda and Interpretation.

No interpretation of the meaning of the Plans, Specifications or other portion of the Contract Documents will be made orally. Every request for such interpretation must be addressed to the Engineer identified in the Special Project Conditions, and to be given consideration must be received by him at least nine (9) business days prior to the date fixed for the opening of bids. Any and all such interpretations and any supplemental instructions will be made in the form of written addenda, which, if issued, will be sent by certified mail, with return receipt requested to all holders of Contract Documents at the respective addresses furnished for such purposes not later than seven (7) days prior to the date fixed for the opening of bids. Addenda may also be sent by facsimile or electronic mail, with a follow-up copy sent by mail. Failure of any Bidder to receive any such addenda or interpretation shall not relieve said Bidder from any obligation under his Bid as submitted. All addenda so issued shall become part of the Contract Documents.

I-2.04. Bid Instructions.

All blank spaces in the Bid Forms must be appropriately filled in with ink and with both words and figures, and the Bid must be properly and completely executed.

Do not remove the Bid Forms from this Book. All Contract Documents, except the separately bound Contract Drawings, must be submitted with the Bid. Contract Documents are defined in the Agreement.

A statement of Surety's Intent is required to be submitted by all bidders regardless of the type of bid security that is furnished.

I-2.05. Bid Security.

Each bid must be accompanied by cash or by the certified check of the bidder or by a bid bond acceptable to the County, and such check or bid bond shall be made payable to the County in an amount not less than five percent (5%) of the amount of the bid.

Where alternate items are included in the Bid, the amount of bid security shall be not less than five percent (5%) of the alternate, or combination of alternates, that results in the highest bid.

The bid security will be returned after the Contract is executed or, if no award is made, after all bids are rejected.

I-2.06. Discrepancy in Bids.

In the event there is a discrepancy or arithmetical error in any Bid between the unit prices and the extended totals, the unit prices shall govern. In the event there is a discrepancy in any Bid between the unit or lump sum prices written in figures and the unit or lump sum prices written in words, the unit or lump sum prices written in words shall govern. In the event there is a discrepancy between the arithmetically correct sum of the payment items, comprising the total Bid, and the amount entered as the total Bid by the Bidder, the arithmetically correct sum shall govern. Consistency between the Total Bid Prices written in words and figures will not relieve the bidder from the correction procedures outlined herein.

Discrepancies shall be corrected by entries made on the Tabulation of Bids received by the Owner and only the corrected Bid will be considered in determining the lowest Bidder. Discrepancies will be corrected in the following order:

1) Unit and lump sum prices bid will be checked. If the unit or lump sum price written in words is not consistent with the price written in figures, the price in figures will be corrected to match the price written in words.
2) Arithmetical errors in the extended totals will be corrected based upon the unit price.
3) Arithmetical errors in calculating the Total Bid Price will be corrected.

Bids which do not contain a price for every numbered item on the Bid form will not be accepted, except that where the Bid form specifically provides for alternate Bids. Bidders are not required to bid on every alternate.

I-2.07. Lowest Bidder.

Bids will be compared on the basis of the correct total Bid, after corrections are made in accordance with I-2.06 Discrepancies in Bids. As such, the lowest Bid will be that correct Bid which is for the lowest number of dollars. Where the Bid form specifically provides for alternate Bids, the lowest Bid will be the alternate selected by the Owner, or combination of alternates selected by the Owner, which is for the lowest number of dollars.

I-2.08. Award of Contract.

The award of the Contract will be made to the low, responsive, responsible Bidder who, in the opinion of the Owner, is qualified to perform the work required and is responsible and reliable.

The Owner may conduct such investigations as the Owner deems necessary to assist in the evaluation of any Bid and to establish the responsibility, qualifications and financial ability of Bidders to perform and furnish the work in accordance with the Contract Documents, to Owner's satisfaction. The Owner may require the lowest Bidder to submit references or other information which will assist in the investigation and evaluation.

It is the intention of the Owner that the work will be awarded within forty-five (45) calendar days after the opening of bids to the lowest responsible Bidder or combination of lowest responsible Bidders whose bids conform to the requirements of the Bidding Contract Documents.

The right is reserved to reject any bid or all bids and to waive any informality in any bid received.

I-2.09. Liquidated Damages for Failure to Execute Contract.

The successful Bidder, upon his failure or refusal to execute and deliver the Contract and required bond, together with all policies, certificates of insurance within fourteen (14) days after he has received notice of acceptance of his bid, shall forfeit to the Owner, as liquidated damages for such failure or refusal, the security deposited with the bid.

The contract will not be executed by the County until the M/WBE Utilization Plan is approved by the County. If the successful bidder fails or refuses to provide an approvable M/WBE Utilization Plan, such bidder shall forfeit to the Owner, as liquidated damages for such failure or refusal, the security deposited with the bid.

I-2.10. Prior Approval of Equipment, Methods or Materials.

There will be no consideration or approval given by the Owner or Engineer for any means and methods, materials, equipment or system prior to the award of the contract.

The Owner reserves the right to declare informal and to reject any Bid which is conditioned or qualified as to the use of a particular means and method, material, equipment or system, or otherwise.

I-2.11. Estimated Quantities.

If the Bid includes unit price items based on estimated quantities, it is understood that the quantities shown are included for the purpose of comparing bids only and may not be an accurate representation of the actual quantities which may be used during the course of the work. The Bidder, by submitting his Bid, agrees that he is satisfied with and will at no time dispute the estimated quantities stated in the Bid as a proper means of comparing bids.

I-2.12. Unbalanced Bids.

Bidder shall not submit unbalanced bids. Unbalanced pricing may increase performance risk and/or result in payment of unreasonably high prices and/or advanced payments. A bid is unbalanced if, in the County's opinion, the bid prices are materially unbalanced between line items or sub-line items. The County will consider the total Bid in determining whether or not the bidder has submitted a materially unbalanced bid. A bid will be deemed to be materially unbalanced when a bid is based on prices that are significantly less than the cost for that work, with other prices that are significantly overstated in relation to the cost for other work, and if there exists, or there may arise, a reasonable doubt that the bid would result in the lowest overall cost to the County, even though the bid may be the apparent

low bid. An unbalanced bid also includes bids which have the effect of advancing to the Contractor sums not equal to the work performed and unit prices which do not reflect the value of the units actually provided. A bid will also be deemed materially unbalanced when a bid is so structured as to be tantamount to allowing advanced payment(s).

If in the County's opinion an offer is materially unbalanced, the County will (i) consider any risks to the County associated with the unbalanced pricing; and (ii) consider whether award of the contract would result in payment of unreasonably high prices for contract work or materials or an advanced payment(s); and (iii) the County in its sole discretion shall be entitled to reject as non-responsive any Bid that the County considers to be a materially unbalanced bid.

INFORMATION FOR BIDDERS

SECTION 3 – ONONDAGA COUNTY MBE/WBE AND MINORITY WORKFORCE REQUIREMENTS

I-3.01 Minority/Women Business Enterprise and Workforce Requirements.

It is the policy of Onondaga County to foster the opportunity for utilization of firms certified as Minority Business Enterprises (MBE) and Women Business Enterprises (WBE) in the performance of all construction contracts funded by Onondaga County or eligible for aid from New York State or the federal government. It is the further policy of Onondaga County that the workforce employed by all contractors and subcontractors provide further opportunities for minority and women workforce participation. The Contractor is directed to Section 6 of the Information for Bidders for additional information regarding federal MBE/WBE requirements.

The following MBE/WBE and workforce participation goals have been established for this project:

MBE/WBE Goal (as a minimum % of total $ value of work):
- 10% MBE
- 5% WBE
- 15% Combined MBE/WBE

Minority/Women Workforce Participation Goal (as a % of total Workforce)
- 10% Minority
- 5% Women
- 15% Combined Minority/Women Workforce

To promote successful Contractor compliance with these goals, each bidder shall submit with his bid a "Conceptual M/WBE Work Plan" in a format as included in the Bid Section of these Contract Documents. The Conceptual M/WBE Work Plan shall indicate the Contract Name and Number, include a description of the scope of work and provide an estimated value of each portion of the contract work the bidder plans to subcontract to MBE or WBE firms. The total value of the work should be greater than or equal to the combined M/WBE Goal indicated above. Failure to provide the "Conceptual M/WBE Work Plan" with the bid may result in the bid being considered non-responsive.

The successful bidder will be required, upon notification by letter of the County's intent to award a contract (Letter of Intent), to document the bidder's good faith intent to achieve the goals established by the County and the Contractor. Documentation will include:

1. A written utilization plan to provide for the employment of qualified MBE/WBE firms (Form A).

2. A written utilization plan to provide for the employment of minorities and women (Form B).

Onondaga County will not enter into a contract with the successful bidder until satisfied appropriate efforts are planned or in place that will result in the bidder having a program aimed at meeting the percentage goals. Questions or concerns related to qualified MBE/WBE firms or plans to employ these firms or representatives should be directed to:

Contract Compliance Officer
Syracuse & Onondaga County Human Rights Commission
421 Montgomery Street
11th Floor Civic Center
Syracuse, New York 13202
(315) 435-8462
FAX# (315) 435-2439

The Letter of Intent to award a contract to the successful bidder will require submittal, to the Human Rights Commission (HRC), of the bidder's plan or program to comply with the County MBE/WBE and workforce participation policies. All of this documentation, as identified in I-3.02B below, is required **not later than seven days from the date of the Letter of Intent** (copy the Construction Project Manager with the transmittal to HRC). The HRC will approve or disapprove the bidder's plan in writing to the Construction Project Manager who will forward the approved plan, along with other required documents, to the County Law Department for contract execution.

The plan will be implemented in accordance with the Rules and Regulations of the Human Rights Commission.

The approved plan will become part of the final contract. Failure to comply with the plan and/or the Rules and Regulations of the Human Rights Commission will be grounds for default under the contract and termination or other remedy available to the County.

In addition, lack of compliance with the plan and/or the Rules and Regulations will be criteria for determining responsibility of bidders on future contracts with the County.

Upon contract signing, the contractor will be required to submit copies of executed contracts and purchase orders with MBE/WBE firms within 30 days of contract execution. The MBE/WBE Monthly Utilization Report (Form G), the Monthly Employment Utilization Report (Form I), certified payroll (every two weeks) and copies of canceled checks issued to MBE/WBE subcontractors and suppliers must be submitted with the monthly applications for payment. Failure to submit the required forms could result in delays in processing payments.

The Human Rights Commission maintains a listing of MBE/WBE firms and also provides advice and assistance to bidders and potential bidders seeking construction contracts with Onondaga County. Refer to "Special Provisions Concerning Utilization of M/WBE and Minority and Female Workforce Requirements" for program rules and regulations.

The Human Rights Commission is available for consultation to prime contractors and their M/WBE officers regarding the requirements for the development of their M/WBE-EEO participation program.

I-3.02 Summary of Forms. (Included in Appendix A, except as otherwise noted)

A. Each bidder must submit the following information at the time of bid submittal:

Conceptual M/WBE Work Plan - Included in Bid Section of Documents

B. The successful bidder must submit the following information to the Contract Compliance Officer with copies to the Construction Project Manager no later than seven days from the

date of the Letter of Intent to award the contract. The Contract will not be executed by the County until the following documents are received and approved by the Human Rights Commission:

Form A - Contractor's detailed MBE/WBE Utilization Plan

Form B - Contractor's Workforce Utilization Plan (including Workforce Listing, Form B1)

Form D - Minority/Women Contractors Participation Letter of Intent

Form H - HRC-1 Form

C. Upon signing of contract, the contractor must submit the following to the Contract Compliance Officer with copies to the Construction Project Manager on a monthly basis (unless otherwise noted):

Form G - MBE/WBE Monthly Utilization Report - due monthly with each payment request

Form I - Monthly Employment Utilization Report - due monthly with each payment request

Certified Payroll - due every two weeks

MBE/WBE Canceled checks (previous month) - due monthly with each payment request

Signed Contracts/Purchase Orders with MBE/WBE Firms – 30 days after contract signing.

D. The contractor should utilize the forms or format below to demonstrate good faith effort:

Form C – Contractor's Solicitation Letter (should be sent to M/WBE's a minimum of 20 days prior to bid)

Form E - MBE/WBE Contractor Participation Bid Proposal (should be returned by M/WBE a minimum of five (5) days in advance of the receipt of bid).

Form F - Minority/Women Contractor Unavailability Certificate (submit w/Form A).

I-3.03 Special Provisions Concerning Utilization of M/WBE and Minority and Female Workforce Requirements.

The County of Onondaga has developed a program to foster the opportunity for Minority Business Enterprise (MBEs) and Women Business Enterprises (WBEs) to participate in the performance of construction contracts.

The County of Onondaga is committed to a policy of promoting MBE/WBE participation in its contracts and fully intends to enforce the requirements for MBE/WBE utilization.

The general requirements for MBE/WBE utilization are contained in this document and in the New York State Minority/Women Business Enterprise Requirements and Minority and Female Workforce documents. Contractors are to familiarize themselves with the details of these requirements as set forth in this document.

A. MINORITY/WOMEN BUSINESS ENTERPRISE GOAL

MBE/WBE Goal: The successful bidder on each prime contract will be expected to attain a goal of utilization of MBEs/WBEs to provide services and/or products, the total amount of which shall be equal to at least ten percent (10%) for MBEs and five percent (5%) for WBEs of the total amount bid for this contract. In any event, at least a fifteen- percent (15%) combined Minority and Women Business Enterprise goal should be achieved.

In administering this goal, the County will require each Minority/Women Business Enterprise to be certified as a bona fide MBE/WBE under the Statewide Certification Program. Firms currently seeking certification (having a pending application on file with Empire State Development Corporation), may be considered pending a satisfactory desk review of such application. Lists of MBE/WBE firms shall be made available at the County's offices. Bidders should be aware that the County of Onondaga does not have its own program or procedure for "certifying" MBEs/WBEs, and that the State certification program is used as the basis of the local program. Certification by other agencies or governments will not be acceptable for compliance with the County of Onondaga's MBE/WBE program.

The goals established for this project can be achieved by MBE/WBE participation as subcontractors, lower tier subcontractors, or suppliers subject to the conditions as noted below; provided the MBE/WBE firm provides a commercially useful purpose as defined herein.

Supply Policy: Suppliers shall receive 25 percent credit if they only provide supplies, and do not manufacture or fabricate them. Suppliers shall receive 100 percent credit for items they supply that they also manufacture or fabricate. A "supplier" is a business that distributes materials or equipment and which provides a commercially useful function when such activity is traditional in the industry producing the material or equipment that is supplied. "Commercially useful functions" of suppliers normally include:

1) Providing technical assistance to a purchaser prior to a purchase, during installation, and after the supplies or equipment are placed in service;

2) Manufacturing or being the first tier below the manufacturer of supplies or equipment; or

3) Providing functions other than just accepting and referring requests for supplies or equipment to another party for direct shipment to a contractor.

Notification of MBEs/WBEs by County of Onondaga: Prospective bidders are advised that the County Contract Compliance Officer has provided potentially interested local MBEs/WBEs with a copy of the notice to contractors published for this contract, together with a supplementary information form which describes the project and its major components in more detail. Therefore, local potentially interested MBE's/WBE's are aware that bids for this contract are being solicited.

Prospective bidders are advised that notification of potentially interested MBE's/WBE's by the County of Onondaga does not constitute verification of the respective certification status of such firms. While the County of Onondaga endeavors to maintain updated lists, it is the responsibility of prospective bidders to ascertain, on a case by case basis, whether or not potentially interested MBE's/WBE's are currently certified under the Statewide Certification Program. Contact Empire State Development, Division of Minority and Women business Development at (800) 782-8369

to confirm current State Certification status.

Pre-Bid Meeting: A meeting will be scheduled prior to the bid opening to discuss the project and review contract requirements with all prospective bidders. This review will describe the County of Onondaga's bid procedures including requirements pertaining to the MBE/WBE program and minority and women workforce participation. If not already stated in the special provisions, all registered holders of bidding documents will be advised of the time, date and place of the Pre-Bid meeting by Addendum.

Bidder's Responsibilities/Good Faith Effort: It is the responsibility of the prospective bidder to follow and abide by the procedures and requirements contained in this section of the "Information for Bidders". The bidder is responsible for segmenting portions of the contract for award to qualified bona fide MBE/WBE contractors and vendors as necessary in order to achieve the MBE/WBE utilization goal.

In soliciting proposals from MBE's/WBE's for participation on this contract, the bidder is responsible, as part of its good faith effort toward achieving the MBE/WBE utilization goal, to insure that MBE/WBE firms have been given every opportunity to submit timely and competitive proposals. The aforementioned can be achieved by the following actions.

1) Making plans and specifications available to prospective MBE's/WBE's in sufficient time to allow appropriate review for the purpose of submitting a responsible proposal.

2) Utilizing the qualified MBE's and WBE's on the list of certified firms maintained by the County Human Rights Commission and/or the NYS Department of Economic Development for the purpose of soliciting bids for sub contracts.

3) Maintaining records, including detailed telephone logs, detailing the efforts made to involve MBE's and WBE's, including the names and addresses of MBE's and WBE's that were contacted and, if not selected, reasons for such decisions.

4) Making contact with Minority and Women subcontractors through newspapers ads in minority owned and traditional newspapers, letters to minority and women contracting associations, and letters to minority and women subcontractors (certified, return receipt requested).

In the event the prospective bidder is unable to achieve the MBE/WBE utilization goals because proposals submitted by MBE's/WBE's were not competitive, the County may, at its discretion, proceed to award a contract upon demonstration of the bidder's good faith effort. Demonstration of good faith effort shall include submission of a copy of the bidder's original worksheet for subcontractor bids received prior to the bid date for the contract which stipulates company, date, proposed bid amount, work to be performed, and submitting officer for subcontracting company. In instances where the bidder has failed to meet the MBE/WBE goal under its usual company procedures, bidders should modify solicitation and price negotiation procedures and/or implement negotiating procedures recommended by the County's Contract Compliance Office. In the event the goal will not be achieved, as part of the bidder's documentation of good faith effort, the bidder must be able to document its attempts to solicit proposals from all MBE's/WBE's in the Central New York area available to do the work in question, and that the MBE's/WBE's were quoting on the same Work and under the same conditions as non MBE's/WBE's. Bidders should utilize negotiation to achieve an acceptable price. Non-competitive pricing without negotiation shall not

constitute a basis for not achieving said MBE/WBE goals.

It is the bidder's responsibility to insure the MBE/WBE firms to be utilized on this contract are capable of satisfactorily performing the work subcontracted to them and of complying with all applicable provisions of the contract documents. The bidder, if successful, will be expected to provide all support, assistance and supervision necessary to assure satisfactory performance of MBE's/WBE's work and completion of the project in accordance with the contract documents. In the event the bidder intends to utilize an MBE/WBE inexperienced in the type of work to be subcontracted to it, the bidder shall notify the County Contract Compliance Officer in order to secure his prior approval. Successful bidder shall not knowingly enter into a subcontract with Minority/Women business firms that said contractor has knowledge that the price submitted is deficient when compared to the cost of material, cost of labor, insurance and minimum margin of profit on this project. It is the bidder's further responsibility to propose and utilize MBE/WBE firms for a commercially useful purpose on the project.

Commercially Useful Purpose: The intent of the MBE/WBE program is to increase the utilization of MBE's/WBE's on construction projects and to provide an opportunity for new MBE's/WBE's as well as existing MBE's/WBE's to develop experience and business acumen. In order to accomplish this intent and prevent "sham" or "brokering" operations, MBE/WBE firms utilized in compliance with this program must provide a commercially useful purpose on the project. A commercially useful purpose is defined as providing goods and/or services which make a tangible contribution to the completion of the project in a manner consistent with the standard business and construction industry practices and which involves or requires substantial responsibility on the part of the provider of the goods or services. No credit will be given for an MBE or WBE acting merely as a passive conduit of funds to a non-MBE/WBE.

The County Contract Compliance Officer will evaluate the performance of the conditions under which MBE's/WBE's are providing a commercially useful purpose. This evaluation will be based upon on-site observations and documentation which shall be submitted by the MBE/WBE and/or the contractor, as requested by the Contract Compliance Officer.

Among the factors to be evaluated are that the MBE/WBE made the necessary administrative and technical preparations to provide the indicated goods or services, and possesses the technical, administrative, managerial and supervisory capability and the resources to provide the indicated goods or services, including necessary labor, material and equipment, or the means of obtaining same in accordance with standard industry practices. The determination of commercially useful purpose will also include an evaluation of the MBE's/WBE's independence and responsibility for satisfactorily and successfully providing the indicated goods or services and whether or not the MBE/WBE will gain meaningful experience in the course of providing the indicated goods and services.

Post Bid Meeting: A post bid meeting may be scheduled by the Construction Project Manager a few days after the bid opening date to review bid and contract requirements with the apparent low bidder. The bidder should be prepared to discuss the conceptual M/WBE work plan submitted with the bid at this meeting. After this meeting, upon documentation of the Contractor's acceptability by the Construction Project Manager, the County will issue a Letter of Intent to award the contract. **The bidder will have seven days from the date of the Letter of Intent to submit a responsive MBE/WBE Utilization Plan** (Form A).

MBE/WBE Utilization Form: Appendix A to the Information for Bidders contains a Minority Business Enterprise/Women Business Enterprise Utilization Form which must be completed, signed by the authorized representative of the bidder, notarized and submitted no later than the date indicated herein. If the MBE/WBE Utilization Form submitted by the apparent low bidder reflects MBE/WBE utilization less than the goal oriented percentages specified herein, the bidder will be required to demonstrate that it has met the good faith effort requirements, and must produce respective documentation for review by the County Contract Compliance Office.

If the determination is made by the County of Onondaga that the bidder's efforts do not constitute a good faith effort, the County may reject the bid and offer the contract to the next lowest responsible bidder, or may reject all bids and re-advertise the contract.

The County may, at its discretion, as provided for under Bidder's Responsibilities, determine that a good faith effort was made by the low bidder to achieve said goal and accept the bid although it contains less than the percentage goals.

The MBE/WBE utilization plan submitted by the selected contractor will be reviewed by the County Contract Compliance Officer. Each of the MBE/WBE firms listed on the MBE/WBE utilization form will be contacted by the MBE Officer to verify that the MBE's/WBE's are aware of their intended utilization on the contract, for the indicated work, and for the indicated amount, and to ascertain that the MBE/WBE will be performing a commercially useful purpose on the project.

The completed and approved MBE/WBE Utilization Plan will become part of the contract and the contractor will be expected to utilize the minority/women owned businesses listed on the Form to a minimum of the amount indicated thereon. Any proposed changes must have the prior approval of the County Contract Compliance Officer. An amended Utilization Plan shall be prepared by the Contractor and submitted to the County Contract Compliance Officer upon County approval of any proposed changes.

Contract Compliance: The contractor shall appoint an Officer of the Corporation or principal of the firm whose responsibility it will be to keep the company informed of all County and State requirements pertaining to the MBE/WBE program and to compile, maintain, and submit all required documentation. As soon as possible after contract execution, the contractor shall submit to the County Contract Compliance Officer one (1) fully executed copy of each subcontract and/or purchase order involving an MBE/WBE. These documents shall clearly indicate the nature and scope of work to be performed by the MBE/WBE, designate the responsibility of the contractor and MBE/WBE for providing labor, equipment and materials, establish the amounts to be paid and retained, the schedule or method of payments, establish actual or projected starting and completion dates for the MBE's/WBE's work and clearly state any and all other forms and conditions agreed to by the contractor and MBE/WBE necessary for the proper conduct of business.

The subcontract information, submitted to the County of Onondaga to demonstrate compliance with the Minority/Women Business Enterprise program requirements, shall contain all agreements, both verbal and written, between the contractor and the minority/women owned firm and no other agreement shall exist, either expressed or implied, between the parties. The County of Onondaga's Contract Compliance Officer shall be informed in writing, with the appropriate supporting documentation, of any changes, additions and/or deletions to the executed MBE/WBE subcontracts.

The contractor will be required to submit, on a monthly basis, the minority and women business enterprise utilization report (Form G) supplying all the information requested thereon. This report shall be submitted to the Human Rights Commission, attention: Contract Compliance Officer.

The County of Onondaga reserves the right to re-evaluate MBE's/WBE's during the course of the project to ascertain that the MBE's/WBE's status and conditions of utilization on the contract remain as originally presented.

Non-compliance: If there is reason to believe that the contractor has failed to comply with the MBE/WBE requirements of this contract, or if the contractor fails to submit copies of MBE/WBE subcontracts and/or purchase orders, or if the contractor fails to respond to requests for additional information or documentation made by the County Contract Compliance Officer to ascertain compliance, the County of Onondaga may withhold the entire amount of payments for work completed and/or materials otherwise due to the contractor, until such time as the contractor has demonstrated to the satisfaction of the County Contract Compliance Officer that it is in compliance with the MBE/WBE Provision of this contract. If in the opinion of the County Contract Compliance Officer, the contractor is failing to make timely and satisfactory progress toward resolving MBE/WBE noncompliance, the County of Onondaga may direct that work on the contract be stopped so that opportunities for additional MBE/WBE utilization will not be exhausted.

If the contractor fails to utilize all the minority/women owned firms listed on the MBE/WBE Utilization Form, or fails to utilize such firms in the manner and to the extent indicated on the form, or if the status of the MBE/WBE firm utilized changed or is found to be different from the status presented or determined prior to the contract award, or if the contractor otherwise fails to comply with the intent of the MBE/WBE requirements, the contractor shall be in default of its contract and the County of Onondaga may pursue the remedies available to it under the applicable provisions of the contract documents, unless the contractor can successfully demonstrate that its failure to comply is due to a failure on the part of the minority/women-owned business to participate as originally agreed. At the sole discretion of the County of Onondaga, a condition of MBE/WBE non-compliance may be remedied in any manner acceptable to the County of Onondaga and agreed to in writing by the contractor, in lieu of declaring the contractor to be in default and terminating the contract.

Waiver of Claims: Upon submitting a bid for this contract and, if successful, upon executing this contract, the contractor waives any and all claims for damages or extra costs or unrealized or lost revenue or profit or interest on monies withheld arising out of the County of Onondaga's MBE/WBE program.

B. MINORITY AND FEMALE WORKFORCE UTILIZATION REQUIREMENTS

Minority and Women Workforce Goal: All contractors and their subcontractors shall achieve a workforce participation of ten percent (10%) minority and five percent (5%) female, respectively and in any event fifteen percent (15%) overall. "Minority/Female workforce participation" shall mean the aggregate number of person hours worked by minorities/females (including supervisory personnel) with respect to any work in connection with this agreement.

For purposes of this goal, "Minority" shall mean:

1. Black persons having origins in any of the Black African racial groups not of Hispanic Origin;

2. Hispanic persons of Mexican, Puerto Rican, Dominican, Cuban, Central or South American of either Indian or Hispanic origin, regardless of race;

3. Asian and Pacific Islander persons having origins in any of the Far East, Southeast Asia, the Indian Subcontinent, or the Pacific Islands; and

4. American Indian or Alaskan Native persons having origins in any of the original peoples of North America and maintaining identifiable tribal affiliations through membership and participation or community identification.

The minority/female workforce participation percentages shall be determined by dividing the minority/female workforce participation by the total workforce participation.

For the purposes of this subparagraph, "Total workforce participation" shall mean the aggregate number of person hours worked (including training) by all workers in the building trades (including supervisory personnel) performing work pursuant to this contract. The specific goal for each skilled and unskilled building trade shall be no less than ten percent (10%) minority and no less than five percent (5%) female, and in any event, no less than fifteen percent (15%).

Bidder Responsibilities: Prospective bidders should review the workforce requirements of this project and be prepared to demonstrate their intent to comply with this requirement. The County of Onondaga's Contract Compliance Office shall review the anticipated workforce requirement with the bidder and determine whether its bid is responsive to all Affirmative Action Requirements of this project. The bidder shall complete the HRC-1 Form (Form H) and the contractor's Workforce Utilization Plan (Form B). The Workforce Utilization Plan shall indicate what positions will be allocated to minorities and females in compliance with the percentage goals of this contract. This Form shall be submitted prior to or no later than the date indicated on the Letter of Intent. The County of Onondaga may, at its discretion, waive this requirement in whole or in part if after evaluation of the contract, it is found to be not conducive to providing employment opportunities to the extent required. Contractors may seek consideration of a reduction in the goal after all reporting requirements have been satisfied.

C. SANCTIONS FOR NON-COMPLIANCE

In the event the contractor fails to comply with these provisions (for MBE/WBE and workforce participation) the County may:

1. Require the contractor to attend a meeting with the Contract Compliance Officer, a representative of the State Agency, a project officer, a representative of the legal department, or any combination of the above as appropriate; and

2. Withhold payments of any amounts due pending resolution of non-compliance; and

3. After said meeting and a determination that the contractor has failed to comply with the appropriate provision, the Contract Compliance Officer of the County of Onondaga, the

Project Director, and the Department of Law may assess damages against a contractor who has failed to provide for minority/female employment or minority/women business participation as required and had failed to demonstrate a Good Faith effort to provide the same, in an amount equal to the dollar value that would have been realized by minority/female employees or minority/women businesses had the contractor so complied.

If such damages are assessed against a contractor, such assessment shall be withheld from any monies due the contractor, including retention funds; such determination in these matters shall be final.

Further, upon determination that the contractor has failed to comply with these provisions, at the direction of the County or State Agency, the Owner may suspend, cancel or terminate the contract without incurring any penalty or damage on account of such action and without any further liability, except that the contractor shall be entitled to be paid for the earned until the time that such action was taken.

D. NON-DISCRIMINATION REQUIREMENTS

The Contractor shall include all of the following paragraphs (1) through (5) with respect to the performance of its agreement with the County, in every subcontract it enters into for labor, services, supplies or equipment in such a manner that such provisions shall be binding upon all parties with whom such agreements are entered into:

1. Contractor shall not discriminate against an employee; or applicants for employment because of race, creed, color, national origin, ancestry, sex, age, disability or marital status and shall undertake programs of affirmative action to ensure that such employees and applicants are afforded equal employment opportunities without discrimination. Such action shall be taken with reference to, but not limited to, recruitment, employment, job assignment, promotion, upgrading, demotion, transfer, lay-off or termination, rates of pay or other form of compensation, and selection for training or retraining, including apprenticeship and on-the-job training.

2. If contractor is directed by the Owner or State Agency, contractor shall request each employment agency, labor union and authorized representation of workers with which it has a collective bargaining or other agreement or understanding, to furnish it with a written statement that such employment agency, labor union or representative shall not discriminate because of race, creed, color, national origin, ancestry, sex, age, disability or marital status and that such union or representatives shall affirmatively cooperate in the implementation of contractor's obligation hereunder.

3. Contractor shall state in all solicitations or advertisements for employees placed by or on behalf of the contractor that all qualified applicants shall be afforded equal opportunity without discrimination because of race, creed, color, national origin, ancestry, sex, age, disability or marital status.

4. Contractor shall comply with the provisions of the Civil Rights Law of the State, as outlined in Article 15A and Section 291-299 of the Executive Law of the State, Chapter 198, Laws of New York State, Executive Order was 11246, 11375, 11114, 11925 and Chapter I, of Title 4OCFR part 8; shall furnish all information and reports deemed necessary by the Owner and New York State Agency; and shall permit access to its books, records, and accounts by the

Owner and New York State Agency; and shall permit access to its books, records, and accounts by the Owner and New York State Agency having jurisdiction on this project for the purpose of monitoring compliance with these nondiscrimination clauses, Civil Rights Law and such sections of the Executive Law.

5. Contractor shall take such action in enforcing the foregoing provisions as the Owner and/or State Agency may direct, including sanctions and remedies for non-compliance. If contractor becomes involved in or is threatened with litigation with any party as a result of such direction, contractor shall promptly notify the Owner and New York State Agency which has jurisdiction of such fact and, thereafter, such parties may interface in such action.

I-3.04 Contractor Obligations.

This project may be funded through the NYSDEC Clean Water/Clean Air Bond Act (or other sources); USEPA State, Tribal and Government (STAG) grant; American Recovery and Reinvestment Act (ARRA); and/or U.S Army Corps of Engineers. Further, the County will arrange financing through the NYSEFC State Revolving Loan Fund. As such, all prime contractors shall be responsible for compliance will all applicable Onondaga County, New York State and federal government requirements regarding utilization of minority and women business enterprises and equal employment opportunities. Refer to the Special Project Conditions for identification of specific funding agencies, and Section I-6.04 for federal requirements and contract provisions as may be applicable to this project.

Contractors are herein advised that if you are the prime contractor and are either a Minority Business Enterprise (MBE) or a Women Business Enterprise (WBE), you are still required to comply with the above-stated MBE and WBE goals through the use of subcontractors.

Contractors are herein advised that they are solely responsible for compliance with the Minority and Women Workforce Goals. In the event that a local Union either fails, or is unable, to refer qualified minority or female applicants in percentages equaling Project affirmative action goals as set forth herein, the Contractor may employ qualified minority or female applicants from any other available source. The Contractor shall fully document all attempts to satisfy the workforce labor goals.

Contractors are herein advised that they are required to comply with the requirements of the USEPA Disadvantaged Business Enterprise (DBE) Program. Refer to the Addendum to the Minority & Women-Owned Business Enterprise – Equal Opportunity Program on the following pages. Forms referenced in the Addendum are provided in Appendix A of the Information for Bidders.

New York State Environmental Facilities Corporation
625 Broadway Albany, New York 12207-2997
(800) 882-9721 within New York State
(518) 402-7455 Fax (518) 402-7456

ADDENDUM TO THE MINORITY & WOMAN-OWNED BUSINESS ENTERPRISE - EQUAL EMPLOYMENT OPPORTUNITY PROGRAM
Compliance with the Disadvantaged Business Enterprise (DBE) Program of the Environmental Protection Agency (EPA)
April 2009

It is the policy of the EPA that recipients of financial assistance offer fair share opportunities for agreements and/or sub-agreements to disadvantaged, minority and woman-owned businesses. Recipients of EPA financial assistance are required to seek and encourage the utilization of disadvantaged, minority and woman-owned businesses when procuring services, equipment, supplies, and construction on projects receiving EPA financial assistance. The Environmental Facilities Corporation (EFC) endorses this policy. Implementation guidance for minority and woman-owned business participation is provided in the EFC document titled "Minority and Woman-owned Business Enterprise – Equal Employment Opportunity Program."

EFC encourages opportunities for Disadvantaged Business Enterprise (DBE) participation. DBEs are entities owned and/or controlled by a socially and economically disadvantaged individual as described by Title X of the Clean Air Act Amendments of 1990 (42 USC 7601 note) and Public Law 102-389 (42 USC 4370d). At this time, no fair share goal for DBE participation has been established.

The DBE Program includes provisions to ensure that disadvantaged, minority and woman-owned businesses are offered the opportunity to participate in SRF financed projects. Recipients should ensure and verify that contractors meet these provisions. Documentation verifying each activity identified below should be available for inspection by EFC staff.

To accomplish the objectives of the DBE Program, the following are required:

1) Recipient will need to post contract solicitations for a minimum of 30 days before bid or proposal closing date, whenever possible.
2) Recipients must ensure that each procurement contract contain the following statement concerning compliance.
    a. "The contractor shall not discriminate on the basis of race, color, national origin or sex in the performance of this contract. The contractor shall carry out applicable requirements of 40 CFR Part 33 in the award and administration of contracts awarded under EPA financial assistance agreements. Failure by the contractor to carry out these requirements is a material breach of this contract which may result in the termination of this contract or other legally available remedies."

In addition, recipients will need to require contractors to complete and submit forms as noted below. None of these forms are completed or submitted by the recipient. However, the recipient will need to maintain these forms and have them available for inspection. These forms are attached.

   a. EPA Form 6100-2, DBE Program Subcontractor Participation Form- This form is completed by the subcontractor and submitted to the EPA, Region 2, DBE Coordinator, 290 Broadway, 27th Floor, NY, NY 10007.
   b. EPA Form 6100-3, DBE Program Subcontractor Performance Form- This form is completed by the subcontractor and submitted to the recipient as part of the bid or proposal package.
   c. EPA Form 6100-4, DBE Program Subcontractor Utilization Form- This form is completed by the prime contractor and submitted to recipient as part of the bid or proposal package.

3) Recipients are required to create a bidders list and maintain the list on file for at least five years. The following information must be obtained from all firms that bid or quote on prime contracts or subcontract opportunities:
   a. Company name and contact person;
   b. Company's mailing address, telephone number, and email address;
   c. The contract on which the company bid, and when; and
   d. Company's status as an MBE/WBE/DBE or non-MBE/WBE.
4) The recipient must require the prime contractor to provide disadvantaged, minority and woman-owned businesses opportunities to participate in SRF financed projects.
5) The recipient must require the prime contractor to pay its subcontractor for satisfactory performance no more than 30 days from prime contractor's receipt of funds from the recipient.
6) The recipient must require the prime contractor to notify the recipient, in writing, prior to termination of a DBE subcontractor for convenience.
7) The recipient must require the prime contractor to undertake good faith efforts to replace an MBE or WBE firm with another MBE or WBE firm.
8) The recipient must require the prime contractor to continue to make good faith efforts after the fair share objectives have been met.

For MWBE information or assistance, please contact EFC at (800) 882-9721 or (518) 402-7396 or visit the website at www.nyscfc.org/mwbe.

INFORMATION FOR BIDDERS

SECTION 4 – INSURANCE AND BONDS AND HOLD HARMLESS, DEFENSE AND INDEMNIFICATION

I-4.01. Contractor's Obligations.

The Contractor's Obligations with respect to insurance, bonds, hold harmless, defense and indemnification are incorporated into Article 11 of the Agreement which is part of the Contract Documents to be executed by the Contractor and the County.

INFORMATION FOR BIDDERS

SECTION 5 – CONFLICT OF INTEREST

I-5.01. Contractor's Obligations

The Contractor's Obligations with respect to Conflicts of Interest are incorporated into Article 12 of the Agreement which is part of the Contract Documents to be executed by the Contractor and the County.

INFORMATION FOR BIDDERS

SECTION 6 – COUNTY, NEW YORK STATE, AND FEDERAL PROVISIONS

I-6.01 County Provisions.

It is the public policy of the County of Onondaga that prevailing wages and supplements in accordance with the New York State Labor Law be paid to all workers engaged to perform work under public works contracts with the County of Onondaga. The County of Onondaga reserves the right to consider evidence of a violation of the New York State Labor Law in connection with the award of contracts for public work or the approval of subcontractors in connection with such work. At the discretion of the County of Onondaga, a finding by the New York State Department of Labor of one willful violation of a provision of the New York State Labor Law shall constitute evidence and sufficient grounds for the denial of the award of such contracts. All departments are directed to report to the Department of Law any evidence of a violation of the labor laws by the apparent low bidder seeking award of a public contract.

In the event that the contractor shall fail to pay the prevailing wages and supplements in accordance with Article 8 of the New York State Labor Law, Section 220 et. seq., and as described in this contract, it shall be considered a material breach of contract.

For the breach or violation of this provision, without limiting any other rights, remedies or recovery to which the County or any individual may be entitled or any civil or criminal penalty for which any violator may be liable, the County shall have the rights, in its discretion to terminate this agreement immediately upon notice. In such event, the contractor shall be liable to the County for any additional costs or expenses incurred by the County in the completion of the project, and for any other recovery, costs and expenses to which the County may be entitled.

I-6.02 New York State Provisions.

The Contractor and every subcontractor shall comply with all applicable provisions of Article 8, Sections 220-223 of the New York State Labor Law, as amended, in accordance with the New York State Department of Labor Contract Requirements and Wage Rate Schedule, which is included herein and made a part hereof (Appendix C), including the submission of Certified Payrolls, as described therein, whenever work is in progress, and prior to processing of progress payments to the Contractor. Certified Payrolls shall be submitted bi-weekly regardless of whether progress payment applications are being made.

In the event the Wage Rates are redetermined by the Department of Labor, the new Prevailing Wage Rate Schedule shall become a part of the Contract at no additional cost to the County. It is the responsibility of the Contractor to determine appropriate wage rates in compliance with Article 8 of the New York State Labor Law and the PLA.

The Contractor and every subcontractor shall comply with the provisions of the following New York State clauses: "Standard Clauses for all New York State Contracts," and "Standard Clauses for all New York State Department of Environmental Conservation Contracts." The current published standard clauses at the time of the bid are included in Appendix D and E, respectively.

I-6.03 Amended Consent Judgment Project Conditions-Time is of the Essence.

This project is being constructed pursuant to the Amended Consent Judgment (ACJ) No.88-CV-0066 entered into pursuant to litigation, in furtherance of the public health and safety. The ACJ and each amendment thereto are incorporated into this Contract by reference, and are available for examination at the office of the Onondaga County Department of Water Environment Protection. This Agreement requires strict compliance with the ACJ milestone dates and time is of the essence in the commencement, prosecution and completion of the project. The current milestones for this project are identified in Special Project Conditions of these Contract Documents and in the ACJ as amended.

If it is determined by the Owner that the Contractor is in whole or in part responsible for delay of this project such that any milestone is missed, the Contractor shall be charged and/or payments withheld equal to any such fines or penalties enforced against the Owner as shown below. According to the ACJ, fines and penalties for the County's non-compliance with any of the ACJ milestones ("ACJ Penalties") are as follows:

Days after Compliance Date	ACJ Penalties
1 – 10	$ 500 per day
11 – 30	$ 1,500 per day
greater than 30	$ 5,000 per day

The above ACJ penalties will be assessed against the Contractor as liquidated damages in addition to the liquidated damages, assessments, costs and other damages set forth in the Special Project Conditions and Section 4 of the General Provisions.

I-6.04 Project Labor Agreement (PLA).

A PLA has been negotiated and executed by and between Camp, Dresser & McKee/C&S Engineers, Inc., A Joint Venture and the various unions which will participate in certain construction and repair work to be performed on the ACJ Lake Improvement Project. The work to be performed under this bid specification falls within the coverage of the PLA (see Appendix F). The PLA has been executed to promote labor harmony on the project, to expedite the construction process and reduce construction costs, to provide standardized terms and conditions of employment, flexibility in scheduling, enhancement of employment opportunities for minority, women, and disadvantaged persons and to minimize delays. Each successful bidder and any and all levels of subcontractor on the project, as a condition of being awarded a contract or subcontract for work within the coverage of the PLA, agrees to become signatory to, and to abide by, the provisions of the PLA, and will be bound by the provisions of the PLA in the same manner as any other provision of this Contract. The PLA is attached to and included as part of these Contract Documents. Besides Camp, Dresser & McKee/C&S Engineers, Inc., A Joint Venture, the signatories to the PLA are the Building and Construction Trades Department, AFL-CIO, the New York State Building Trades Council, the Syracuse Building and Construction Trades Council, on behalf of themselves and their affiliates and local union members, and by certain signatory local unions on behalf of themselves and their members in connection with certain construction and repair work to be performed on the ACJ Lake Improvement Project. Copies of the various Local Union Agreements referenced in the PLA are available for inspection at the County's Lake Improvement Project Office, Syracuse, New York.

In the event that the language of the PLA conflicts with the language contained in the Bid Documents and any provisions of the Contract Documents, the language in the PLA shall take precedent, except to the extent in violation of law, including but not limited to federal, and state laws, regulations, and rulings to the contrary. One copy of "Schedule A" to the Project Labor Agreement and one copy of the Trust Agreements, and the Plans of the jointly-trusted employee benefit funds referenced in "Schedule A" and

referred to in Article 11, Section 2A of the Project Labor Agreement are available at no cost to each holder of record of the bid and Contract Documents at the office of the Camp, Dresser & McKee/C&S Engineers, Inc., A Joint Venture.

I-6.05 Federal Requirements and Contract Provisions for the Appropriations Act Grants . (USEPA – Region 2)

The Federal insert (see Appendix G) contains the Agency's procurement regulations (40 CFR Part 31.36) and the Federal requirements and provisions for this construction contract.

Utilization of Minority (MBE) and Women's (WBE) Business Enterprises: The County requires successful bidders to utilize their best efforts to achieve goals for Minority Business Enterprises (MBE) and Women's Business Enterprises (WBE) participation on this project. For this project, the goals are a combined participation by MBE and WBE firms of 6% for construction and 8.8% for equipment, supplies and services. The successful bidders on this project will be required to take various affirmative steps to achieve these participation goals. The affirmative steps are described within the Federal insert (see Appendix G) at 40 CFR Part 31.36(c).

The selected contractor must sign and date the following forms: Notice to Labor Unions and Other Organizations of Workers Nondiscrimination in Employment (Attachment 2) and Certification of Nonsegregated Facilities (Attachment 3) which are part of this Federal insert.

I-6.06 Federal Requirements and Contract Provisions for the American Recovery and Reinvestment Act (ARRA) Fund Recipients

In addition to complying with all applicable provisions of Article 8, Sections 220-223, of the New York State Labor Law, as amended, in accordance with the New York State Department of Labor Contract Requirements and Wage Rate Schedule, all laborers and mechanics employed by contractors and subcontractors shall be paid wages not less than those prevailing on projects of a character similar in the locality as determined by the Secretary of Labor in accordance with subchapter IV of chapter 31 of title 40, United States Code (i.e., Davis-Bacon Act wage rates, included in Appendix H to this section, Information for Bidders). With respect to labor standards specified in this section, the Secretary of Labor shall have authority and functions set forth in Reorganization Plan numbered 14 of 1950 (64 Stat. 1267, 5 U.S.C. App.) and section 3145 of title 40 United States Code. All contract clauses included in 29 Code of Federal Regulations (CFR) 5.5 shall be included in this contract. The Davis-Bacon (DB) Prevailing Wage Requirements for ARRA Fund Recipients is included as Appendix H to this section, Information for Bidders.

The successful bidder will be required to conform to the wage requirements prescribed by the federal Davis-Bacon and Related Acts which require that all laborers and mechanics employed by the contractors and subcontractors performing on contracts funded in whole or in part by ARRA appropriations in excess of $2,000 pay their laborers and mechanics not less than the prevailing wage rates and fringe benefits, as determined by the Secretary of Labor, for corresponding classes of laborers and mechanics employed on similar projects in the area.

In the case of a variance between (1) schedules of prevailing wage rates and supplements determined under Section 220 of the New York State Labor Law, and (2) the schedule of rates of wages determined pursuant to the Davis-Bacon Act, the Contractor shall accept and use the schedule or schedules that establish the higher rate of wages as a minimum for workmen that are employed on the project.

In the event that the contractor shall fail to pay the prevailing wages and supplements in accordance with the above and as described in this contract, it shall be considered a material breach of contract. For the breach or violation of this provision, without limiting any other rights, remedies or recovery to which the Owner or any individual may be entitled or any civil or criminal penalty for which any violator may be liable, the Owner shall have the rights, in its decision to terminate this agreement immediately upon notice. In such event, the contractor shall be liable to the Owner for any additional costs or expenses incurred by the Owner in completion of the project, and for any other recovery, costs and expenses to which the Owner may be entitled.

Additionally, Section 1605 ("Buy American Requirements") of ARRA requires all iron, steel, and manufactured goods purchased for and incorporated into projects wholly or partially funded by ARRA to have been made in the United States. Exempt from this requirement are materials used during construction but not permanently incorporated into the project.

APPENDICES TO
INFORMATION FOR BIDDERS

Appendix A

Onondaga County MBE/WBE Forms

Appendix B

Sample Worker's Compensation Forms

Appendix C

New York State Department of Labor
Contract Requirements and Wage Rate Schedule
(Complete)

Appendix D

Standard Clauses for all New York State Contracts

Appendix E

Standard Clauses for all New York State Department of Environmental Conservation Contracts

Appendix F

Project Labor Agreement (PLA)

APPENDICES TO
INFORMATION FOR BIDDERS

Appendix G

Federal Requirement Provisions for the Appropriations Acts Grants, USEPA

Appendix H

Federal Requirement Provisions for the ARRA Fund Recipients and
Davis-Bacon (Federal) Prevailing Wage Rates

APPENDIX A

FORM A
CONSULTANT/CONTRACTOR DETAILED MBE/WBE AND EEO UTILIZATION PLAN
(DUE WITHIN 7 DAYS OF THE DATE OF THE LETTER OF INTENT)

Consultant/Contractor Name: Contract Type/Number: Address: City:	Contract Award Date: State: Zip Code:
Project Owner Name:	Project No.:
Address: City:	State: Zip Code:
Authorized Representative:	Title:
Authorized Signature:	
Contract Description:	

PROJECTED M/WBE AND EEO CONTRACT SUMMARY

	%	Amount		%	No. Employees	Work Hours
1. Total Dollar Value of the Prime Contract			5. Total No. Employees/Work Hours			
2. MBE Goal Applied to the Contract			6. Total Goal for Minority Employees			
3. WBE Goal Applied to the Contract			7. Total Goal for Female Employees			
4. MBE/WBE Combined Totals			8. EEO Combined Totals			

EFC ADMINISTRATIVE SERVICES UNIT'S M/WBE PROGRAMS USE ONLY

Proposed Goals		Date Approved	Date Disapproved	Initials
MBE (%)	EEO-Minorities (%)			
WBE (%)	EEO-Minorities (%)			

FORM A CONTINUED

SECTION I - MBE INFORMATION:

In order to achieve the MBE Goals, New York State certified MINORITY-OWNED firms are expected to participate in the following manner.

MBE Firm	Description of Work (MBE)	Project MBE Contract Amount and Award Date	Contract Schedule Start Date	Contract Payment Schedule	Project Completion Date
Name: Address: City: State/Zip Code: Telephone No.:		$_____ Date: _____			
Name: Address: City: State/Zip Code: Telephone No.:		$_____ Date: _____			
Name: Address: City: State/Zip Code: Telephone No.:		$_____ Date: _____			

FORM A CONTINUED

SECTION II - WBE INFORMATION:

In order to achieve the WBE Goals, New York State certified WOMEN-OWNED firms are expected to participate in the following manner.

WBE Firm	Description of Work (WBE)	Project WBE Contract Amount and Award Date	Contract Schedule Start Date	Contract Payment Schedule	Project Completion Date
Name: Address: City: State/Zip Code: Telephone No.:		$_____ Date: _____			
Name: Address: City: State/Zip Code: Telephone No.:		$_____ Date: _____			
Name: Address: City: State/Zip Code: Telephone No.:		$_____ Date: _____			

FORM A CONTINUED

SECTION III - EEO INFORMATION:

In order to achieve the EEO Goals, Minorities and Females are expected to be employed in the following job categories for the specified amount of work hours.

		All Employees		Minority Employees			
Job Categories	Total Work Hours of Contract	Males	Females	Black	Asian	Native American	Hispanic
Officials/ Managers							
Professionals							
Technicians							
Sales Workers							
Office/Clerical							
Craftsmen							
Laborers							
Service/ Workers							
TOTALS							

FORM B

CONTRACTOR'S MINORITY & WOMEN WORKFORCE UTILIZATION PLAN

(DUE WITHIN 7 DAYS OF THE DATE OF THE LETTER OF INTENT)

Company Name: _____

Address: _____

Project Name: _____ Contract #: _____

Duration of Project: From: _____ to: _____

Minority Workforce Goal: 10% Women Workforce Goal: 5%

CONTRACTOR'S WORKFORCE ON PROJECT:

Positions	# Employees
Superintendents	
Foremen	
Journeymen	
Apprentices	
Laborers	
Other Positions (specify)	
Total Workforce	

Minorities Utilized in Workforce		Women Utilized in Workforce	
Positions	# Employees	Positions	# Employees
1			
2			
3			
4			

Minority Percentage _____ Women Percentage _____

This form to be submitted to Onondaga County, Human Rights Commission, prior to Contract Award.
Submit with Form B1 attached.

FORM B1
MINORITY AND WOMEN WORKFORCE UTILIZATION PLAN
DETAILED WORKFORCE LISTING

Company Name: _____ Contract: _____

Street: _____ Date Filed: _____

City/State: _____

Employee Name Street City Telephone	Payroll No.	Social Security Number	Position	Hourly Rate	Starting Date	Date Work Ends	Minority/ Female	Position Filled/ Unfilled

FORM C

CONTRACTOR BID SOLICITATION LETTER
(SHOULD BE SENT A MINIMUM OF 20 BUSINESS DAYS PRIOR TO BID DATE)

Dear MBE/WBE: Re:

We plan to submit a bid for OCDWEP LIPO Contract # _____ which involves (_____) for the (_____ _____) in the (_____), New York. We are currently soliciting bid quotations or proposals from qualified MBE/WBE firms for any portions of the work contained in this contract. Specialty items contained in this Contract that may be subcontracted to M/WBE firms include the following:

ITEM	DESCRIPTION	QUALITY	PROJECTED START DATE

Workplans and specifications are currently available at our office for your review. If you are interested in participation on this project, please complete and submit a copy of the MBE/WBE Contractor Participation Bid/Proposal Form E (Attachment 8 – NYSDEC Handbook of Procedures – OAA/WBE #26) by no later than five (5) business days in advance of the receipt of bids.

If you need additional information and assistance, or need to review the workplans and specifications, please contact ( ) of our office at ( ).

In the event that you cannot bid on this contract, please complete the attached Minority/Women Contractor Unavailability Certification Form F (Attachment 9 NYSDEC Handbook of Procedures – OAA/MBE #27) and return within five (5) days in advance of the receipt of bids.

Thank you for your interest as we look forward to a successful project.

Sincerely,

Attachment

FORM D

MINORITY/WOMEN CONTRACTOR PARTICIPATION LETTER OF INTENT
DUE WITHIN 7 DAYS OF THE DATE OF THE LETTER OF INTENT

Grantee: _____

Address: _____

_____

Dear Grantee:

I. I, _____, intend to perform work for _____, located at _____, in connection with the above project.

Minority/Women Business Enterprise (MBE/WBE) status as ___MBE ( ) AND/OR WBE ( ).

Is certified as of _____.

II. _____ is prepared to perform the following:

Describe work to be performed on the above project	Unit Price	Total Amount

You have projected _____ (commencement date) for such work to start.

_____ will sign a formal contact for the above work conditioned upon the approval of your executed contract with a grantee.

_____ MBE or WBE (circle one)

_____ Consultant or Contractor (circle one)

_____ Address

_____ Address

_____ Telephone Number

_____ Telephone Number

Signature of MBE/WBE

_____ Name

_____ Title Date

Signatures of Prime Contractor/Consultant

_____ Name

_____ Title Date

FORM E

MBE/WBE CONTRACTOR BID PROPOSAL
SHOULD BE RETURNED TO THE PRIME A MINIMUM OF 5 DAYS IN ADVANCE OF THE BID

To: _____
NAME OF PRIME BIDDER/CONTRACTOR

_____ Proposes to perform work as follows:
NAME OF FIRM

(Specify in detail the particular work items or parts to be performed thereof and associated dollar amounts):

TYPE OF WORK	UNIT PRICE	QUANTITY	DOLLAR AMOUNT

_____
NAME OF MBE/WBE CONTRACTOR

BY: _____ _____
SIGNATURE OF MBE/WBE CONTRACTOR DATE

FORM F

MINORITY/WOMEN CONTRACTOR UNAVAILABILITY CERTIFICATION
DUE WITHIN 7 DAYS OF THE DATE OF THE LETTER OF INTENT

1. CONSULTANT/CONTRACTOR COMPLETES: Re: _____

I, _____
(principal of prime consultant/contractor) (title)
of _____ _____
(name of consultant's/contractor's firm) (address)
_____, _____
(telephone number)

CERTIFY THAT ON _____ CONTACTED THE FOLLOWING MINORITY/WOMEN BUSINESS ENTERPRISE CONTRACTOR(S) BY REGISTERED MAIL, TO OBTAIN BIDS FOR WORK ITEMS TO BE PERFORMED ON THE _____
PROJECT CONTRACT # _____ AREA OF WORK MBE/WBE ASKED TO BID FOR:

(Attach the names of MBE/WBE's, Type of Work and Bid Price)

_____

_____

_____

_____

_____

TO THE BEST OF MY KNOWLEDGE AND BELIEF, SAID MINORITY/WOMEN BUSINESS ENTERPRISE CONTRACTOR(S) WAS UNAVAILABLE FOR WORK ON THIS PROJECT, OR UNABLE TO PREPARE A BID, FOR THE FOLLOWING REASONS: PLEASE PLACE A LETTER CODE CORRESPONDING TO THE CODE GIVEN TO EACH MBE/WBE FIRM CONTACTED ABOVE.

_____ Did not have the capability of performing the work sought

_____ Contract too small

_____ Location too remote

_____ Received solicitation notice too late

_____ Did not want to work for this contractor

_____ Other (give reason)

_____
SIGNATURE OF PRIME CONSULTANT/CONTRACTOR

_____
TITLE DATE

FORM G
(DUE WITH EACH MONTHLY PAYMENT REQUEST)

Project Name _____

County FAMIS Project #	
SRF Project #	
Bond Act Contract #	
EPA Grant #	

MONTHLY REPORT
County of Onondaga
Month of _____ Year _____

ENGINEER/CONTRACTOR'S **MINORITY AND WOMENS BUSINESS (M/WBE) MONTHLY REPORT**

The following information indicates the payment amounts made to the contractor by the County of Onondaga and payments made to NYS certified M/WBEs from the contractor on this project. The payments as shown made to them are in compliance with contract documents for the above referenced project:

ENGINEER/CONTRACTOR _____ CONTRACT NO. _____

ORIG. CONTRACT AMOUNT _____ AMOUNT PAID TO ENGINEER/CONTRACTOR THIS MONTH _____

MBE Goal / Amount ___ % = _____ WBE Goal / Amount ___ % = _____

Subcontractor/Description of Services	Work Status This Report	Total Subcontractor Contract Amount		Payments This Month		Previous Payments		Total Payments Made to Date	
		MBE	WBE	MBE	WBE	MBE	WBE	MBE	WBE
	___ Active ___ Inactive ___ Complete								
	___ Active ___ Inactive ___ Complete								
	___ Active ___ Inactive ___ Complete								
	___ Active ___ Inactive ___ Complete								
	___ Active ___ Inactive ___ Complete								
TOTAL									
% of TOTAL CONTRACT									

_____ _____
Date **Signature**

FORM H
EMPLOYMENT INFORMATION REPORT HRC-1
(DUE WITHIN 7 DAYS OF THE DATE OF THE LETTER OF INTENT)

EQUAL EMPLOYMENT OPPORTUNITY

Human Rights Commission of
Syracuse and Onondaga County
John H. Mulroy Civic Center
421 Montgomery Street, 11th Floor
Syracuse, New York 13202
315-435-3567

SECTION A - COMPANY IDENTIFICATION

(To be answered by all respondents)

1 Report unit for which this report is filed. (If a combined report covering two or more units, please so indicate and identify the area covered by this report)

A	NAME OF REPORTING UNIT			TELEPHONE
	ADDRESS (NUMBER & STREET)	CITY	STATE	ZIP CODE

SECTION B - REPORTING UNIT INFORMATION

1 Number of Employees at Reporting Unit:

JOB CATEGORIES	ALL EMPLOYEES			MINORITY GROUP EMPLOYEES									
				MALE					FEMALE				
	TOTAL COLS 2,3	Male	Female	AFRICAN AMERICAN	LATINO	NATIVE AMERICAN	ASIAN OR PACIFIC ISLANDER	MULTI RACIAL	AFRICAN AMERICAN	LATINO	NATIVE AMERICAN	ASIAN OR PACIFIC ISLANDER	MULTI RACIAL
	(1)	(2)	(3)	(4)	(5)	(6)	(7)	(8)	(9)	(10)	(11)	(12)	(13)
Officials & Mgrs													
Professionals													
Technicians													
Sales Workers													
Office & Clerical													
Craftsman Skilled													
Operatives Semi-Skilled													
Laborer Un-skilled													
Service Worker													
TOTALS													
TOTAL EMPS from previous report (If any)													

SECTION C - REMARKS

Use this item to give any identification data appearing on last report which differs from that given above, explain major changes in employment, changes in composition of reporting units and other pertinent information.

SECTION D - SIGNATURE AND IDENTIFICATION

(To be answered by all respondents)

NAME (SIGNATURE)	ADDRESS (NUMBER AND STREET)		DATE OF REPORT
NAME (TYPE or PRINT)	CITY		TELEPHONE AREA CODE EXT. NUMBER
TITLE	STATE	ZIP CODE	

WILLFULLY FALSE STATEMENTS ON THIS REPORT ARE PUNISHABLE BY LAW

INSTRUCTIONS FOR FILING MONTHLY EMPLOYMENT UTILIZATION REPORT - FORM I

The Monthly Employment Utilization Report is to be completed by each subject contractor (both Prime and Sub) and signed by a responsible official of the company. The reports are to be filed by the 5th day of each month during the term of the contract, and they shall include the total work-hours for each employee classification in each trade in the covered area for the monthly reporting period. The prime contractor is responsible for submitting its subcontractors report, along with its own.

Minority	Includes Black, Hispanics, American Indians, Alaskan Natives and Asian and Pacific Islanders, both men and women.
1. Current Goals	As stated Bid Conditions.
2. Reporting Period	From the first to the end of the month. Due on the 5th day of the following month.
3. Estimated Completion Date	Best possible estimation.
4. Percent of job completed	% project work contractor of sub-contractor has completed.
5. Work-Hours of Employment	a. The total number of male hours and the total (a-e) number of female hours worked by employees in each classification. b.-e. The total number of male hours and and the total number of female hours worked by each specified group of minority employees in each classification.
6. Minority Percentage	The percentage of total minority work-hours of all work-hours (the sum of columns 5b, 5c, 5d, and 5e divided by column 5a; just one figure for each construction trade).
7. Female Percentage	For each trade the number reported in 5a. (F) divided by the sum of the numbers reported in 5a. M and F.
8. Total Number of Employees.	Total number of male and total number of female employees working in each classification of each trade in the contractor's aggregate workforce during reporting period.
9. Total Number of Minority Employees	Total number of male minority employees and total number of female minority employees working in each classification in each trade in the contractor's aggregate workforce during reporting period.
10. Construction Trade	Only those construction crafts which contractor employs in the covered area.
11. and 12.	These items must be completed.

FORM I

MONTHLY EMPLOYMENT UTILIZATION REPORT

(See Reverse Side for Instructions)

(DUE WITH EACH MONTHLY PAYMENT REQUEST)

Project:	1. Current Goals: Minority ____ Female ____	2. Reporting Period Mo. ____ Yr.____	3. Start Date: _____ Est. Completion Date: _____
Return To:	Name & Location of Contractor:		4. Percent of Job Completed

5. Work Hours of Employment	Employees																
	5a. All Employees		5b. Black		5c. Hispanic		5d. Asian or Pacific Islander		5e. American Indian/ Alaskan Native		6. Minority	7. Female	8. Total		9. Minority		10. Construction
Classification	M	F	M	F	M	F	M	F	M	F	Percentage	Percentage	M	F	M	F	Trades
Supervisory																	
Journey Worker																	
Apprentice																	
Trainee																	
Sub Total																	
Journey Worker																	
Apprentice																	
Trainee																	
Sub Total																	
Journey Worker																	
Apprentice																	
Trainee																	
Sub Total																	
TOTAL SUPERVISORS																	
TOTAL JOURNEY WORKERS																	
TOTAL APPRENTICES																	
TOTAL TRAINEES																	
GRAND TOTAL																	

11. Company Officials' Signature & Title:	12. Telephone Number (Include Area Code)	Date Signed

OMB Control No: 2090-0030
Approved: 05/01/2008
Approval Expires: 01/31/2011

Environmental
Protection Agency

Disadvantaged Business Enterprise Program
DBE Subcontractor Participation Form

The public reporting and recordkeeping burden for this collection of information is estimated to average fifteen (15) minutes. Burden means the total time, effort, or financial resources expended by persons to generate, maintain, retain, or disclose or provide information to or for a Federal agency. This includes the time needed to review instructions; develop, acquire, install, and utilize technology and systems for the purposes of collecting, validating, and verifying information, processing and maintaining information, and disclosing and providing information; adjust the existing ways to comply with any previously applicable instructions and requirements; train personnel to be able to respond to a collection of information; search data sources; complete and review the collection of information; and transmit or otherwise disclose the information. An agency may not conduct or sponsor, and a person is not required to respond to, a collection of information unless it displays a currently valid OMB control number.

Send comments on the Agency's need for this information, the accuracy of the provided burden estimates, and any suggested methods for minimizing respondent burden, including the use of automated collection techniques to the Director, Collection Strategies Division, U.S. Environmental Protection Agency (2822), 1200 Pennsylvania Ave., NW, Washington, D.C. 20460. Include the OMB control number in any correspondence. Do not send the completed EPA DBE Subcontractor Participation Form to this address.

OMB Control No: 2090-0030
Approved: 05/01/2008
Approval Expires: 01/31/2011

Environmental Protection Agency

Disadvantaged Business Enterprise Program
DBE Subcontractor Participation Form

NAME OF SUBCONTRACTOR[1]	PROJECT NAME
ADDRESS	CONTRACT NO.
TELEPHONE NO.	EMAIL ADDRESS
PRIME CONTRACTOR NAME	

Please use the space below to report any concerns regarding the above EPA-funded project (e.g., reason for termination by prime contractor, late payment, etc.).

CONTRACT ITEM NO.	ITEM OF WORK OR DESCRIPTION OF SERVICES RECEIVED FROM THE PRIME CONTRACTOR	AMOUNT SUBCONTRACTOR WAS PAID BY PRIME CONTRACTOR

Subcontractor Signature _____ Title/Date _____

[1]Subcontractor is defined as a company, firm, joint venture, or individual who enters into an agreement with a contractor to provide services pursuant to an EPA award of financial assistance.

OMB Control No: 2090-0030
Approved: 05/01/2008
Approval Expires: 01/31/2011

Environmental
Protection Agency

Disadvantaged Business Enterprise Program
DBE Subcontractor Performance Form

The public reporting and recordkeeping burden for this collection of information is estimated to average fifteen (15) minutes. Burden means the total time, effort, or financial resources expended by persons to generate, maintain, retain, or disclose or provide information to or for a Federal agency. This includes the time needed to review instructions; develop, acquire, install, and utilize technology and systems for the purposes of collecting, validating, and verifying information, processing and maintaining information, and disclosing and providing information; adjust the existing ways to comply with any previously applicable instructions and requirements; train personnel to be able to respond to a collection of information; search data sources; complete and review the collection of information; and transmit or otherwise disclose the information. An agency may not conduct or sponsor, and a person is not required to respond to, a collection of information unless it displays a currently valid OMB control number.

Send comments on the Agency's need for this information, the accuracy of the provided burden estimates, and any suggested methods for minimizing respondent burden, including the use of automated collection techniques to the Director, Collection Strategies Division, U.S. Environmental Protection Agency (2822), 1200 Pennsylvania Ave., NW, Washington, D.C. 20460. Include the OMB control number in any correspondence. Do not send the completed EPA DBE Subcontractor Performance Form to this address.

OMB Control No: 2090-0030
Approved: 05/01/2008
Approval Expires: 01/31/2011

Environmental
Protection Agency

Disadvantaged Business Enterprise Program
DBE Subcontractor Performance Form

NAME OF SUBCONTRACTOR[1]	PROJECT NAME
ADDRESS	BID/PROPOSAL NO.
TELEPHONE NO.	E-MAIL ADDRESS
PRIME CONTRACTOR NAME	

CONTRACT ITEM NO.	ITEM OF WORK OR DESCRIPTION OF SERVICES BID TO PRIME	PRICE OF WORK SUBMITTED TO PRIME CONTRACTOR

Currently certified as an MBE or WBE under EPA's DBE Program? _____ Yes _____ No Signature of Prime Contractor Date Print Name Title _____

_____ Signature of Subcontractor Date

_____ Print Name Title

[1]Subcontractor is defined as a company, firm, joint venture, or individual who enters into an agreement with a contractor to provide services pursuant to an EPA award of financial assistance.

OMB Control No: 2090-0030
Approved: 05/01/2008
Approval Expires: 01/31/2011

Environmental
Protection Agency

Disadvantaged Business Enterprise Program
DBE Subcontractor Utilization Form

The public reporting and recordkeeping burden for this collection of information is estimated to average fifteen (15) minutes. Burden means the total time, effort, or financial resources expended by persons to generate, maintain, retain, or disclose or provide information to or for a Federal agency. This includes the time needed to review instructions; develop, acquire, install, and utilize technology and systems for the purposes of collecting, validating, and verifying information, processing and maintaining information, and disclosing and providing information; adjust the existing ways to comply with any previously applicable instructions and requirements; train personnel to be able to respond to a collection of information; search data sources; complete and review the collection of information; and transmit or otherwise disclose the information. An agency may not conduct or sponsor, and a person is not required to respond to, a collection of information unless it displays a currently valid OMB control number.

Send comments on the Agency's need for this information, the accuracy of the provided burden estimates, and any suggested methods for minimizing respondent burden, including the use of automated collection techniques to the Director, Collection Strategies Division, U.S. Environmental Protection Agency (2822), 1200 Pennsylvania Ave., NW, Washington, D.C. 20460. Include the OMB control number in any correspondence. Do not send the completed EPA DBE Subcontractor Utilization Form to this address.

OMB Control No: 2090-0030
Approved: 05/01/2008
Approval Expires: 01/31/2011

Environmental Protection Agency

Disadvantaged Business Enterprise Program
DBE Subcontractor Utilization Form

BID/PROPOSAL NO.	PROJECT NAME
NAME OF PRIME BIDDER/PROPOSER	E-MAIL ADDRESS
ADDRESS	
TELEPHONE NO.	FAX NO.

The following subcontractors[1] will be used on this project:

COMPANY NAME, ADDRESS, PHONE NUMBER, AND E-MAIL ADDRESS	TYPE OF WORK TO BE PERFORMED	ESTIMATED DOLLAR AMOUNT	CURRENTLY CERTIFIED AS AN MBE OR WBE?

I certify under penalty of perjury that the forgoing statements are true and correct. In the event of a replacement of a subcontractor, I will adhere to the replacement requirements set forth in 40 CFR Part 33 Section 33.302(c).

Signature of Prime Contractor _____ Date _____

Print Name _____ Title _____

[1]Subcontractor is defined as a company, firm, joint venture, or individual who enters into an agreement with a contractor to provide services pursuant to an EPA award of financial assistance.

APPENDIX B

[illegible] WC/DB100/101 100 Broadway Menands ALBANY 12241 (866) 750-5157 Fax# (518) 473-9186	[illegible] WC/DB100/101 State Office Building 44 Hawley Street BINGHAMTON 13901 (866) 802-3604 Fax# (607) 721-8324	[illegible] WC/DB100/101 111 Livingston St. 22nd Floor BROOKLYN 11201 (800) 877-1373 Fax# (718) 802-6842	[illegible] 107 Delaware Ave. BUFFALO 14202 (866) 231-0645 Fax# (716) 842-2132	WC/DB100/101 220 Rabro Drive Suite 100 HAUPPAUGE 11788 (866) 681-5354 Fax# (631) 952-7906	NYS WCB WC/DB100/101 175 Fulton Ave. HEMPSTEAD 11550 (866) 805-3630 Fax# (516) 560-7807	WC/DB100/101 215 W. 125th St. 3rd Floor NEW YORK 10027 (800) 877-1373 Fax# (212) 316-9183	WC/DB100/101 41 North Division St. PEEKSKILL 10566 (866) 746-0652 Fax# (914) 788-5793	158-46 31st Ave. 3rd Floor QUEENS 11432 (800) 877-1373 Fax# (718) 291-7248	NYS WCB WC/DB100/101 130 Main St. ROCHESTER 14614 (866) 211-0544 Fax# (585) 238-8351	NYS WCB WC/DB100/101 935 James St. SYRACUSE 13203 (866) 802-3720 Fax# (315) 473-2938

Affidavit For New York Entities And Any Out Of State Entities With No Employees, That New York State Workers' Compensation And/Or Disability Benefits Insurance Coverage Is Not Required

(Incomplete forms will be returned – Please contact an attorney if you have any questions regarding this form.)

*****This form cannot be used to waive the workers' compensation rights or obligations of any party including a subcontractor*****

The applicant may use this Affidavit **ONLY** to show a government entity that New York State specific worker compensation and/or disability benefits insurance is not required. The applicant may **NOT** use this form to show either oth businesses or those business' insurance carriers that such insurance is not required.

Applicant must either fax or mail this completed form to the closest New York State Workers' Compensation Board office at th fax number or address listed on the top of this form. Incomplete forms will be returned.

Please note: This statement *must be notarized* and also have been *stamped* by the New York State Workers' Compensation Board. This affidav will not be accepted by government officials one year from the date received by the Workers' Compensation Board.

Upon receipt of a fully completed WC/DB 100 form, the Workers' Compensation Board will stamp this form as received and return it to you by eith mail or fax. Please provide a copy (or the original, if required by the government entity) of this stamped form to the government entity from which ye are requesting a permit, license or contract.

_____

In the Application of (Business Name and Address)

_____

_____

_____

for a _____ permit/license/contract

State of _____)
) ss.:
County of _____)

_____ *(applicant's name)* being duly sworn, deposes and says:

1. I am the _____ *(position)* with _____ *(business or trade name)*, _____ *(type of business)*. The telephone number of the business is (____)_____. The Feder Employer Identification Number of the business (or the Social Security Number of the business owner) is _____ The New York State Unemployment Insurance Employer Registration Number (if any) of the business is _____. I affir that due to my position with the above-named business I have the knowledge, information and authority to make this affidavit.
2. My personal address is _____ and my home telephone number (____)_____.
3. That the above named business is applying for a _____ *(type of permit/ license/contra applying for)* from _____ *(governmental entity issuing the permit/ license/contract).*

3a) (Optional – Location of where work will be performed in New York Sta _____ from _____ to _____ *(dates necessa to complete work associated with permit/license/contract).* The estimated dollar amount of project is _____.)

4. That the above named business is certifying that it is exempt from obtaining New York State specific workers' compensatic insurance coverage for the following reason (to be eligible for exemption, applicant must be able to truthfully check ONE of the boxe from 4a. through 4h.):

☐ 4a.) the business is owned by one individual and is not a corporation. Other than the owner, there are no employees, leased employees, borrowed employees, part-time employees, subcontractors or unpaid volunteers (including family members).

☐ 4b.) the business is a partnership under the laws of New York State and is not a corporation. Other than the partners, there are n employees, leased employees, borrowed employees, part-time employees, subcontractors or unpaid volunteers (including famil members). *(Must attach separate sheet with a list of all the partners names and also with the signatures of all the partners.)*

☐ 4c.) the business is a one person owned corporation, with that individual owning all of the stock and holding all offices of th corporation Other than the corporate owner, there are no employees, leased employees, borrowed employees, part-time employee subcontractors or unpaid volunteers (including family members).

☐ 4d.) the business is a two person owned corporation, with those individuals owning all of the stock and holding all offices of the corporation (each individual must own at least one share of stock). Other than the corporate owners, there are no employees, leased employees, borrowed employees, part-time employees, subcontractors or unpaid volunteers (including family members). *(Must attach separate sheet with a list of the names of both owners, and also with both owners' signatures.)*

☐ 4e.) the applicant is a nonprofit entity (under IRS rules). With the exception of clergy or teachers, the nonprofit has no compensated individuals or subcontractors providing any services.

☐ 4f.) the business is a farm with less than $1,200 in payroll the preceding calendar year.

☐ 4g.) the applicant is a homeowner serving as the general contractor for his/her primary/secondary personal residence. <u>On</u> uncompensated friends/family are helping to build this structure.

☐ 4h.) other than the business owner(s) and individuals obtained from a registered temporary service agency, there are no employees leased employees, borrowed employees, part-time employees, subcontractors or unpaid volunteers (including family members). Other than the business owner(s), all individuals providing services to the business are obtained from a registered temporary service agency and that agency has covered these individuals for New York State workers' compensation insurance. In addition, the business is owned by one individual or is a partnership under the laws of New York State and is not a corporation; or is a one or two person owned corporation, with those individuals owning all of the stock and holding all offices of the corporation

5. That the above named business is certifying that it is exempt from obtaining New York State disability benefits insurance coverage for the following reason (to be eligible for exemption, applicant must be able to truthfully check ONE of the boxes from 5a. through 5f.):

☐ 5a.) the business is owned by one individual or is a partnership under the laws of New York State and is not a corporation; or is a one or two person owned corporation, with those individuals owning all of the stock and holding all offices of the corporation. In addition the business does not require disability benefits coverage at this time since it has not employed one or more individuals on at least 2 days in any calendar year in New York State. *(Independent contractors are not considered to be employees under the Disability Benefits Law.)*

☐ 5b.) the applicant is a political subdivision that is legally exempt from providing statutory disability benefits coverage.

☐ 5c.) the applicant is a nonprofit religious, charitable or educational institution. With the exception of executive officers, clergy, sextons, teachers or professionals, the nonprofit has no compensated individuals providing services.

☐ 5d.) the business is a farm and all employees are farm laborers.

☐ 5e.) the applicant is a homeowner serving as the general contractor for his/her primary/secondary personal residence. <u>On</u> uncompensated friends/family are helping to build this structure.

☐ 5f.) other than the business owner(s) and individuals obtained from the temporary service agency, there are no other employees. Other than the business owner(s), all individuals providing services to the business are obtained from a registered temporary service agency and that agency has covered these individuals for New York State disability benefits insurance. In addition, the business is owned by one individual or is a partnership under the laws of New York State and is not a corporation; or is a one or two person owned corporation, with those individuals owning all of the stock and holding all offices of the corporation.

6. That if circumstances change so that workers' compensation insurance and/or disability benefits coverage is required, such as the hiring of employees, the above-named business will immediately acquire appropriate New York State specific workers' compensation insurance and/or disability benefits coverage and also immediately furnish proof of that coverage on forms approved by the Chair of the Workers' Compensation Board to the government entity listed in item 3 on the front of this form.

7. That based on the facts presented, I certify that the above-named business does not require (check box 7a. and/or 7b.):

☐ 7a.) workers' compensation insurance. (applicant must have checked ONE of the boxes from 4a. through 4h.)

☐ 7b.) disability benefits insurance. (applicant must have checked ONE of the boxes from 5a. through 5f.)

8. By signing my name below, I hereby affirm that the statements made herein are true, that I have not made any materially false statements and I make this affidavit under the penalties of perjury. I further affirm that I understand that any false statement, representation or concealment will subject me to felony criminal prosecution, including jail and civil liability in accordance with the Workers' Compensation Law and all other New York State laws.

_____
(Applicant's Signature – first and last name)

Sworn to before me this _____
Day of _____, 20__

_____
Notary Public

NYS Workers' Compensation Board Received Stamp

Because this is a sworn affidavit, employees of the Workers' Compensation Board cannot assist applicants in answering questions about this form.

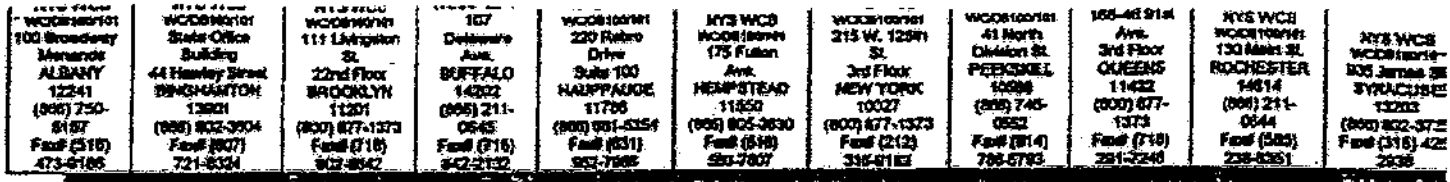

(Incomplete forms will be returned – Please contact an attorney if you have any questions regarding this form.)

This form cannot be used to waive the workers' compensation rights or obligations of any party including a subcontractor*

The applicant may use this Affidavit ONLY to show a government entity that New York State specific workers' compensation and/or disability benefits insurance is not required. The applicant may NOT use this form to show either other businesses or those business' insurance carriers that such insurance is not required.

Applicant must either fax or mail this completed form to the closest New York State Workers' Compensation Board office at the fax number or address listed on the top of this form. Incomplete forms will be returned.

Please note: This statement *must be notarized* and also have been *stamped* by the New York State Workers' Compensation Board. This affidavit will not be accepted by government officials one year from the date received by the Workers' Compensation Board.

Upon receipt of a fully completed WC/DB-101 form, the Workers' Compensation Board will stamp this form as received and return it to you by either mail or fax. Please provide a copy (or the original, if required by the government entity) of this stamped form to the government entity from which you are requesting a permit, license or contract.

In the Application of (Business Name and Address)

_____

_____

_____

for a _____ permit/license/contract

State of _____)
) ss.:
County of _____)

_____ *(applicant's name)* being duly sworn, deposes and says:

1. I am the _____ *(position)* with _____ *(business or trade name)*, a _____ *(type of business)*. The telephone number of the business is (____) _____. The Federal Employer Identification Number of the business (or the Social Security Number of the business owner) is _____. The New York State Unemployment Insurance Employer Registration Number (if any) of the business is _____. I affirm that due to my position with the above-named business I have the knowledge, information and authority to make this affidavit.

2. My personal address is _____ and my home telephone number is (____) _____.

3. That the above named business is applying for a _____ *(type of permit/ license/contract applying for)* from _____ *(governmental entity issuing the permit/ license/contract)*.
3a) (Optional – Location of where work will be performed in New York State _____ from _____ to _____ *(dates necessary to complete work associated with permit/license/contract)*. The estimated dollar amount of project is _____.)

4. That the above named business is certifying that it is exempt from obtaining New York State specific workers' compensation insurance coverage for the following reason (to be eligible for exemption, applicant must be able to truthfully check either box 4a or 4b

☐ 4a) the business is from outside of New York State, and wishes to use its foreign or other state's workers' compensation insurance policy to cover its employees while they are working in New York State. *To check this box, the applicant MUST have New York (NY) specifically listed on Item 3C on the Information Page of its workers' compensation insurance policy (Exception-3C coverage not required for contracts where ALL work is done outside of New York State), and MUST attach a certificate of insurance from a foreign or other State's workers' compensation insurance policy to this Affidavit (and listed the governmental entity issuing the permit/ license/contract as the Certificate Holder). Further, by checking box "4a" on this form, the applicant CERTIFIES that for the period covered by this exemption form the above business DOES NOT or WILL NOT meet any of the following four criteria (4aa. – 4ad.).*

4aa. has a physical location within New York State, nor

4ab. has more than $50,000 in labor costs in a calendar year for employees and subcontractors working in New York State, nor

4ac. has one or more employees (including subcontractors) with a primary work location or hired within New York State, nor

4ad. has an employee or employees (including subcontractors) working in New York State more than 90 days in a calendar year.

Applicants that meet any of the above four criteria (4aa. – 4ad.), CANNOT check "box 4a" on this form and CANNOT file this form for a workers' compensation exemption. *PLEASE NOTE: Applicants that meet any of the above four criteria (4aa. – 4ad.), are REQUIRED to have a full New York State workers' compensation policy (NY listed under Item 3A on the Information Page of the insurance policy) and must file either a C-105.2 – Certificate of Workers' Compensation Insurance OR a U-26.3, the State Insurance Fund's version of this form (the business' insurance carrier will send these forms to the government entity issuing the permit, license or contract upon the business' request) as proof of this coverage. [Applicants that DO NOT meet any of the above four criteria (4aa. – 4ad.) are NOT required to have NY listed under Item 3A on the Information Page of the insurance policy. Instead, the out-of-state employer's employees will be covered when working in New York by having NY listed in Item 3C on the Information Page of the workers' compensation insurance policy (the other-states section).]*

☐ 4b) All employees from the entity applying for the permit, license or contract are direct employees of a government entity outside of New York State and such employees are outside the jurisdiction of New York State workers' compensation coverage. *(Applicant MUST attach a certificate of insurance from its foreign or other State's workers' compensation insurance policy to this Affidavit)*

5. That the above named business is certifying that it is exempt from obtaining New York State disability benefits insurance coverage for the following reason (to be eligible for exemption, applicant must be able to truthfully check ONE of the boxes from 5a. through 5b.):

☐ 5a.) the business does not require disability benefits coverage at this time since it has not employed one or more individuals on at least 30 days in any calendar year in New York State. *(Independent contractors are not considered to be employees under the Disability Benefits Law.)*

☐ 5b.) All employees from the entity applying for the permit, license or contract are direct employees of a government entity outside of New York State and such employees are outside the jurisdiction of New York disability benefits coverage.

6. That if circumstances change so that workers' compensation insurance and/or disability benefits coverage is required, the above named business will immediately acquire appropriate New York State specific workers' compensation insurance and/or disability benefits coverage and also immediately furnish proof of that coverage on forms approved by the Chair of the Workers' Compensation Board to the government entity listed in item 3 on the front of this form.

7. That based on the facts presented, I certify that the above-named business does not require (check box 7a. and/or 7b.):

☐ 7a.) workers' compensation insurance. (applicant must have checked box 4a or 4b and attached a certificate of insurance from its foreign or other State's workers' compensation insurance policy to this Affidavit)

☐ 7b.) disability benefits insurance. (applicant must have checked either box 5a.or 5b.)

8. **By signing my name below, I hereby affirm that the statements made herein are true, that I have not made any materially false statements and I make this affidavit under the penalties of perjury. I further affirm that I understand that any false statement, representation or concealment will subject me to felony criminal prosecution, including jail and civil liability in accordance with the Workers' Compensation Law and all other New York State laws.**

_____
(Applicant's Signature – first and last name)

Sworn to before me this ____
Day of _____, 20__

_____
Notary Public

NYS Workers' Compensation Board Received Stamp

Because this is a sworn affidavit, employees of the Workers' Compensation Board cannot assist applicants in answering questions about this form.

STATE OF NEW YORK
WORKERS' COMPENSATION BOARD

CERTIFICATE OF NYS WORKERS' COMPENSATION INSURANCE COVERAGE

1a. Legal Name and address of Insured (Use street address only) Work Location of Insured *(Only required if coverage is specifically limited to certain locations in New York State, i.e. a Wrap-Up Policy)*	1b. Business Telephone Number of Insured 1c. NYS Unemployment Insurance Employer Registration Number of Insured 1d. Federal Employer Identification Number of Insured or Social Security Number
2. Name and Address of the Entity Requesting Proof of Coverage (Entity Being Listed as the Certificate Holder)	3a. Name of Insurance Carrier 3b. Policy Number of entity listed in box "1a": 3c. Policy effective period: _____ to _____ 3d. The Proprietor, Partners or Executive Officers are: ☐ included. (Only check box if all partners/officers included) ☐ all excluded or certain partners/officers excluded. 3e. Demolition is: *(Definition of Demolition on Reverse)* ☐ included. ☐ excluded.

SAMPLE

This certifies that the insurance carrier indicated above in box "3a" insures the business referenced above in box "1a" for workers' compensation under the New York State Workers' Compensation Law. (To use this form, New York (NY) must be listed under Item 3A on the INFORMATION PAGE of the workers' compensation insurance policy). The Insurance Carrier or its licensed agent will send this Certificate of Insurance to the entity listed above as the certificate holder in box "2".

The Insurance Carrier will also notify the above certificate holder within 10 days IF a policy is canceled due to nonpayment of premiums or within 30 days IF there are reasons other than nonpayment of premiums that cancel the policy or eliminate the insured from the coverage indicated on this Certificate. (These notices may be sent by regular mail.) Otherwise, this Certificate is valid for a maximum of one year after this form is approved by the insurance carrier or its licensed agent.

Please Note: Upon the cancellation of the workers' compensation policy indicated on this form, if the business continues to be named on a permit, license or contract issued by the certificate holder, the business must provide that certificate holder with a new Certificate of Workers' Compensation coverage or other authorized proof that the business is complying with the mandatory coverage requirements of the New York State Workers' Compensation Law.

Under penalty of perjury, I certify that I am an authorized representative or licensed agent of the insurance carrier referenced above and that the named insured has the coverage as depicted on this form.

Approved by: _____
(Print name of authorized representative or licensed agent of insurance carrier)

Approved by: _____
(Signature) (Date)

Title: _____

Telephone Number of authorized representative or licensed agent of insurance carrier: _____

Please Note: Only insurance carriers and their licensed agents are authorized to issue the C-105.2 form. Insurance brokers are NOT authorized to issue it.

C-105.2 (12-03)

Section 57. Restriction on issue of permits and the entering into contracts unless compensation is secured.

1. The head of a state or municipal department, board, commission or office authorized or required by law to issue any permit for or in connection with any work involving the employment of employees in a hazardous employment defined by this chapter, and notwithstanding any general or special statute requiring or authorizing the issue of such permits, shall not issue such permit unless proof duly subscribed by an insurance carrier is produced in a form satisfactory to the chair, that compensation for all employees has been secured as provided by this chapter. Nothing herein, however, shall be construed as creating any liability on the part of such state or municipal department, board, commission or office to pay any compensation to any such employee if so employed.

2. The head of a state or municipal department, board, commission or office authorized or required by law to enter into any contract for or in connection with any work involving the employment of employees in a hazardous employment defined by this chapter, notwithstanding any general or special statute requiring or authorizing any such contract, shall not enter into any such contract unless proof duly subscribed by an insurance carrier is produced in a form satisfactory to the chair, that compensation for all employees has been secured as provided by this chapter.

Definition of Demolition (Box "3e." on the reverse side of this form)

A building wrecking or demolition is one where a building, chimney or steeple is razed, or where a floor, exterior wall or roof is removed. If the contract involves only the removal of interior walls, partitions or the facing only of any exterior wall, it is not considered demolition.

Out-of-State Companies Working in NYS -- NYS Workers' Compensation and Disability Benefits Requirements for Permits, Licenses or Contracts issued by NYS Government Entities

Generally, employers must have a workers' compensation policy or a combination of policies that cover each state in which they employ permanent employees to cover on-the-job accidents and disabilities. As you are probably aware, certain insurance carriers write policies that cover multiple states. "Riders" found in Sections 3A and 3C on the Information Page of the policy specify the states of coverage. In addition, the operations covered in each state are specified in attachments to the policy.

In addition to any other state's workers' compensation coverage, an out-of-state employer needs to be specifically covered for NYS workers' compensation insurance when there are "sufficient contacts" between that employer and the state. While there is no single determinative factor, any of the following criteria could be the basis for finding "sufficient contacts" requiring New York coverage:

- a physical location within New York State;
- $50,000 in payroll during a calendar year in New York State;
- one or more employees (including subcontractors) with a primary work location or hired within New York State; or
- employees (including subcontractors) working in New York State for more than 90 days during a calendar year.

If an out-of-state employer meets any of the above criteria, it is required to carry a New York State workers' compensation policy. When New York is listed in Item 3A on the Information Page of an employer's workers' compensation insurance policy, the employer is fully covered under the NYS Workers' Compensation Law. If insured through a private insurance carrier, the out-of-state employer must file a C-105.2 -- Certificate of Workers' Compensation Insurance (the business' insurance carrier will send this form to the government entity upon request) **PLEASE NOTE:** The New York State Insurance Fund provides its own version of this form, the U-26.3. If the out-of-state employer is legally self-insured in New York State, the out-of-state employer must file a SI-12 -- Certificate of Workers' Compensation Self-Insurance (the business calls the Board's Self-Insurance Office at 518-402-0247). If the out-of-state employer is participating in group self-insurance, the out-of-state employer must file a GSI-105.2 -- Certificate of Participation in Worker's Compensation Group Self-Insurance (the business' Group Self-Insurance Administrator will send this form to the government entity upon request).

If an out-of-state employer does not meet any of the above criteria and has New York (NY) listed in Item 3C on the Information Page of its workers' compensation insurance policy (the Other States Insurance section), NYS specific coverage is not required and the employer may be able to use its own state's workers' compensation coverage by filing a WC/DB-101 form. [The out-of-state employer's employees will be covered under NY benefits when working in New York by having NY listed in Item 3C on the Information Page of the workers' compensation insurance policy (the Other States Insurance section).]

SAMPLE

199 CHURCH STREET, NEW YORK, N.Y. 10007-1100
Phone: (212) 587-3976

CERTIFICATE OF WORKERS' COMPENSATION INSURANCE

POLICYHOLDER	CERTIFICATE HOLDER

POLICY NUMBER	CERTIFICATE NUMBER	PERIOD COVERED BY THIS CERTIFICATE	DATE

THIS IS TO CERTIFY THAT THE POLICYHOLDER NAMED ABOVE IS INSURED WITH THE NEW YORK STATE INSURANCE FUND UNDER POLICY NO. 1195 111-8 UNTIL 04/16/200[illegible] COVERING THE ENTIRE OBLIGATION OF THIS POLICYHOLDER FOR WORKERS' COMPENSATION UNDER THE NEW YORK WORKERS' COMPENSATION LAW WITH RESPECT TO ALL OPERATIONS IN THE STATE OF NEW YORK, EXCEPT AS INDICATED BELOW.

IF SAID POLICY IS CANCELLED, OR CHANGED PRIOR TO [illegible] IN SUCH MANNER AS TO AFFECT THIS CERTIFICATE, 10 DAYS WRITTEN NOTICE OF SUCH CANCELLATION WILL BE GIVEN TO THE CERTIFICATE HOLDER ABOVE. NOTICE BY REGULAR MAIL ADDRESSED SHALL BE SUFFICIENT COMPLIANCE WITH THIS PROVISION. THE NEW YORK STATE INSURANCE FUND DOES NOT ASSUME ANY LIABILITY IN THE EVENT OF FAILURE TO GIVE SUCH NOTICE.

THIS CERTIFICATE DOES NOT APPLY TO BUILDING DEMOLITION.

THIS CERTIFICATE IS ISSUED AS A MATTER OF INFORMATION ONLY AND CONFERS NO RIGHTS NOR INSURANCE COVERAGE UPON THE CERTIFICATE HOLDER. THIS CERTIFICATE DOES NOT AMEND, EXTEND OR ALTER THE COVERAGE AFFORDED BY THIS POLICY.

THIS POLICY IS CANCELLED EFFECTIVE

SAMPLE

NEW YORK STATE INSURANCE FUND

Vincent M. Isacsville

DIRECTOR, INSURANCE FUND UNDERWRITING

This certificate can be validated on our web site at https://www.nysif.com/cert/certval.asp

VALIDATION NUMBER: 37185081-

STATE OF NEW YORK
WORKERS' COMPENSATION BOARD
20 PARK STREET
ALBANY, NY 12207

THIS AGENCY EMPLOYS AND SERVES PEOPLE WITH DISABILITIES WITHOUT DISCRIMINATION.

JEFFREY R. SWEET
ACTING CHAIRMAN

Office of the Secretary

I, , Secretary to the Workers' Compensation Board of the State of New York

DO HEREBY CERTIFY, that . has secured compensation to its employees as a self-insurer in the following manner:

_____ Pursuant to Section 50, subdivision 3 of the Workers' Compensation Law.

_____ Pursuant to Section 50, subdivisions 3 and 4 of the Workers' Compensation Law. (County, city, village, town, school district, fire district or other political subdivision)

_____ Pursuant to Article 5 of the Workers' Compensation Law. (County Self-Insurance Plan)

The status of self-insurer was effective as of and such status still remains in full force.

IN WITNESS WHEREOF, I have hereunto set my hand and affixed the seal of the Workers' Compensation Board this .....day of 20___

SAMPLE

STATUS CONFIRMED

by.....

.....
Secretary to the Board

STATE OF NEW YORK
WORKERS' COMPENSATION BOARD

CERTIFICATE OF PARTICIPATION IN WORKERS' COMPENSATION GROUP SELF-INSURANCE

1a. Legal Name and Address of Business Participating in Group Self-Insurance (Use Street Address Only)	1d. Business Telephone Number of Business referenced in box "1a" 1e. NYS Unemployment Insurance Employer Registration Number of Business referenced in box "1a"
1b. Effective Date of Membership in the Group _____.	
1c. The Proprietor, Partners or Executive Officers are ☐ included (only check box if all partners/officers included) ☐ all excluded or certain partners/officers excluded	1f. Federal Employer Identification Number of Business referenced in Box "1a"
2. Name and Address of the Entity Requesting Proof of Coverage (Entity Being Listed as Certificate Holder)	3. Name and Address of Group Self-Insurer

SAMPLE

This certifies that the business referenced above in box "1a" is complying with the mandatory coverage requirements of the New York State Workers' Compensation Law as a participating member of the Group Self-Insurer listed above in box "3" and participation in such group self-insurance is still in force. The Group Self-Insurer's Administrator will send this Certificate of Participation to the entity listed above as the certificate holder in box "2".

The Group Self-Insurer's Administrator will notify the above certificate holder within 10 days IF the membership of the participant listed in box "1a" is terminated. (These notices may be sent by regular mail.) Otherwise, this Certificate is valid for a maximum of one year from the date certified by the group self-insurer.

If this certificate is not renewed according to the above guidelines and the business referenced in box "1a" continues to be named on a permit, license or contract issued by the certificate holder, the business must provide the certificate holder either with a new certificate or other authorized proof the business is complying with the mandatory coverage requirements of the New York State Workers' Compensation Law.

Under penalty of perjury, I certify that I am an authorized representative of the Group Self-Insurer referenced above and that the business referenced in box "1a" has the coverage as depicted on this form.

Certified by: _____
(Print name of authorized representative of the Group Self-Insurer)

Certified by: _____ _____
(Signature) (Date)

Title: _____

Telephone Number: _____

GSI-105.2 (2-02)

LIABILITY AND PENALTIES FOR VIOLATIONS OF MANDATORY WORKERS' COMPENSATION INSURANCE COVERAGE REQUIREMENTS

Ascertaining Violations of the Law

The Workers' Compensation Board may require an employer to furnish proof that the employer:

- has a valid workers' compensation insurance policy;
- is self-insured for workers' compensation; or
- is legally exempt from having to obtain workers' compensation coverage.

If an employer fails to provide this information within 10 days following the Board's request, the Board assumes that the employer is violating the Workers' Compensation Law (WCL).

Personal Accountability

The sole proprietor or the partners of a business, or the President, Secretary and Treasurer of a corporation are personally liable for the business' failure to secure workers' compensation insurance.

Liability for Claims Incurred by an Uninsured Employer – Section 26-a of the WCL

The employer is liable for paying an assessment of $250 for each claim incurred while uninsured plus 15% of the amount awarded (minimum of $1,500--maximum of $5,000) plus the actual award (including both compensation and medical costs) plus any penalties the Board assesses for noncompliance. In cases involving severely injured employees, the medical costs alone could be in the hundreds of thousands of dollars per injury!!!

Penalties for Noncompliance

1) **Section 52-5 of the WCL** – The Board may impose upon an employer, in addition to all other penalties, a fine of $250 for each 10-day period of noncompliance or 2 percent of the employer's payroll during the period of noncompliance. The fine of $250 for each 10-day period of noncompliance is the most commonly imposed penalty for noncompliance.

2) **Section 52-1 of the WCL** -- Not securing workers' compensation insurance is a misdemeanor -- punishable by a fine of not less than $500 nor more than $2,500 or imprisonment for up to one year. A second violation of the Law within five years may result in a fine of not less than $1,000 nor more than $5,000. A third or subsequent violation of the Law within five years may result in a fine of up to $7,500. The Board enforces these penalties against employers for blatant cases of abuse and levies them in addition to penalties contained in paragraph "1", and liabilities and penalties incurred for claims incurred while uninsured.

Additional Liability for Uninsured Employers

1) An uninsured employer is responsible for obtaining and paying for any legal representation required to defend against a workers' compensation claim. *(An insured employer's workers' compensation insurance carrier provides such representation as part of the workers' compensation insurance policy's coverage.)*

2) An uninsured employer can be directly sued by an injured employee. *(In most cases, an employer's workers' compensation insurance is the sole recourse for the employer's injured employees.)*

STATE OF NEW YORK
WORKERS' COMPENSATION BOARD

THIS AGENCY EMPLOYS AND SERVES PEOPLE WITH DISABILITIES WITHOUT DISCRIMINATION.

EMPLOYER'S APPLICATION FOR CERTIFICATE OF COMPLIANCE WITH DISABILITY BENEFITS LAW

INSTRUCTIONS TO EMPLOYER: Complete PART 1 ONLY and have your Disability Benefits Insurance Carrier complete Part 2.

PART 1. TO BE COMPLETED BY EMPLOYER

EMPLOYER'S NAME AND ADDRESS (Home or Main Office)	LOCATION OF OPERATIONS
NAME UNDER WHICH BUSINESS IS CONDUCTED, IF DIFFERENT FROM ABOVE	OPERATIONS TO BEGIN ON OR ABOUT:
DISABILITY BENEFITS CARRIER (If more than one, list all)	NYS UNEMPLOYMENT INSURANCE EMPLOYER'S REG. NO.

Application is hereby made to the CARRIER for a Certificate of Compliance with the Disability Benefits Law.

Date Signed_____ By_____
(Signature of owner, partner or authorized officer)

Tel. No.: (_____ Title_____

PART 2. TO BE COMPLETED BY DISABILITY BENEFITS CARRIER

CERTIFICATE OF COMPLIANCE WITH DISABILITY BENEFITS LAW

This is to certify that the above employer is insured with_____

and that the policy covers: * a. ☐ ALL of the EMPLOYER's employees eligible under the New York Disability Benefits Law.

* b. ☐ ONLY the following classification(s) of EMPLOYER's employees:

Date Signed_____ By_____
(Signature of carrier's authorized representative (currently on file with DB Bureau))

Tel. No.: (_____ Title_____

*IMPORTANT: If Box "a" is checked, this certificate is COMPLETE. Mail it directly to the employer.
If Box "b" is checked, this certificate is NOT COMPLETE for purposes of Section 220, subd. 8 of the Disability Benefits Law. It must be mailed for completion to the Workers' Compensation Board, Disability Benefits Bureau, 100 Broadway Menands, Albany, NY 12241-0005.

PART 3. TO BE COMPLETED BY WORKERS' COMPENSATION BOARD (Only if box "b" of Part 2 has been checked)

STATE OF NEW YORK
WORKERS' COMPENSATION BOARD

There is on file with the Workers' Compensation Board, Certificate of Insurance indicating that the above-named employer has complied with the Disability Benefits Law with respect to all of his/her employees.

DISABILITY BENEFITS BUREAU

Date Signed_____ By_____

Tel. No.: (____)_____ Title_____

SAMPLE

STATE OF NEW YORK WORKERS' COMPENSATION BOARD
DISABILITY BENEFITS LAW

CERTIFICATE/CANCELLATION OF INSURANCE

Filed on behalf of Employer in compliance with Article 9 of the Workers' Compensation Law

☐ Initial ☐ Cancellation ☐ Reinstatement ☐ Supersedes Transaction Effective Date:

A. INSURER/CARRIER

1. INSURER/CARRIER NAME	2. INSURER/CARRIER CODE	3. INSURER/CARRIER TELEPHONE NO.
4. CONTACT NAME	5. TITLE	6. TODAY'S DATE

B. CURRENT EMPLOYER INFORMATION

7. WCB EMPLOYER NUMBER	8. NYS UIER NUMBER	9. EMPLOYER FEIN
10. EMPLOYER'S LEGAL NAME, INCLUDING (DBA/AKA/ITA)		13. LEGAL STATUS (SEE BACK OF FORM)
11. ADDRESS		14. # OF EMPLOYEES
12. CITY STATE ZIP CODE		15. TELEPHONE NO.

C. POLICY

*If policyholder is an Association, Union or Trustee for which Form DB-820.3 is filed, do not complete items 16 and 18.

16. POLICY NUMBER*	17. POLICY EFFECTIVE DATE	18. POLICY FORM NUMBER*
19. WCB PLAN NUMBER (Only for Assoc., Union or Trustee with Form DB-801 on file.)		20. PREMIUM AMOUNT

D. REASONS FOR CANCELLATION

☐ Non-Payment of Premium
☐ Not Subject/No Eligible Employees... Date:
☐ Out of Business..... Date:
☐ Seasonal..... Date:
☐ Other

CANCELLATION OR TERMINATION SENT TO EMPLOYER: Date:

E. COMPLETE IF SUPERSEDES CONTRACT

21. EMPLOYER'S LEGAL NAME, INCLUDING (DBA/AKA/ITA)	27. POLICYHOLDER NAME
22. ADDRESS	28. POLICYHOLDER ADDRESS
23. CITY STATE ZIP CODE	29. CITY STATE ZIP CODE
24. EMPLOYER FEIN / 25. POLICY EFFECTIVE DATE	30. POLICYHOLDER FEIN
26. POLICY NUMBER	

G.

1. The policy covers Employer's employees as follows:
   - a. ____ All employees eligible under the New York State Disability Benefits Law.
   - b. ____ All employees eligible under the New York State Disability Benefits Law except those classes of employees eligible to receive benefits under another policy or plan accepted by the Chair.
   - c. ____ Only the following class or classes of employees:

2. The employee contributions required and benefits insured are:
   - a. ____ The same in all respects as under Section 204 and not in excess of those authorized under Section 209.
   - b. ____ As described in the attached supplement, Form DB820.1.
   - c. ____ As described in Employer's Application for Acceptance of a Plan, Form DB800, filed with and accepted by the Chair.
   - d. ____ As described in Certificate of Insurance, Form DB820.3, filed on behalf of the Association, Union or Trustees (policyholders) on _____ (DATE) or amended Form DB820.3 filed thereafter.

To be filed by Insurance Carrier on behalf of Employer to provide, through insurance, exactly statutory benefits, (Section 204) OR benefits under a plan accepted by the the Chairman.

SAMPLE

STATE OF NEW YORK
WORKERS' COMPENSATION BOARD
SELF-INSURANCE OFFICE
20 PARK STREET - ROOM 201
ALBANY, NY 12207

THIS AGENCY EMPLOYS AND SERVES PEOPLE WITH DISABILITIES WITHOUT DISCRIMINATION.

ROBERT R. SNASHALL
CHAIRMAN

COMPLIANCE WITH DISABILITY BENEFITS LAW

(Pursuant To Section 220, subd. 3 of the Disability Benefits Law)

EMPLOYER	EMPLOYER REGISTRATION NUMBER
	LOCATION OF ORGANIZATION
ADDRESS (HOME OR MAIN OFFICE)	OPERATIONS TO BE GIVEN ABOUT:

SAMPLE

There are on file with the Workers' Compensation Board, documents indicating that the above-named employer has complied with the Disability Benefits Law with respect to all of his or her employees, in the following manner:

_____ By appropriate insurance pursuant to Sec. 211, subd. 3 of the Disability Benefits Law.

_____ By a combination of approved self-insurance pursuant to Sec. 211, subd. 3 of the Disability Benefits Law and insurance with authorized insurance carrier(s).

Date: _____ By _____

Title W.C. Examiner

DB-155 (1/98)

APPENDIX C

David A. Paterson, Governor

Colleen C. Gardner, Commissioner

Onondaga County Dept. WEP

Kristin Angello, P.E., Project Manager
Arcadis of New York Inc.
6723 Towpath Road
Syracuse NY 13214-0066

Schedule Year 2009 through 2010
Date Requested 05/12/2010
PRC# 2010004211

Location City of Syracuse (Southwest)
Project ID#
Project Type Installation of 500 linear feet of 96-inch diameter CSO pipeline.

PREVAILING WAGE SCHEDULE FOR ARTICLE 8 PUBLIC WORK PROJECT

Attached is the current schedule(s) of the prevailing wage rates and prevailing hourly supplements for the project referenced above. A unique Prevailing Wage Case Number (PRC#) has been assigned to the schedule(s) for your project.

The schedule is effective from July 2009 through June 2010. All updates, corrections, posted on the 1st business day of each month, and future copies of the annual determination are available on the Department's website www.labor.state.ny.us. Updated PDF copies of your schedule can be accessed by entering your assigned PRC# at the proper location on the website.

It is the responsibility of the contracting agency or its agent to annex and make part, the attached schedule, to the specifications for this project, when it is advertised for bids and /or to forward said schedules to the successful bidder(s), immediately upon receipt, in order to insure the proper payment of wages.

Please refer to the "General Provisions of Laws Covering Workers on Public Work Contracts" provided with this schedule, for the specific details relating to other responsibilities of the Department of Jurisdiction.

Upon completion or cancellation of this project, enter the required information and mail **OR** fax this form to the office shown at the bottom of this notice, **OR** fill out the electronic version via the NYSDOL website.

NOTICE OF COMPLETION / CANCELLATION OF PROJECT

Date Completed: _____ Date Cancelled: _____

Name & Title of Representative: _____

Phone: (518) 457-5589 Fax: (518) 485-1870
W. Averell Harriman State Office Campus, Bldg. 12, Room 130, Albany, NY 12240

General Provisions of Laws Covering Workers on Article 8 Public Work Contracts

Introduction

The Labor Law requires public work contractors and subcontractors to pay laborers, workers, or mechanics employed in the performance of a public work contract not less than the prevailing rate of wage and supplements (fringe benefits) in the locality where the work is performed.

Responsibilities of the Department of Jurisdiction

A Department of Jurisdiction (Contracting Agency) includes a state department, agency, board or commission: a county, city, town or village; a school district, board of education or board of cooperative educational services; a sewer, water, fire, improvement and other district corporation; a public benefit corporation; and a public authority awarding a public work contract.

The Department of Jurisdiction (Contracting Agency) awarding a public work contract MUST obtain a Prevailing Rate Schedule listing the hourly rates of wages and supplements due the workers to be employed on a public work project. This schedule may be obtained by completing and forwarding a "Request for wage and Supplement Information" form (PW 39) to the Bureau of Public Work. The Prevailing Rate Schedule MUST be included in the specifications for the contract to be awarded and is deemed part of the public work contract.

Upon the awarding of the contract, the law requires that the Department of Jurisdiction (Contracting Agency) furnish the following information to the Bureau: the name and address of the contractor, the date the contract was let and the approximate dollar value of the contract. To facilitate compliance with this provision of the Labor Law, a copy of the Department's "Notice of Contract Award" form (PW 16) is provided with the original Prevailing Rate Schedule.

The Department of Jurisdiction (Contracting Agency) is required to notify the Bureau of the completion or cancellation of any public work project. The Department's PW 200 form is provided for that purpose.

Hours

No laborer, worker, or mechanic in the employ of a contractor or subcontractor engaged in the performance of any public work project shall be permitted to work more than eight hours in any day or more than five days in any week, except in cases of extraordinary emergency. The contractor and the Department of Jurisdiction (Contracting Agency) may apply to the Bureau of Public Work for a dispensation permitting workers to work additional hours or days per week on a particular public work project.

Wages and Supplements

The wages and supplements to be paid and/or provided to laborers, workers, and mechanics employed on a public work project shall be not less than those listed in the current Prevailing Rate Schedule for the locality where the work is performed. If a prime contractor on a public work project has not been provided with a Prevailing Rate Schedule, the contractor must notify the Department of Jurisdiction (Contracting Agency) who in turn must request an original Prevailing Rate Schedule form the Bureau of Public Work. Requests may be submitted by: mail to NYSDOL, Bureau of Public Work, State Office Bldg. Campus, Bldg. 12, Rm. 130, Albany, NY 12240; Fax to Bureau of Public Work (518) 485-1870; or electronically at the NYSDOL website www.labor.state.ny.us.

Upon receiving the original schedule, the Department of Jurisdiction (Contracting Agency) is REQUIRED to provide complete copies to all prime contractors who in turn MUST, by law, provide copies of all applicable county schedules to each subcontractor and obtain from each subcontractor, an affidavit certifying such schedules were received. If the original schedule expired, the contractor may obtain a copy of the new annual determination from the NYSDOL website www.labor.state.ny.us.

The Commissioner of Labor makes an annual determination of the prevailing rates. This determination is in effect from July 1st through June 30th of the following year. The annual determination is available on the NYSDOL website www.labor.state.ny.us.

Payrolls and Payroll Records

Every contractor and subcontractor MUST keep original payrolls or transcripts subscribed and affirmed as true under penalty of perjury. Payrolls must be maintained for at least three (3) years from the project's date of completion. At a minimum, payrolls must show the following information for each person employed on a public work project: Name, Social Security number, Classification(s) in which the worker was employed, Hourly wage rate(s) paid, Supplements paid or provide, and Daily and weekly number of hours worked in each classification.

Every contractor and subcontractor shall submit to the Department of Jurisdiction (Contracting Agency), within thirty (30) days after issuance of its first payroll and every thirty (30) days thereafter, a transcript of the original payrolls, subscribed and affirmed as true under penalty of perjury. The Department of Jurisdiction (Contracting Agency) shall receive and maintain such payrolls.

In addition, the Commissioner of Labor may require contractors to furnish, with ten (10) days of a request, payroll records sworn to as their validity and accuracy for public work and private work. Payroll records include, by are not limited to time cards, work description sheets, proof that supplements were provided, cancelled payroll checks and payrolls. Failure to provide the requested information within the allotted ten (10) days will result in the withholding of up to 25% of the contract, not to exceed $100,000.00. If the contractor or subcontractor does not maintain a place of business in New York State and the amount of the contract exceeds $25,000.00, payroll records and certifications must be kept on the project worksite.

The prime contractor is responsible for any underpayments of prevailing wages or supplements by any subcontractor.

All contractors or their subcontractors shall provide to their subcontractors a copy of the Prevailing Rate Schedule specified in the public work contract as well as any subsequently issued schedules. A failure to provide these schedules by a contractor or subcontractor is a violation of Article 8, Section 220-a of the Labor Law.

All subcontractors engaged by a public work project contractor or its subcontractor, upon receipt of the original schedule and any subsequently issued schedules, shall provide to such contractor a verified statement attesting that the subcontractor has received the Prevailing Rate Schedule and will pay or provide the applicable rates of wages and supplements specified therein. (See NYS Labor Laws, Article 8 . Section 220-a).

Determination of Prevailing Wage and Supplement Rate Updates Applicable to All Counties

The wages and supplements contained in the annual determination become effective July 1st whether or not the new determination has been received by a given contractor. Care should be taken to review the rates for obvious errors. Any corrections should be brought to the Department's attention immediately. It is the responsibility of the public work contractor to use the proper rates. If there is a question on the proper classification to be used, please call the district office located nearest the project. Any errors in the annual determination will be corrected and posted to the NYSDOL website on the first business day of each month. Contractors are responsible for paying these updated rates as well, retroactive to July 1st.

When you review the schedule for a particular occupation, your attention should be directed to the dates above the column of rates. These are the dates for which a given set of rates is effective. To the extent possible, the Department posts rates in its possession that cover periods of time beyond the July 1st to June 30th time frame covered by a particular annual determination. Rates that extend beyond that instant time period are informational ONLY and may be updated in future annual determinations that actually cover the then appropriate July 1st to June 30th time period.

Withholding of Payments

When a complaint is filed with the Commissioner of Labor alleging the failure of a contractor or subcontractor to pay or provide the prevailing wages or supplements, or when the Commissioner of Labor believes that unpaid wages or supplements may be due, payments on the public work contract shall be withheld from the prime contractor in a sufficient amount to satisfy the alleged unpaid wages and supplements, including interest and civil penalty, pending a final determination.

When the Bureau of Public Work finds that a contractor or subcontractor on a public work project failed to pay or provide the requisite prevailing wages or supplements, the Bureau is authorized by Sections 220-b of the Labor Law to so notify the financial officer of the Department of Jurisdiction (Contracting Agency) that awarded the public work contract. Such officer MUST then withhold or cause to be withheld from any payment due the prime contractor on account of such contract the amount indicated by the Bureau as sufficient to satisfy the unpaid wages and supplements, including interest and any civil penalty that may be assessed by the Commissioner of Labor. The withholding continues until there is a final determination of the underpayment by the Commissioner of Labor or by the court in the event a legal proceeding is instituted for review of the determination of the Commissioner of Labor.

The Department of Jurisdiction (Contracting Agency) shall comply with this order of the Commissioner of Labor or of the court with respect to the release of the funds so withheld.

Summary of Notice Posting Requirements

The current Prevailing Rate Schedule must be posted in a prominent and accessible place on the site of the public work project. The prevailing wage schedule must be encased in, or constructed of, materials capable of withstanding adverse weather conditions and be titled "PREVAILING RATE OF WAGES" in letters no smaller than two (2) inches by two (2) inches.

Every employer providing workers. compensation insurance and disability benefits must post notices of such coverage in the format prescribed by the Workers. Compensation Board in a conspicuous place on the jobsite.

Every employer subject to the NYS Human Rights Law must conspicuously post at its offices, places of employment, or employment training centers, notices furnished by the State Division of Human Rights.

Employers liable for contributions under the Unemployment Insurance Law must conspicuously post on the jobsite notices furnished by the NYS Department of Labor.

Apprentices

Employees cannot be paid apprentice rates unless they are individually registered in a program registered with the NYS Commissioner of Labor. The allowable ratio of apprentices to journeyworkers in any craft classification can be no greater than the statewide building trade ratios promulgated by the Department of Labor and included with the Prevailing Rate Schedule. An employee listed on a payroll as an apprentice who is not registered as above or is performing work outside the classification of work for which the apprentice is indentured, must be paid the prevailing journeyworker's wage rate for the classification of work the employee is actually performing.

NYSDOL Labor Law, Article 8, Section 220-3, require that only apprentices individually registered with the NYS Department of Labor may be paid apprenticeship rates on a public work project. No other Federal or State Agency of office registers apprentices in New York State.

Persons wishing to verify the apprentice registration of any person must do so in writing by mail, to the NYSDOL Office of Employability Development / Apprenticeship Training, State Office Bldg. Campus, Bldg. 12, Albany, NY 12240 or by Fax to NYSDOL Apprenticeship Training (518) 457-7154. All requests for verification must include the name and social security number of the person for whom the information is requested.

The only conclusive proof of individual apprentice registration is written verification from the NYSDOL Apprenticeship Training Albany Central office. Neither Federal nor State Apprenticeship Training offices outside of Albany can provide conclusive registration information.

It should be noted that the existence of a registered apprenticeship program is not conclusive proof that any person is registered in that program. Furthermore, the existence or possession of wallet cards, identification cards, or copies of state forms is not conclusive proof of the registration of any person as an apprentice.

Interest and Penalties

In the event that an underpayment of wages and/or supplements is found:

- Interest shall be assessed at the rate then in effect as prescribed by the Superintendent of Banks pursuant to section 14-a of the Banking Law, per annum from the date of underpayment to the date restitution is made.
- A Civil Penalty may also be assessed, not to exceed 25% of the total of wages, supplements, and interest due.

Debarment

Any contractor or subcontractor and/or its successor shall be ineligible to submit a bid on or be awarded any public work contract or subcontract with any state, municipal corporation or public body for a period of five (5) years when:

- Two (2) willful determinations have been rendered against that contractor or subcontractor and/or its successor within any consecutive six (6) year period.
- There is any willful determination that involves the falsification of payroll records or the kickback of wages or supplements.

Criminal Sanctions

Willful violations of the Prevailing Wage Law (Article 8 and Article 9 of the Labor Law) constitute a misdemeanor punishable by fine or imprisonment, or both.

Discrimination

No employee or applicant for employment may be discriminated against on account of age, race, creed, color, national origin, sex, disability or marital status.

No contractor, subcontractor nor any person acting on its behalf, shall by reason of race, creed, color, disability, sex or national origin discriminate against any citizen of the State of New York who is qualified and available to perform the work to which the employment relates (NYS Labor Law, Article 8, Section 220-e(a)).

No contractor, subcontractor, nor any person acting on its behalf, shall in any manner, discriminate against or intimidate any employee on account of race, creed, color, disability, sex, or national origin (NYS Labor Law, Article 8, Section 220-e(b)).

The Human Rights Law also prohibits discrimination in employment because of age, marital status, or religion.

There may be deducted from the amount payable to the contractor under the contract a penalty of $50.00 for each calendar day during which such person was discriminated against or intimidated in violation of the provision of the contract (NYS Labor Law, Article 8, Section 220-e(c)).

The contract may be cancelled or terminated by the State or municipality. All monies due or to become due thereunder may be forfeited for a second or any subsequent violation of the terms or conditions of the anti-discrimination sections of the contract (NYS Labor Law, Article 8, Section 220-e(d)).

Every employer subject to the New York State Human Rights Law must conspicuously post at its offices, places of employment, or employment training centers notices furnished by the State Division of Human Rights.

Workers' Compensation

In accordance with Section 142 of the State Finance Law, the contractor shall maintain coverage during the life of the contract for the benefit of such employees as required by the provisions of the New York State Workers' Compensation Law.

A contractor who is awarded a public work contract must provide proof of workers' compensation coverage prior to being allowed to begin work.

The insurance policy must be issued by a company authorized to provide workers' compensation coverage in New York State. Proof of coverage must be on form C-105.2 (Certificate of Workers' Compensation Insurance) and must name this agency as a certificate holder.

If New York State coverage is added to an existing out-of-state policy, it can only be added to a policy from a company authorized to write workers' compensation coverage in this state. The coverage must be listed under item 3A of the information page.

The contractor must maintain proof that subcontractors doing work covered under this contract secured and maintained a workers' compensation policy for all employees working in New York State.

Every employer providing worker's compensation insurance and disability benefits must post notices of such coverage in the format prescribed by the Workers' Compensation Board in a conspicuous place on the jobsite.

Unemployment Insurance

Employers liable for contributions under the Unemployment Insurance Law must conspicuously post on the jobsite notices furnished by the New York State Department of Labor.

David A. Paterson, Governor

Colleen C. Gardner, Commissioner

Onondaga County Dept. WEP

Kristin Angello, P.E., Project Manager
Arcadis of New York Inc.
6723 Towpath Road
Syracuse NY 13214-0066

Schedule Year 2009 through 2010
Date Requested 05/12/2010
PRC# 2010004211

Location City of Syracuse (Southwest)
Project ID#
Project Type Installation of 500 linear feet of 96-inch diameter CSO pipeline.

Notice of Contract Award

New York State Labor Law, Article 8, Section 220.3a requires that certain information regarding the awarding of public work contracts, be furnished to the Commissioner of Labor. One "Notice of Contract Award" (PW 16, which may be photocopied), **MUST** be completed for **EACH** prime contractor on the above referenced project.

Upon notifying the successful bidder(s) of this contract, enter the required information and mail **OR** fax this form to the office shown at the bottom of this notice, **OR** fill out the electronic version via the NYSDOL website.

Contractor Information
All information must be supplied

Federal Employer Identification Number: _____

Name: _____

Address: _____

_____

City: _____ State: _____ Zip: _____

Amount of Contract: $_____

Approximate Starting Date: ___/___/___

Approximate Completion Date: ___/___/___

Contract Type:
[ ] (01) General Construction
[ ] (02) Heating/Ventilation
[ ] (03) Electrical
[ ] (04) Plumbing
[ ] (05) Other : _____

Phone: (518) 457-5589 Fax: (518) 485-1870
W. Averell Harriman State Office Campus, Bldg. 12, Room 130, Albany, NY 12240

IMPORTANT NOTICE

FOR

CONTRACTORS & CONTRACTING AGENCIES

Social Security Numbers on Certified Payrolls

The Department of Labor is cognizant of the concerns of the potential for misuse or inadvertent disclosure of social security numbers. Identity theft is a growing problem and we are sympathetic to contractors' concerns with regard to inclusion of this information on payrolls if another identifier will suffice.

For these reasons, ***the substitution of the use of the last four digits of the social security number on certified payrolls submitted to contracting agencies on public work projects is now acceptable to the Department of Labor.***

NOTE: This change does not affect the Department's ability to request and receive the entire social security number from employers during the course of its public work / prevailing wage investigations.

To all State Departments, Agency Heads and Public Benefit Corporations
IMPORTANT NOTICE REGARDING PUBLIC WORK ENFORCEMENT FUND

Budget Policy & Reporting Manual

B-610

Public Work Enforcement Fund

effective date December 7, 2005

---

1. Purpose and Scope:

This Item describes the Public Work Enforcement Fund (the Fund, PWEF) and its relevance to State agencies and public benefit corporations engaged in construction or reconstruction contracts, and announces the recently-enacted increase to the percentage of the dollar value of such contracts that must be deposited into the Fund. This item also describes the roles of the following entities with respect to the Fund:

- New York State Department of Labor (DOL),
- The Office of the State of Comptroller (OSC), and
- State agencies and public benefit corporations.

2. Background and Statutory References:

DOL uses the Fund to enforce the State's Labor Law as it relates to contracts for construction or reconstruction as defined in subdivision two of Section 220 of the Labor Law. State agencies and public benefit corporations participating in such contracts are required to make payments to the Fund.

Chapter 511 of the Laws of 1995 (as amended by Chapter 513 of the Laws of 1997, Chapter 655 of the Laws of 1999, Chapter 376 of the Laws of 2003 and Chapter 407 of the Laws of 2005) established the Fund.

3. Procedures and Agency Responsibilities:

The Fund is supported by transfers and deposits based on the value of contracts for construction and reconstruction, as defined in subdivision two of Section 220 of the Labor Law, into which all State agencies and public benefit corporations enter.

Chapter 407 of the Laws of 2005 increased the amount required to be provided to this fund to .10 of one-percent of the total cost of each such contract, to be calculated at the time agencies or public benefit corporations enter into a new contract or if a contract is amended. The provisions of this bill became effective August 2, 2005.

To all State Departments, Agency Heads and Public Benefit Corporations
IMPORTANT NOTICE REGARDING PUBLIC WORK ENFORCEMENT FUND

OSC will report to DOL on all construction-related ("D") contracts approved during the month, including contract amendments, and then DOL will bill agencies the appropriate assessment monthly. An agency may then make a determination if any of the billed contracts are exempt and so note on the bill submitted back to DOL. For any instance where an agency is unsure if a contract is or is not exempt, they can call the Bureau of Public Work at the number noted below for a determination. Payment by check or journal voucher is due to DOL within thirty days from the date of the billing. DOL will verify the amounts and forward them to OSC for processing.

For those contracts which are not approved or administered by the Comptroller, monthly reports and payments for deposit into the Public Work Enforcement Fund must be provided to the Administrative Finance Bureau at the DOL within 30 days of the end of each month or on a payment schedule mutually agreed upon with DOL.

Reports should contain the following information:

- Name and billing address of State agency or public benefit corporation;
- State agency or public benefit corporation contact and phone number;
- Name and address of contractor receiving the award;
- Contract number and effective dates;
- Contract amount and PWEF assessment charge (if contract amount has been amended, reflect increase or decrease to original contract and the adjustment in the PWEF charge); and
- Brief description of the work to be performed under each contract.

Checks and Journal Vouchers, payable to the "New York State Department of Labor" should be sent to:

Department of Labor
Administrative Finance Bureau-PWEF Unit
Building 12, Room 464
State Office Campus
Albany, NY 12240

Any questions regarding billing should be directed to NYSDOL's Administrative Finance Bureau-PWEF Unit at (518) 457-3624 and any questions regarding Public Work Contracts should be directed to the Bureau of Public Work at (518) 457-5589.

NEW LEGISLATION

Effective February 24, 2008

WORKER NOTIFICATION – A9052 – S6240

This provision is an addition to the existing prevailing wage rate law, Labor Law §220, paragraph a of subdivision 3-a. It requires contractors and subcontractors to provide written notice to all laborers, workers or mechanics of the *prevailing wage rate* for their particular job classification *on each pay stub**. It also requires contractors and subcontractors to *post a notice* at the beginning of the performance of every public work contract *on each job site* that includes the telephone number and address for the Department of Labor and a statement informing laborers, workers or mechanics of their right to contact the Department of Labor if he/she is not receiving the proper prevailing rate of wages and/or supplements for his/her particular job classification. The required notification will be provided with each wage schedule, may be downloaded from our website *www.labor.state.ny.us* or made available upon request by contacting the Bureau of Public Work at 518-457-5589.

* In the event that the required information will not fit on the pay stub, an accompanying sheet or attachment of the information will suffice.

NEW YORK STATE DEPARTMENT OF LABOR
BUREAU OF PUBLIC WORK
State Office Building Campus • Building 12 • Room 130
Albany, New York 12240

THIS IS A PUBLIC WORK PROJECT

Any worker, laborer, or mechanic employed on this project is entitled to receive the ***prevailing wage and supplements*** rate for the classification at which he/she is working.

Chapter 629 of the Labor Laws of 2007

These wages are set by law and must be posted at the work site. They can also be found at ***www.labor.state.ny.us***

If you feel that you have not received proper wages or benefits, please call our nearest office. *

Albany	(518) 457-2744	**Newburgh**	(845) 568-5398
Binghamton	(607) 721-8005	**Patchogue**	(631) 687-4886
Buffalo	(716) 847-7159	**Rochester**	(585) 258-4505
Garden City	(516) 228-3915	**Syracuse**	(315) 428-4056
New York City	(212) 775-3568	**Utica**	(315) 793-2314
		White Plains	(914) 997-9507

** For New York City government agency construction projects, please contact the Office of the NYC Comptroller at (212) 669-4443,* ***www.comptroller.nyc.gov*** *- click on Bureau of Labor Law.*

Contractor Name: _____

Project Location: _____

STATE OF NEW YORK
David A. Paterson, Governor

DEPARTMENT OF LABOR
Colleen C. Gardner, Commissioner

NEW LEGISLATION

Effective July 18, 2008

OSHA 10-hour Construction Safety and Health Course – S1537-A

This provision is an addition to the existing prevailing wage rate law, Labor Law §220, section 220-h. It requires that on all public work projects of at least $250,000.00, all laborers, workers and mechanics working on the site, be certified as having successfully completed the OSHA 10-hour construction safety and health course. It further requires that the advertised bids and contracts for every public work contract of at least $250,000.00, contain a provision of this requirement.

NOTE: *The OSHA 10 Legislation does not apply to projects advertised for bid prior to July 18, 2008 AND only applies to workers on a public work project that are required under Article 8 to receive the prevailing wage.*

Rules and regulations will be promulgated and posted on the NYSDOL website www.labor.state.ny.us when finalized.

Where to find OSHA 10-hour Construction Course

1. NYS Department of Labor website for scheduled outreach training at:
   www.labor.state.ny.us/workerprotection/safetyhealth/DOSH_ONSITE_CONSULTATION.shtm

2. OSHA Training Institute Education Centers:

   Rochester Institute of Technology OSHA Education Center
   Rochester, NY
   Donna Winter
   Fax (585) 475-6292
   e-mail: dlwtpo@rit.edu
   (866) 385-7470 Ext. 2919
   www.rit.edu/~outreach/course.php3?CourseID=54

   Atlantic OSHA Training Center
   UMDNJ – School of Public Health
   Piscataway, NJ
   Janet Crooks
   Fax (732) 235-9460
   e-mail: crooksje@umdnj.edu
   (732) 235-9455
   https://ophp.umdnj.edu/wconnect/ShowSchedule.awp?~~GROUP~AOTCON~10~

   Keene State College
   Manchester, NH
   Leslie Singleton
   e-mail: lsingletin@keene.edu
   (800) 449-6742
   www.keene.edu/courses/print/courses_osha.cfm

3. List of trainers and training schedules for OSHA outreach training at:
   www.OutreachTrainers.org

Requirements for OSHA 10 Compliance

Chapter 282 of the Laws of 2007, codified as Labor Law 220-h will take effect on July 18, 2008. The statute provides as follows:

The advertised specifications for every contract for public work of $250,000.00 or more must contain a provision requiring that every worker employed in the performance of a public work contract shall be certified as having completed an OSHA 10 safety training course. The clear intent of this provision is to require that all employees of public work contractors receive such training "prior to the performing any work on the project."

The Bureau will enforce the statute as follows:

All contractors and sub contractors must attach a copy of proof of completion of the OSHA 10 course to the first certified payroll submitted to the contracting agency and on each succeeding payroll where any new or additional employee is first listed.

Proof of completion may include but is not limited to:

- copies of bona fide course completion card;
- training roster, attendance record of other documentation from the certified trainer pending the issuance of the card.
- other valid proof

**A certification by the employer attesting that all employees have completed such course is not sufficient proof that the course has been completed.

Any questions regarding this statute may be directed to the New York State Department of Labor, Bureau of Public Work at 518-485-5696.

WICKS Reform 2008

(For all contracts advertised or solicited for bid on or after 7/1/08)

- Raises the threshold for public work projects subject to the Wicks Law requiring separate specifications and bidding for the plumbing, heating and electrical work. The total project's threshold would increase from $50,000 to: $3 million in Bronx, Kings, New York, Queens and Richmond counties; $1.5 million in Nassau, Suffolk and Westchester counties; and $500,000 in all other counties.

- For projects below the monetary threshold, bidders must submit a sealed list naming each subcontractor for the plumbing, HVAC and electrical work and the amount to be paid to each. The list may not be changed unless the public owner finds a legitimate construction need, including a change in specifications or costs or use of a Project Labor Agreement (PLA), and must be open to public inspection.

- Allows the state and local agencies and authorities to waive the Wicks Law and use a PLA if it will provide the best work at the lowest possible price. If a PLA is used, all contractors shall participate in apprentice training programs in the trades of work it employs that have been approved by the Department of Labor (DOL) for not less than three years. They shall also have at least one graduate in the last three years and use affirmative efforts to retain minority apprentices. PLA's would be exempt from Wicks, but deemed to be public work subject to prevailing wage enforcement.

- The Commissioner of Labor shall have the power to enforce separate specification requirements on projects, and may issue stop-bid orders against public owners for non-compliance.

- Other new monetary thresholds, and similar sealed bidding for non-Wicks projects, would apply to certain public authorities including municipal housing authorities, NYC Construction Fund, Yonkers Educational Construction Fund, NYC Municipal Water Finance Authority, Buffalo Municipal Water Finance Authority, Westchester County Health Care Association, Nassau County Health Care Corp., Clifton-Fine Health Care Corp., Erie County Medical Center Corp., NYC Solid Waste Management Facilities, and the Dormitory Authority.

- Reduces from 15 to 7 days the period in which contractors must pay subcontractors.

IMPORTANT INFORMATION

Regarding Use of Form PW30R

"Employer Registration for Use of 4 Day / 10 Hour Work Schedule"

To use the '4 Day / 10 Hour Work Schedule':

There MUST be a *Dispensation of Hours (PW30)* in place on the project

AND

You MUST register your intent to work 4 / 10 hour days, by completing the PW30R Form.

REMEMBER...

The '4 Day / 10 Hour Work Schedule' applies ONLY to Job Classifications and Counties listed on the PW30R Form.

(**Please note** : For each Job Classification check the individual wage schedule for specific details regarding their 4/10 hour day posting.)

Instructions for Completing Form PW30R

"Employer Registration for Use of 4 Day / 10 Hour Work Schedule"

Before completing Form PW30R check to be sure ...

- There is a *Dispensation of Hours* in place on the project.
- The 4 Day / 10 Hour Work Schedule applies to the Job Classifications you will be using.
- The 4 Day / 10 Hour Work Schedule applies to the County / Counties where the work will take place.

Instructions (Type or Print legibly):

Contractor Information:

- Enter the Legal Name of the business, FEIN, Street Address, City, State, Zip Code; the Company's Phone and Fax numbers; and the Company's email address (if applicable)
- Enter the Name of a Contact Person for the Company along with their Phone and Fax numbers, and the personal email address (if applicable)

Project Information:

- Enter the Prevailing Rate Case number (PRC#) assigned to this project
- Enter the Project Name / Type (i.e. Smithtown CSD – Replacement of HS Roof)
- Enter the Exact Location of Project (i.e. Smithtown HS, 143 County Route #2, Smithtown,NY; Bldgs. 1 & 2)
- If you are a Subcontractor, enter the name of the Prime Contractor for which you work
- On the Checklist of Job Classifications -
  - Go to pages 2 and 3 of the form
  - Place a checkmark in the box to the right of the Job Classification you are choosing
  - Mark all Job Classifications that apply

Requestor Information:

- Enter the name of the person submitting the registration, their title with the company , and the date the registration is filled out

Return Completed Form:

- **Mail** the completed PW30R form (3 pages) to: NYSDOL Bureau of Public Work, SOBC – Bldg.12 – Rm.130, Albany, NY 12240 ***-OR-***
- **Fax** the completed PW30R form (3 pages) to: NYSDOL Bureau of Public Work at (518)485-1870

New York State Department of Labor
Bureau of Public Work
W. Averell Harriman State Office Campus
Building 12 - Room 130
Albany, New York 12240
Phone - (518) 457-5589 Fax - (518) 485-1870

Employer Registration for Use of 4 Day / 10 Hour Work Schedule

Before completing Form PW30R check to be sure ...
There is a *Dispensation of Hours* in place on the project.
The 4 Day / 10 Hour Work Schedule applies to the Job Classifications you will be using.
The 4 Day / 10 Hour Work Schedule applies to the County / Counties where the work will take place.

Please Type or Print the Requested Information

When completed ...
Mail to NYSDOL Bureau of Public Work, SOBC, Bldg. 12, Rm.130, Albany, NY 12240
-or-
Fax to NYSDOL Bureau of Public Work at (518) 485-1870

Contractor Information

Company Name: _____ FEIN: _____

Address: _____

City: _____ State: _____ Zip Code: _____

Phone Number _____ Fax Number: _____ Email Address: _____

Contact Person: _____

Phone No: _____ Fax No: _____ Email: _____

Project Information

Project PRC#: _____ Project Name/Type: _____

Exact Location
of Project: _____ County: _____

(If you are Subcontractor)
Prime Contractor Name: _____

Job Classification(s) to Work 4/10 Schedule: *(Choose all that apply on Job Classification Checklist - Pages 2 & 3)*

Requestor Information

Name: _____

Title: _____ Date : _____

Job Classification Checklist

(Place a checkmark by all classifications that will be using the 4/10 schedule)

Job Classification	Tag #	Applicable Counties	Check Box
Electrician	25m	Nassau, Suffolk	☐
Electrician	43	Cayuga, Chenango, Cortland, Herkimer, Madison, Oneida, Onondaga, Oswego, Otsego, Tompkins, Wayne	☐
Electrician	840Teledata	Cayuga, Onondaga, Ontario, Seneca, Wayne, Yates	☐
Electrician	86	Genesee, Livingston, Monroe, Ontario, Orleans, Wayne, Wyoming	☐
Electrician Lineman	1049Line/Gas	Nassau, Suffolk	☐
Electrician Lineman	1249a	Albany, Allegany, Broome, Cattaraugus, Cayuga, Chautauqua, Chemung, Chenango, Clinton, Columbia, Cortland, Delaware, Dutchess, Erie, Essex, Franklin, Fulton, Genesee, Greene, Hamilton, Herkimer, Jefferson, Lewis, Livingston, Madison, Monroe, Montgomery, Niagara, Oneida, Onondaga, Ontario, Orange, Orleans, Oswego, Otsego, Putnam, Rensselaer, Rockland, Saratoga, Schenectady, Schoharie, Schuyler, Seneca, St. Lawrence, Steuben, Sullivan, Tioga, Tompkins, Ulster, Warren, Washington, Wayne, Wyoming, Yates	☐
Elevator Constructor	138	Columbia, Delaware, Dutchess, Greene, Orange, Putnam, Rockland, Sullivan, Ulster, Westchester	☐
Elevator Constructor	14	Allegany, Cattaraugus, Chautauqua, Erie, Genesee, Niagara, Orleans, Wyoming	☐
Elevator Constructor	27	Chemung, Livingston, Monroe, Ontario, Schuyler, Seneca, Steuben, Wayne, Yates	☐
Elevator Constructor	35	Albany, Clinton, Columbia, Essex, Franklin, Fulton, Greene, Hamiliton, Herkimer, Montgomery, Oneida, Otsego, Rensselaer, Saratoga, Schenectady, Schoharie, Warren, Washington	☐
Elevator Constructor	62.1	Broome, Cayuga, Chenango, Cortland, Delaware, Jefferson, Lewis, Madison, Oneida, Onondaga, Oswego, St. Lawrence, Tioga, Tompkins	☐
Glazier	677.1	Jefferson, Lewis, Livingston, Monroe, Ontario, Seneca, St. Lawrence, Wayne, Yates	☐
Insulator - Heat & Frost	30-Syracuse	Broome, Cayuga, Chemung, Chenango, Cortland, Herkimer, Jefferson, Lewis, Madison, Oneida, Onondaga, Oswego, Otsego, Schuyler, Seneca, St. Lawrence, Tioga, Tompkins	☐

Job Classification Checklist

(Place a checkmark by all classifications that will be using the 4/10 schedule)

Job Classification	Tag #	Applicable Counties	Check Box
Laborers - Residential Deconstruction, Demolition	601	Allegany, Broome, Cattaraugus, Cayuga, Chautauqua, Chemung, Chenango, Clinton, Cortland, Delaware, Essex, Franklin, Genesee, Jefferson, Lewis, Livingston, Monroe, Onondaga, Ontario, Orleans, Oswego, Schuyler, Seneca, St. Lawrence, Steuben, Tioga, Tompkins, Warren, Wayne, Wyoming, Yates	☐
Operating Engineer - Heavy& Highway	832H	Allegany, Chemung, Genesee, Livingston, Monroe, Ontario, Schuyler, Steuben, Wayne, Yates	☐
Painter	178 B	Broome, Chenango, Tioga	☐
Painter	178 E	Chemung, Schuyler, Steuben	☐
Painter	178 O	Delaware, Otsego	☐
Painter	31	Cayuga, Herkimer, Lewis, Madison, Oneida, Onondaga, Ontario, Oswego, Seneca	☐
Painter	38.O	Oswego	☐
Painter	4-Buf,Nia, Olean	Allegany, Cattaraugus, Chautauqua, Erie, Genesee, Livingston, Niagara, Orleans, Steuben, Wyoming	☐
Painter	4-Jamestown	Cattaraugus, Chautauqua	☐
Sheetmetal Worker	46	Livingston, Monroe, Ontario, Seneca, Wayne, Yates	☐
Teamster - Heavy&Highway	294h/h	Albany, Columbia, Fulton, Greene, Montgomery, Rensselaer, Saratoga, Schenectady, Schoharie, Warren, Washington	☐
Teamster - Heavy&Highway	317a.hh	Allegany, Cayuga, Cortland, Seneca, Steuben, Tompkins, Wayne, Yates	☐
Teamster - Heavy&Highway	693.H/H	Broome, Chenango, Delaware, Otsego, Tioga	☐

Introduction to the Prevailing Rate Schedule

Information About Prevailing Rate Schedule

This information is provided to assist you in the interpretation of particular requirements for each classification of worker contained in the attached Schedule of Prevailing Rates.

Classification

It is the duty of the Commissioner of Labor to make the proper classification of workers taking into account whether the work is heavy and highway, building, sewer and water, tunnel work, or residential, and to make a determination of wages and supplements to be paid or provided. It is the responsibility of the public work contractor to use the proper rate. If there is a question on the proper classification to be used, please call the district office located nearest the project. District office locations and phone numbers are listed below.

Prevailing Wage Schedules are issued separately for "General Construction Projects" and "Residential Construction Projects" on a county-by-county basis.

General Construction Rates apply to projects such as: Buildings, Heavy & Highway, and Tunnel and Water & Sewer rates.

Residential Construction Rates generally apply to construction, reconstruction, repair, alteration, or demolition of one family, two family, row housing, or rental type units intended for residential use.

Some rates listed in the Residential Construction Rate Schedule have a very limited applicability listed along with the rate. Rates for occupations or locations not shown on the residential schedule must be obtained from the General Construction Rate Schedule. Please contact the local Bureau of Public Work office before using Residential Rate Schedules, to ensure that the project meets the required criteria.

Paid Holidays

Paid Holidays are days for which an eligible employee receives a regular day's pay, but is not required to perform work. If an employee works on a day listed as a paid holiday, this remuneration is in addition to payment of the required prevailing rate for the work actually performed.

Overtime

At a minimum, all work performed on a public work project in excess of eight hours in any one day or more than five days in any workweek is overtime. However, the specific overtime requirements for each trade or occupation on a public work project may differ. Specific overtime requirements for each trade or occupation are contained in the prevailing rate schedules.

Overtime holiday pay is the premium pay that is required for work performed on specified holidays. It is only required where the employee actually performs work on such holidays.

The applicable holidays are listed under HOLIDAYS: OVERTIME. The required rate of pay for these covered holidays can be found in the OVERTIME PAY section listings for each classification.

Supplemental Benefits

Particular attention should be given to the supplemental benefit requirements. Although in most cases the payment or provision of supplements is for each hour worked, some classifications require the payment or provision of supplements for each hour paid (including paid holidays on which no work is performed) and/or may require supplements to be paid or provided at a premium rate for premium hours worked.

Effective Dates

When you review the schedule for a particular occupation, your attention should be directed to the dates above the column of rates. These are the dates for which a given set of rates is effective. The rate listed is valid until the next effective rate change or until the new annual determination which takes effect on July 1 of each year. All contractors and subcontractors are required to pay the current prevailing rates of wages and supplements. If you have any questions please contact the Bureau of Public Work or visit the New York State Department of Labor website (www.labor.state.ny.us) for current wage rate information.

Apprentice Training Ratios

The following are the allowable ratios of registered Apprentices to Journey-workers.

For example, the ratio 1:1,1:3 indicates the allowable initial ratio is one Apprentice to one Journeyworker. The Journeyworker must be in place on the project before an Apprentice is allowed. Then three additional Journeyworkers are needed before a second Apprentice is allowed. The last ratio repeats indefinitely. Therefore, three more Journeyworkers must be present before a third Apprentice can be hired, and so on.

Please call Apprentice Training Central Office at (518) 457-6820 if you have any questions.

Title (Trade)	Ratio
Boilermaker (Construction)	1:1,1:4
Boilermaker (Shop)	1:1,1:3
Carpenter (Bldg.,H&H, Pile Driver/Dockbuilder)	1:1,1:4
Carpenter (Residential)	1:1,1:3
Electrical (Outside) Lineman	1:1,1:2

Electrician (Inside)	1:1,1:3
Elevator/Escalator Construction & Modernizer	1:1,1:2
Glazier	1:1,1:3
Insulation & Asbestos Worker	1:1,1:3
Iron Worker	1:1,1:4
Laborer	1:1,1:3
Mason	1:1,1:4
Millwright	1:1,1:4
Op Engineer	1:1,1:5
Painter	1:1,1:3
Plumber & Steamfitter	1:1,1:3
Roofer	1:1,1:2
Sheet Metal Worker	1:1,1:3
Sprinkler Fitter	1:1,1:2

If you have any questions concerning the attached schedule or would like additional information, please contact the nearest BUREAU of PUBLIC WORK District Office or write to:

New York State Department of Labor
Bureau of Public Work
State Office Campus, Bldg. 12
Albany, NY 12240

District Office Locations:	Telephone #	FAX #
Bureau of Public Work - Albany	518-457-2744	518-485-0240
Bureau of Public Work - Binghamton	607-721-8005	607-721-8004
Bureau of Public Work - Buffalo	716-847-7159	716-847-7650
Bureau of Public Work - Garden City	516-228-3915	516-794-3518
Bureau of Public Work - Newburgh	845-568-5287	845-568-5332
Bureau of Public Work - New York City	212-775-3568	212-775-3579
Bureau of Public Work - Patchogue	631-687-4883	631-687-4904
Bureau of Public Work - Rochester	585-258-4505	585-258-4708
Bureau of Public Work - Syracuse	315-428-4056	315-428-4671
Bureau of Public Work - Utica	315-793-2314	315-793-2514
Bureau of Public Work - White Plains	914-997-9507	914-997-9523
Bureau of Public Work - Central Office	518-457-5589	518-485-1870

Onondaga County General Construction

Asbestos Worker — 05/01/2010

JOB DESCRIPTION Asbestos Worker **DISTRICT** 9

ENTIRE COUNTIES
Allegany, Broome, Cattaraugus, Cayuga, Chautauqua, Chemung, Chenango, Cortland, Erie, Genesee, Herkimer, Jefferson, Lewis, Livingston, Madison, Monroe, Niagara, Oneida, Onondaga, Ontario, Orleans, Oswego, Otsego, Schuyler, Seneca, St. Lawrence, Steuben, Tioga, Tompkins, Wayne, Wyoming, Yates

WAGES
Per hour

	07/01/2009-11/30/2009	12/01/2009-11/30/2010
Asbestos Worker Removal & Abatement Only	$ 17.50	Additional $3.00*

Only for the removal of insulation materials from mechanical systems which are not going to be scrapped.

* increase to be allocated at a later date

SUPPLEMENTAL BENEFITS
Per hour paid

Journeyman $ 7.50

OVERTIME PAY
See (B, E, *Q, **T, V) on OVERTIME PAGE

HOLIDAY
Paid: See (1) on HOLIDAY PAGE
Overtime: See (2, 4, 6, 25) on HOLIDAY PAGE
*Code Q applies to 4, 6, & 25
**Code T applies to 2

9-12a - Removal Only

Boilermaker — 05/01/2010

JOB DESCRIPTION Boilermaker **DISTRICT** 6

ENTIRE COUNTIES
Cayuga, Clinton, Cortland, Franklin, Jefferson, Lewis, Madison, Oneida, Onondaga, Oswego, Seneca, St. Lawrence, Tompkins

WAGES
Per hour: 07/01/2009

Boilermaker $ 27.73

SUPPLEMENTAL BENEFITS
Per hour paid:

Journeyman $ 18.96

*IMPORTANT NOTE(Portion of Supplemental benefits per hour paid at same premium as shown for overtime.)

Journeyman $ 10.00*

OVERTIME PAY
New Work: See (B,E,Q) on OVERTIME PAGE. Time & 1/2 for the 9th & 10th hours Monday thru Saturday, double all addtl. hours
Maintenance: See (B,E,Q) on OVERTIME PAGE.

HOLIDAY
Paid: See (1) on HOLIDAY PAGE
Overtime: See (5, 6, 10, 11, 15) on HOLIDAY PAGE

REGISTERED APPRENTICES
Wages per hour:

(1/2) year terms at the following percentage of Journeyman's wage.

07/01/2009	1st	2nd	3rd	4th	5th	6th	7th	8th

	65%	65%	70%	75%	80%	85%	90%	95%
	$18.02	$18.02	$19.41	$20.79	$22.18	$23.57	$24.95	$26.34

Supplemental Benefits per hour:

Six month terms at the following dollar amounts:

	1st	2nd	3rd	4th	5th	6th	7th	8th
07/01/2009	$15.46	$15.46	$15.96	$16.46	$16.96	$17.46	$17.96	$18.46

*IMPORTANT NOTE (Portion of Supplemental benefits per hour paid at same premium as shown for overtime.)

	1st	2nd	3rd	4th	5th	6th	7th	8th
07/01/2009	$6.50*	$6.50*	$7.00*	$7.50*	$8.00*	$8.50*	$9.00*	$9.50*

6-175

Carpenter - Building — 05/01/2010

JOB DESCRIPTION Carpenter - Building **DISTRICT** 6

ENTIRE COUNTIES
Onondaga

WAGES
Per hour:

	07/01/2009	06/01/2010 Additional
Carpenter (Bldg)	$ 23.18	$ 1.55
Floor/Carpet Layer	23.18	1.55
Acoustical/Dry Wall	23.18	1.55
Piledriver	23.18	1.55
Lather	23.18	1.55
Certified Welder	24.18	1.55
Hazardous Waste	24.68	1.55
Sawyer	23.58	1.55
Diver Wet Day	58.89	1.55
Diver Dry Day/Tender	24.18	1.55

SUPPLEMENTAL BENEFITS
Per hour worked:

Journeyman	$ 13.79

OVERTIME PAY
See (B, E, E2, Q) on OVERTIME PAGE

HOLIDAY
Paid: See (1) on HOLIDAY PAGE
Overtime: See (5, 6) on HOLIDAY PAGE

REGISTERED APPRENTICES
(1) year terms at the following percentage of Journeyman's wage.

1st	2nd	3rd	4th
50%	60%	70%	80%

Supplemental Benefits per hour worked:

Appr 50%	$ 6.91
Appr 60%	10.15
Appr 70%	13.34
Appr 80%	13.34

6-747.2b

Carpenter - Heavy&Highway — 05/01/2010

JOB DESCRIPTION Carpenter - Heavy&Highway **DISTRICT** 6

ENTIRE COUNTIES
Onondaga

WAGES
Per hour:

	07/01/2009
Carpenter/Millwright	$ 26.96
Piledriver	26.96
Certified Welder	28.45
Diver Wet Day	58.89
Diver Dry Day	27.96
Diver Tender	27.96
Hazardous Waste	28.46
Sawyer	27.37

SUPPLEMENTAL BENEFITS
Per hour worked:

Journeyman	$ 13.94

OVERTIME PAY
See (B, E, Q) on OVERTIME PAGE

HOLIDAY
Paid: See (2, 17) on HOLIDAY PAGE
Overtime: See (5, 6) on HOLIDAY PAGE

REGISTERED APPRENTICES
Per hour:

(1) year terms at the following percentage of Journeyman's wage.

1st	2nd	3rd	4th
50%	60%	70%	80%

Supplemental Benefits per hour worked:

Appr 50%	$ 6.91
Appr 60%	10.15
Appr 70%	13.34
Appr 80%	13.34

6-747.2h

Electrician — 05/01/2010

JOB DESCRIPTION Electrician **DISTRICT** 5

ENTIRE COUNTIES
Yates

PARTIAL COUNTIES
Cayuga: All Townships except Genoa, Ira, Sterling, Victory, Locke, Sempronius and Summerhill
Onondaga: Townships of Elbridge and Skaneateles
Ontario: Townships of Canandaigua, Farmington, Geneva, Gorham, Hopewell, Manchester, Phelps and Seneca
Seneca: All Townships expect Covert and Lodi
Wayne: Townships of Arcadia, Galen, Lyons and Savannah

WAGES
Per Hour

	07/01/2009
Audio/ Sound/ TV	
Teledata Mechanic	$ 28.50
Work from 4:30 PM-1:00 AM	32.80*

Work from 12:30 AM-9:00AM 35.65*

* Applies when shift work is mandated either in job specification or by the contracting agency.

** IMPORTANT NOTICE - EFFECTIVE 04/01/2009 **
Four (4), ten (10) hour days may be worked at straight time during a week, Monday thru Thursday. Friday may be used as a make-up day.

NOTE - In order to use the '4 Day/10 Hour Work Schedule,' you must submit an 'Employer Registration for Use of 4 Day/10 Hour Work Schedule,' form PW30R; additionally, there must be a dispensation of hours in place on the project.

SUPPLEMENTAL BENEFITS
Per hour worked:

Journeyman	$ 14.97	Plus 3% of wage

OVERTIME PAY
See (B, E, Q) on OVERTIME PAGE

HOLIDAY
Paid: See (1) on HOLIDAY PAGE
Overtime: See (5, 6) on HOLIDAY PAGE

REGISTERED APPRENTICES
hourly term at the following percentage of journeyman's rate

1st term (0-1000 hrs)	40%	4th term (3501-5000 hrs)	60%
2nd term (1001-2000 hrs)	45%	5th term (5001-6500 hrs)	70%
3rd term (2001-3500 hrs)	50%	6th term (6501-8000 hrs)	80%

Supplemental Benefits per hour worked

Appr. 1st and 2nd	$ 6.85	plus 3% of wage
Appr. All others	$ 14.97	plus 3% of wage

5-840 Teledata

Electrician — 05/01/2010

JOB DESCRIPTION Electrician **DISTRICT** 6

ENTIRE COUNTIES
Cortland, Herkimer, Madison, Oneida, Oswego

PARTIAL COUNTIES
Cayuga: Townships of Ira, Locke, Sempronius, Sterling, Summerhill and Victory.
Chenango: Only the Townships of Columbus, New Berlin and Sherburne.
Onondaga: Entire County except Townships of Elbridge and Skaneateles.
Otsego: Only the Townships of Plainfield, Richfield, Springfield,Cherry Hill, Roseboom, Middlefield, Otsego, Exeter, Edmeston, Burlington, Pittsfield and New Lebanon.
Tompkins: Only the Township of Groton.
Wayne: Only the Townships of Huron, Wolcott, Rose and Butler.

WAGES
Per hour: 07/01/2009

Electrician	$ 30.00
Cable Splicer	30.00
Teladata	30.00

NOTE: (A) THE FOLLOWING RATES WILL APPLY ON ALL CONTRACTING AGENCY MANDATED MULTIPLE SHIFTS OF EIGHT (8) HOURS FOR AT LEAST FIVE (5) DAYS DURATION WHICH MAY BE WORKED. WHEN TWO (2) SHIFTS OR THREE (3) SHIFTS ARE WORKED:

1st shift	7:00 AM to 3:30 PM
2nd shift	3:30 PM to 12:00 Midnight
3rd shift	12:00 Midnight to 8:30 AM

	07/01/2009
1st shift	$ 30.00
2nd shift	34.50
3rd shift	37.50

(B) OCCUPIED CONDITIONS: WHEN NECESSARY TO PERFORM ALTERATION AND/OR RENOVATION WORK AND OWNER MANDATES (DUE TO OCCUPIED CONDITIONS) PREVENT THE WORK FROM BEING PERFORMED DURING "NORMAL" WORKING HOURS (DEFINED AS BETWEEN 7:00 AM AND 5:30 PM MONDAY THROUGH FRIDAY), ALTERNATE HOURS MAY BE WORKED PROVIDED: 1) THE HOURS ARE ESTABLISHED FOR A MINIMUM OF FIVE (5) DAYS DURATION OR THE LENGTH OF THE JOB WHICHEVER IS SHORTER; AND 2) AN ENTIRE WORK SCOPE WITHIN A JOBSITE AREA IS PERFORMED UTILIZING THE VARIED HOURS.IF THESE CONDITIONS ARE SATSFIED, HOURS WORKED MONDAY THROUGH FRIDAY OUTSIDE OF THE "NORMAL" HOURS SHALL BE PAID AT THE APPROPRIATE DAY SHIFT RATE PLUS FIFTEEN PERCENT (15%). HOWEVER, THE FOLLOWING RESTRICTIONS SHALL APPLY:

1) "ALTERNATE" HOURS SHALL CONSIST OF A MINIMUM OF EIGHT CONSECUTIVE HOURS PER DAY
2) HOURS WORKED IN EXCESS OF EIGHT (8) HOURS PER DAY, MONDAY THROUGH FRIDAY, SHALL BE PAID AT A RATE OF ONE AND ONE-HALF TIMES THE APPLICABLE RATE (DAY-SHIFT + 15%)
3) HOURS WORKED ON SATURDAY SHALL BE PAID AT TIME AND ONE-HALF THE APPLICABLE RATE.
4) HOURS WORKED ON A SUNDAY AND HOLIDAYS SHALL BE PAID AT DOUBLE THE STRAIGHT TIME RATE.
5) IF MULTIPLE SHIFTS ARE WORKED ON THE SAME PROJECT, RATES OF PAY SHALL BE DETERMINED BY NOTE "A" ABOVE
6) WORK OF A NEW CONSTRUCTION NATURE MAY NOT BE WORKED UNDER THESE CONDITIONS.

** IMPORTANT NOTICE - EFFECTIVE 04/01/2009 **
Four (4), ten (10) hour days may be worked at straight time during a week, Monday thru Thursday. Friday may be used as a make-up day.

NOTE - In order to use the '4 Day/10 Hour Work Schedule,' you must submit an 'Employer Registration for Use of 4 Day/10 Hour Work Schedule,' form PW30R; additionally, there must be a dispensation of hours in place on the project.

SUPPLEMENTAL BENEFITS
Per hour worked:
Journeyman — $ 15.62 plus *3% of hourly wage paid

OVERTIME PAY
See (B,E*,O) on OVERTIME PAGE
* Double Time after 10 hrs. on Saturday.

HOLIDAY
Paid: See (1) on HOLIDAY PAGE
Overtime: See (5, 6) on HOLIDAY PAGE

REGISTERED APPRENTICES
(at the following percentage of journeyman's wage)

1st Period (0-1000 hrs)	40%	4th Period (3501-5000 hrs)	60%
2nd Period (1001-2000 hrs)	45%	5th Period (5001-6500 hrs)	70%
3rd Period (2001-3500 hrs)	50%	6th Period (6501-8000 hrs)	80%

Supplemental Benefits per hour worked:

Apprentices:

1st period	$ 8.59 plus *3% of hourly wage paid	4th period	$14.74 plus *3% of hourly wage paid
2nd period	$8.59 plus *3% of hourly wage paid	5th period	$14.96 plus *3% of hourly wage paid
3rd period	$14.52 plus *3% of hourly wage paid	6th period	$15.18 plus *3% of hourly wage paid

*NOTE: The 3% is based on the hourly wage paid, straight time rate or premium rate.

6-43

Electrician **05/01/2010**

JOB DESCRIPTION Electrician **DISTRICT** 5

ENTIRE COUNTIES
Yates

PARTIAL COUNTIES
Cayuga: All Townships except Genoa, Ira, Sterling, Victory, Locke, Sempronius and Summerhill
Onondaga: Townships of Elbridge and Skaneateles
Ontario: Only the Townships of Canadaigua, Farmington, Geneva, Gorham, Hopewell, Manchester, Phelps and Seneca
Seneca: All townships except Covert and Lodi
Wayne: Only the Townships of Arcadia, Galen, Lyons and Savannah

WAGES

Per hour	07/01/2009
Electrician	$ 28.50
Work from 4:30 PM-1:00 AM	32.80*
Work from 12:30 AM-9:00 AM	35.65*

* Applies when shift work is mandated either in job specification or by the contacting agency.

SUPPLEMENTAL BENEFITS
Per hour worked:

Journeyman	$ 14.97	Plus 3% of wage

OVERTIME PAY
See (B, E, Q) on OVERTIME PAGE

HOLIDAY
Paid: See (1) on HOLIDAY PAGE
Overtime: See (5, 6) on HOLIDAY PAGE

REGISTERED APPRENTICES
hourly term at the following percentage of journeyman's rate

1st term (0-1000 hrs)	40%	4th term (3501-5000 hrs)	60%
2nd term (1001-2000 hrs)	45%	5th term (5001-6500 hrs)	70%
3rd term (2001-3500 hrs)	50%	6th term (6501-8000 hrs)	80%

Supplemental Benefits per hour worked

Appr. 1st and 2nd	$ 6.85	plus 3% of wage
Appr. All others	$ 14.97	plus 3% of wage

5-840 Z1

Elevator Constructor **05/01/2010**

JOB DESCRIPTION Elevator Constructor **DISTRICT** 6

ENTIRE COUNTIES
Broome, Cayuga, Chenango, Cortland, Jefferson, Lewis, Onondaga, Oswego, St. Lawrence, Tioga, Tompkins

PARTIAL COUNTIES
Delaware: Only the towns of: Tompkins,Walton,Masonville,Sidney, Franklin and Deposit.
Madison: Only the towns of: Chittenango,Fenner,Cazenovia, Nelson,Eaton,Georgetown,Lenox, Deruyter,Lebenon and Sullivan.
Oneida: Only the towns of: Florence,Camden and Vienna.

WAGES

Per hour:	07/01/2009
Elevator Constructor	$ 36.93

** IMPORTANT NOTICE - EFFECTIVE 04/01/2009 **
Four (4), ten (10) hour days may be worked at straight time during a week, Monday thru Thursday, except work on general repairs and modernization.

NOTE - In order to use the '4 Day/10 Hour Work Schedule,' you must submit an 'Employer Registration for Use of 4 Day/10 Hour Work Schedule,' form PW30R; additionally, there must be a dispensation of hours in place on the project.

SUPPLEMENTAL BENEFITS

Per hour worked:	$ 18.28*
	Plus 6% of wage

*NOTE: The 6% is based on the regular wage paid after 6 months of employment to journeymen and apprentices.

OVERTIME PAY
See (D, O, T) on OVERTIME PAGE

HOLIDAY
Paid: See (5, 6, 15, 16) on HOLIDAY PAGE
Overtime: See (5, 6, 15, 16) on HOLIDAY PAGE

REGISTERED APPRENTICES
Wage per hour:

One year terms at the following percentage of journeyman's wage.

55%	65%	70%	80%
$ 20.31	$ 24.00	$ 25.85	$ 29.54

Supplemental Benefits: Same as journeymen above

6-62.1

Glazier — 05/01/2010

JOB DESCRIPTION Glazier **DISTRICT** 5

ENTIRE COUNTIES
Cayuga, Cortland, Herkimer, Madison, Oneida, Onondaga, Oswego

WAGES

Per Hour:	07/01/2009	05/01/2010 Additional	05/01/2011 Additional
Glazier	$ 21.56	$ 1.25	$ 1.25

Additional $.50 per hour for all swing stagework, belt work, open steel or scaffolding over 25' or more from ground, floor or roof levels.

SUPPLEMENTAL BENEFITS
Per hour worked:

Journeyman $ 11.18

OVERTIME PAY
See (B,E*,E2,Q**) on OVERTIME PAGE.

* Double time before 8:00am and after 6:30pm on Saturday.
**Note: Emergency work on Sunday is 1 1/2 times the hourly rate.

HOLIDAY
Paid: See (1) on HOLIDAY PAGE
Overtime: See (5, 6) on HOLIDAY PAGE

REGISTERED APPRENTICES
1000 hour terms at the following percentage of journeyman's wage.

1st.	2nd.	3rd.	4th.	5th.	6th.	7th.	8th.
50%	55%	60%	65%	70%	75%	80%	90%

Supplemental Benefits per hour worked:

Appr. 1st & 2nd term	$ 8.59
Appr. 3rd term	10.14
Appr. 4th term	10.27
Appr. 5th term	10.40
Appr. 6th term	10.53
Appr. 7th term	10.66
Appr. 8th term	10.92

5-677.Z-2

Insulator - Heat & Frost — 05/01/2010

JOB DESCRIPTION Insulator - Heat & Frost **DISTRICT** 6

ENTIRE COUNTIES
Broome, Cayuga, Chemung, Chenango, Cortland, Herkimer, Jefferson, Lewis, Madison, Oneida, Onondaga, Oswego, Otsego, Schuyler, Seneca, St. Lawrence, Tioga, Tompkins

WAGES

Per hour:	07/01/2009	05/01/2010 Additional
Insulation Installer (On mechanical systems only)	$ 28.15	$ 2.10

NOTE: THE FOLLOWING RATES WILL APPLY ON ALL CONTRACTING AGENCY MANDATED SHIFTS WORKED BETWEEN THE HOURS LISTED BELOW:

	07/01/2009
1ST SHIFT (MORNING) 7-3	$ 28.15
2ND SHIFT (AFTERNOON) 3-11	32.37
3RD SHIFT (NIGHT) 11-7	35.19

** IMPORTANT NOTICE - EFFECTIVE 04/01/2009 **
Four (4), ten (10) hour days may be worked at straight time during a week, Monday thru Thursday. Friday may be used as a make-up day.

NOTE - In order to use the '4 Day/10 Hour Work Schedule,' you must submit an 'Employer Registration for Use of 4 Day/10 Hour Work Schedule,' form PW30R; additionally, there must be a dispensation of hours in place on the project.

SUPPLEMENTAL BENEFITS
Per hour worked:

Journeyman	$ 14.53

OVERTIME PAY
See (B1, Q) on OVERTIME PAGE

HOLIDAY

Paid:	See (1) on HOLIDAY PAGE
Overtime	See (4,6) on HOLIDAY PAGE. Also Easter. Triple time for Labor Day if worked.

REGISTERED APPRENTICES
(1) yr terms at the following percentage of Journeyman's wage

1st	2nd	3rd	4th
50%	60%	70%	80%
$14.08	$16.89	$19.71	$22.52

Supplemental Benefits per hour worked:

$14.53

6-30-Syracuse

Ironworker — 05/01/2010

JOB DESCRIPTION Ironworker **DISTRICT** 6

ENTIRE COUNTIES
Broome, Cayuga, Cortland, Onondaga, Oswego, Seneca, Tioga, Tompkins

PARTIAL COUNTIES
Chenango: Only the Townships of Lincklaen, Otselic, Pitcher,Pharsalia, German, McDonough, Preston, Norwich, Smithville, Oxford, Guilford, Greene, Coventry, Bainbridge and Afton.
Jefferson: Only the Townships of Alexandria, Theresa, Clayton,Orleans Cape, Vincent, Lyme, Brownville, Pamelia, Leray, Hounsfield, Watertown, Rutland, Adams, Henderson, Rodman, Ellisburg, Lorraine and Worth.
Madison: Only the Townships of Sullivan, Lenox, Lincoln, Fenner,Smithfield, Cazenovia, Nelson, DeRuyter and Georgetown.
Schuyler: Only the Townships of Cayuta, Catherine, Hector and Montour.
Wayne: Only the Townships of Galen, Savannah, Rose, Butler, Huron and Wolcott

WAGES

Per hour:	07/01/2009

Structural/Reinf/Rebar	$ 25.75
Mach Mover & Rigger	25.75
Ornamental & curtain wall/window wall	25.75
Pre-glazed metal framed windows attached to steel or masonry/caulking	25.75
Chain Link Fence/Sec	25.75
Sheeter/Bridge rail	25.75
Pre-Cast erector	25.75
Stone Derrickman	25.75
Pre-Engineered bldg. Erector	25.75

SUPPLEMENTAL BENEFITS
Per hour worked:

Journeymen	$ 18.15

OVERTIME PAY
See (B, E, Q) on OVERTIME PAGE

HOLIDAY
Paid: See (1) on HOLIDAY PAGE
Overtime: See (5, 6) on HOLIDAY PAGE

REGISTERED APPRENTICES
(1) year terms at the following rates.

1st	2nd	3rd	4th
$15.00	$17.00	$19.00	$21.00

Supplemental Benefits per hour worked:

Apprentices:

1st year	$ 8.00
2nd year	13.56
3rd year	14.36
4th year	15.15

6-60

Laborer - Building **05/01/2010**

JOB DESCRIPTION Laborer - Building **DISTRICT** 6

ENTIRE COUNTIES
Onondaga

WAGES
*** If a prime contract is let for site work only, meaning no buildings are involved in their site contract, the heavy/highway rates would be applicable for the laborers classification only.

When a prime contract is let for site work and building excavation is part of that contract, the building rates would be applicable for the laborers classification.

All work outside of the building proper, if not included in the building contract, will fall under the Heavy/Highway rates.

WAGES: (per hour)	07/01/2009
Laborer (Bldg)	$ 20.60
Asbestos, Toxic & Hazardous Waste Work	22.10

SUPPLEMENTAL BENEFITS
Per hour worked:

$ 13.30

OVERTIME PAY
See (B, E, E2*, Q) on OVERTIME PAGE
*Time lost must be in excess of four hours.

HOLIDAY
Paid: See (1) on HOLIDAY PAGE
Overtime: See (5, 6) on HOLIDAY PAGE

REGISTERED APPRENTICES
1000 hr terms at the following percentage of journeyman's wage.

	1st	2nd	3rd	4th	5th
	60%	70%	80%	90%	100%
Hour:	0 to 999	1,000 to 1,999	2,000 to 2,999	3,000 to 3,999	4,000 and Over

Supplemental Benefits per hour worked:

All terms: $ 13.30

6-633 bON

Laborer - Heavy&Highway **05/01/2010**

JOB DESCRIPTION Laborer - Heavy&Highway **DISTRICT** 6

ENTIRE COUNTIES
Onondaga

WAGES
Per hour:

GROUP A: Basic, Drill Helper, Flagman, Outboard and Hand Boats.

GROUP B: Bull Float (where used for strike off only), Chain Saw, Concrete Aggregate Bin, Concrete Bootmen, Gin Buggy, Hand or Machine Vibrator, Jack Hammer, Mason Tender, Mortar Mixer, Pavement Breaker, Handlers of all Steel Mesh, Small Generators for Laborers' Tools, Installation of Bridge Drainage Pipe, Pipe Layers, Vibrator Type Rollers, Tamper, Drill Doctor, Water Pump Operators(1-1/2" & Single Diaphragm), Nozzle Asphalt, Gunite Seeding, and Sand Blasting), Laborers on Chain Link Fence Erection, Rock Splitter and Power Unit, Pusher Type Concrete Saw and all other Gas, Electric, Oil & Air Tool Operators, Wrecking Laborer.

GROUP C: All Rock or Drilling Machine Operators (Except Quarry Master and Similar Type), Acetylene Torch Operators, Asphalt Raker, Tail or Screw Operator on Asphalt Paver, Powderman, Tunnel Work.

GROUP D: Blasters, Form Setters (slab steel forms on highways, roads, streets and airport runways), Stone or Granite Curb Setters.

GROUP E: Hazardous Waste Work.

WAGES: (per hour) 07/01/2009

Heavy/Highway Laborer:

GROUP A	$ 22.46
GROUP B	22.66
GROUP C	22.86
GROUP D	23.06
GROUP E	24.46

NOTE: A SINGLE IRREGULAR WORK SHIFT CAN START ANYTIME FROM 5:00 PM TO 1:00 AM. ALL EMPLOYEES WHO WORK A SINGLE IRREGULAR WORK SHIFT ON GOVERNMENTAL MANDATED WORK SHALL BE PAID AN ADDITIONAL $ 1.75 PER HOUR.

SUPPLEMENTAL BENEFITS
Per hour worked: $ 14.50

OVERTIME PAY
See (B, E, Q) on OVERTIME PAGE

HOLIDAY
Paid: See (5, 6) on HOLIDAY PAGE
Overtime: See (5, 6) on HOLIDAY PAGE

REGISTERED APPRENTICES
(1000 hr) terms at the following percentage of journeyman's Group #A wage.

	1st	2nd	3rd	4th
	60%	70%	80%	90%
Hours:	0-999	1,000-1999	2,000-2999	3,000-3999

Supplemental Benefits per hour worked:

All terms: $ 14.50

6-633 hON

Lineman Electrician **05/01/2010**

JOB DESCRIPTION Lineman Electrician **DISTRICT** 6

ENTIRE COUNTIES
Albany, Allegany, Broome, Cattaraugus, Cayuga, Chautauqua, Chemung, Chenango, Clinton, Columbia, Cortland, Delaware, Dutchess, Erie, Essex, Franklin, Fulton, Genesee, Greene, Hamilton, Herkimer, Jefferson, Lewis, Livingston, Madison, Monroe, Montgomery, Niagara, Oneida, Onondaga, Ontario, Orange, Orleans, Oswego, Otsego, Putnam, Rensselaer, Rockland, Saratoga, Schenectady, Schoharie, Schuyler, Seneca, St. Lawrence, Steuben, Sullivan, Tioga, Tompkins, Ulster, Warren, Washington, Wayne, Wyoming, Yates

WAGES
Per hour:

Includes Teledata Work within Ten feet of High Voltage Transmission Lines

	07/01/2009
Lineman/Tech./Welder	$ 43.13
Cable splicer	43.13
Digging Machine Operator	38.82
Tractor Trailer Driver	36.66
Groundman/Truck Driver	34.50
Mechanic 1st Class	34.50
Flagman	25.88

Additional 1.00 per hr.for entire crew when a helicopter is used.

Above rates applicable on all overhead Transmission line work & Fiber Optic Cable where other construction trades are or have been involved. This applies to transmission line work only, not other construction.

Lineman/Technician/Welder	$ 41.91
Digging Machine Operator	37.72
Tractor Trailer Driver	35.62
Groundman/Truck Driver	33.53
Mech. 1st Class	33.53
Flagman	25.15
Certified WelderPipe Type Cable	44.01
Cable Splicer pipe type cable	46.10

Additional 1.00 per hour for entire crew when a helicopter job.

Above rates apply on Switching Structures, Maintenance projects, Railroad Catenary install/maint, Third rail installation, Bonding of Rails and pipe type cable and installation of Fiber Optic Cable.

Lineman /Techician	$ 40.61
Welder/Cable Splicer	40.61
Digging Machine Operator	36.55
Tractor Trailer Driver	34.52
Groundman/Truck Driver	32.49

Mechanic 1st Class	32.49
Flagman	24.37

Additional 1.00 per.hr.for entire crew when a helicopter is used.

Above rates applicable on all overhead and underground distribution and maintenance work, and all overhead and underground transmission line work and the installation of Fiber Optic Cable where no other construction trades are or have been involved.

Lineman/Technician	$ 40.61
Cable Splicer pipe type cable	44.67
Certified Welder pipe type	42.64
Digging Machine Operato	36.55
Tractor Trailer Driver	34.52
Mechanic 1st Class	32.49
Groundman/Truck Driver	32.49
Flagman	24.37

Additional $ 1.00 per hour for entire crew when a helicopter is used.

Above rates applicable on all electrical sub-stations, switching structures, fiber optic cable and all other work not defined as "Utility outside electrical work"

NOTE: The following rates will apply on all Contracting Agency mandated shifts of at least five (5) days duration worked between the hours listed below:

1st Shift	8:00am to 4:30pm Regular Rate
2nd Shift	4:30pm to 1:00am Regular Rate plus 17.3%
3rd Shift	12:30am to 9:00am Regular Rate plus 31.4%

** IMPORTANT NOTICE - EFFECTIVE 04/01/2009 **
Four (4), ten (10) hour days may be worked at straight time during a week, Monday thru Thursday. Friday may be used as a make-up day.

NOTE - In order to use the '4 Day/10 Hour Work Schedule,' you must submit an 'Employer Registration for Use of 4 Day/10 Hour Work Schedule,' form PW30R; additionally, there must be a dispensation of hours in place on the project.

SUPPLEMENTAL BENEFITS
Per hour worked including holidays listed below:

The following SUPPLEMENTAL benefits apply to all classification categories of CONSTRUCTION, TRANSMISSION and DISTRIBUTION.

$ 13.50
*plus 7% of
hourly wage paid

OVERTIME PAY
See (B, E, Q,) on OVERTIME PAGE. Double time for all emergency work designated by the Dept. of Jurisdiction.

HOLIDAY

Paid	See (5, 6, 8, 13, 25) on HOLIDAY PAGE plus Gov. Election Day.
Overtime	See (5, 6, 8, 13, 25) on HOLIDAY PAGE plus Gov. Election Day.

SUPPLEMENTS for holidays paid at straight time

REGISTERED APPRENTICES
(1000) hr terms at the following percentage of Journeyman's wage.

1st	2nd	3rd	4th	5th	6th	7th
60%	65%	70%	75%	80%	85%	90%

Supplemental Benefits per hour worked:

The following SUPPLEMENTAL benefits apply to all classification categories of CONSTRUCTION, TRANSMISSION and DISTRIBUTION.

$ 13.50
*plus 7% of
hourly wage paid

*NOTE: The 7% is based on the hourly wage paid, straight time rate or premium rate.

6-1249a

JOB DESCRIPTION Lineman Electrician - Teledata **DISTRICT** 6

ENTIRE COUNTIES
Albany, Allegany, Broome, Cattaraugus, Cayuga, Chautauqua, Chemung, Chenango, Clinton, Columbia, Cortland, Delaware, Dutchess, Erie, Essex, Franklin, Fulton, Genesee, Greene, Hamilton, Herkimer, Jefferson, Lewis, Livingston, Madison, Monroe, Montgomery, Niagara, Oneida, Onondaga, Ontario, Orange, Orleans, Oswego, Otsego, Putnam, Rensselaer, Rockland, Saratoga, Schenectady, Schoharie, Schuyler, Seneca, St. Lawrence, Steuben, Sullivan, Tioga, Tompkins, Ulster, Warren, Washington, Wayne, Westchester, Wyoming, Yates

WAGES
Per hour:

FOR WORK OUTSIDE BUILDING PROPERTY LINES.

	07/01/2009
Cable Splicer	$ 24.85
Installer/Repairman	23.60
Teledata Lineman	23.60
Technician/Equip Oper	23.60
Groundman	12.51

NOTE: EXCLUDES Teledata work within ten feet of High Voltage (600 volts and over) transmission lines. For this work please see LINEMAN.

SUPPLEMENTAL BENEFITS
Per hour worked:

$ 4.43
*plus 3% of hourly wage paid

*NOTE: The 3% is based on the hourly wage paid, straight time rate or premium rate.

OVERTIME PAY
See (B, E, Q) on OVERTIME PAGE

HOLIDAY
Paid: See (1) on HOLIDAY PAGE
Overtime: See (5, 6, 16) on HOLIDAY PAGE

6-1249LT - Teledata

Lineman Electrician - Traffic Signal Lighting **05/01/2010**

JOB DESCRIPTION Lineman Electrician - Traffic Signal Lighting **DISTRICT** 6

ENTIRE COUNTIES
Albany, Allegany, Broome, Cattaraugus, Cayuga, Chautauqua, Chemung, Chenango, Clinton, Cortland, Delaware, Erie, Essex, Franklin, Fulton, Genesee, Greene, Hamilton, Herkimer, Jefferson, Lewis, Livingston, Madison, Monroe, Montgomery, Niagara, Oneida, Onondaga, Ontario, Orleans, Oswego, Otsego, Rensselaer, Saratoga, Schenectady, Schoharie, Schuyler, Seneca, St. Lawrence, Steuben, Sullivan, Tioga, Tompkins, Warren, Washington, Wayne, Wyoming, Yates

WAGES
Per hour:

	07/01/2009
Certified Welder	$ 38.93
Lineman/Technician	37.08
Digging Mach	33.37
Tractor trailer driver	31.52
Groundman Truck Driver	29.66
Mechanic 1st Class	29.66
Flagman	22.25

Above rates applicable on all Lighting and Traffic Signal Systems with the installation, testing, operation, maintenance and repair of all traffic control and illumination projects, traffic monitoring systems, road weather information systems and the installation of Fiber Optic Cable.

NOTE: THE FOLLOWING RATES WILL APPLY ON ALL CONTRACTING AGENCY MANDATED SHIFTS OF AT LEAST FIVE (5) DAYS DURATION WORKED BETWEEN THE HOURS LISTED BELOW:

1ST SHIFT	8:00 AM TO 4:30 PM REGULAR RATE
2ND SHIFT	4:30 PM TO 1:00 AM REGULAR RATE PLUS 17.3%
3RD SHIFT	12:30 AM TO 9:00 AM REGULAR RATE PLUS 31.4%

SUPPLEMENTAL BENEFITS
Per hour worked:

$ 13.50
*plus 6.5% of
hourly wage paid

NOTE: Additional $1.00 per hr. for entire crew when a helicopter is used.
*NOTE: The 6.5% is based on the hourly wage paid, straight time rate or premium rate.

OVERTIME PAY
See (B, E, Q) on OVERTIME PAGE
NOTE: DOUBLE TIME FOR ALL EMERGENCY WORK DESIGNATED BY THE DEPT. OF JURISDICTION.

HOLIDAY

Paid	See (5, 6, 8, 13, 25) on HOLIDAY PAGE plus Gov Election Day.
Overtime	See (5, 6, 8, 13, 25) on HOLIDAY PAGE plus Gov Election Day.

REGISTERED APPRENTICES
(1000) hour terms at the following percentage of Journeymans Wage.

1st	2nd	3rd	4th	5th	6th	7th
60%	65%	70%	75%	80%	85%	90%

Supplemental Benefits per hour worked:

$ 13.50
*plus 6.5% of
hourly wage paid

6-1249a-LT

Lineman Electrician - Tree Trimmer — 05/01/2010

JOB DESCRIPTION Lineman Electrician - Tree Trimmer **DISTRICT** 6

ENTIRE COUNTIES
Albany, Allegany, Broome, Cattaraugus, Cayuga, Chautauqua, Chemung, Chenango, Clinton, Columbia, Cortland, Delaware, Dutchess, Erie, Essex, Franklin, Fulton, Genesee, Greene, Hamilton, Herkimer, Jefferson, Lewis, Livingston, Madison, Monroe, Montgomery, Niagara, Oneida, Onondaga, Ontario, Orange, Orleans, Oswego, Otsego, Putnam, Rensselaer, Rockland, Saratoga, Schenectady, Schoharie, Schuyler, Seneca, St. Lawrence, Steuben, Sullivan, Tioga, Tompkins, Ulster, Warren, Washington, Wayne, Wyoming, Yates

WAGES
Per hour:

Applies to line clearance, tree work and right-of-way preparation on all new or existing energized overhead or underground electrical, telephone and CATV lines. This also would include stump removal near underground energized electrical lines, including telephone and CATV lines.

	07/01/2009
Tree trimmer	$ 21.22
Equip Operator	18.72
Mechanic	18.72
Truck Driver	15.82
Ground person	12.99
Flag person	9.25

SUPPLEMENTAL BENEFITS
Per hour worked:

$ 6.22
*plus 3% of
hourly wage paid

Supplements paid at STRAIGHT TIME rate for holidays.

*NOTE: The 3% is based on the hourly wage paid, straight time rate or premium rate.

OVERTIME PAY
See (B, E, Q) on OVERTIME PAGE

HOLIDAY
Paid: See (5, 6, 8, 10, 15, 16) on HOLIDAY PAGE

Overtime: See (5, 6, 8, 10, 15, 16) on HOLIDAY PAGE

6-1249TT

Mason - Building **05/01/2010**

JOB DESCRIPTION Mason - Building **DISTRICT** 1

ENTIRE COUNTIES
Cayuga, Onondaga, Oswego

PARTIAL COUNTIES
Madison: The townships of Sullivan and Cazenovia ONLY

WAGES
Per hour

	07/01/2009
Tile/Terrazzo/Marble	
Setter	$ 23.24
Finisher	20.09

SUPPLEMENTAL BENEFITS
Per hour worked

Journeyman Setter	$ 14.27
Journeyman Finisher	13.82

OVERTIME PAY
See (B, E, Q) on OVERTIME PAGE

HOLIDAY
Paid: See (1) on HOLIDAY PAGE
Overtime: See (5, 6) on HOLIDAY PAGE

REGISTERED APPRENTICES
Wages per hour
Hour terms at the following percentage of journeyman's wage

Setter:	
1st term 500 hours	60%
2nd term 1000 hours	70%
3rd term 1000 hours	80%
4th term 1000 hours	85%
5th term 1000 hours	90%
6th term 1500 hours	95%
Finisher:	
1st term 500 hours	70%
2nd term 1000 hours	80%
3rd term 1000 hours	90%
4th term 1200 hours	95%

Supplemental Benefits per hour worked

Setter:	
1st term	$ 9.99
All others	14.27
Finisher:	
1st term	$ 9.64
All others	13.82

1-2TS.3

Mason - Building **05/01/2010**

JOB DESCRIPTION Mason - Building **DISTRICT** 1

ENTIRE COUNTIES
Onondaga

WAGES
Per hour

07/01/2009

Cement Mason	$ 22.67
Plasterer	22.82
Ext insulation finish systems-plasterer	22.32

Additional $0.50 per hr for Scaffold work, Swing Stage and Rolling Stage
Additional $0.25 per hour for Grinder Operator

SUPPLEMENTAL BENEFITS
Per hour worked

Journeyman $ 14.88

OVERTIME PAY
See (B, E, Q) on OVERTIME PAGE

HOLIDAY
Paid: See (1) on HOLIDAY PAGE
Overtime: See (5, 6) on HOLIDAY PAGE

REGISTERED APPRENTICES
Wages per hour

750 hour terms at the following percentage of journeyman's wage

1st	2nd	3rd	4th	5th	6th	7th	8th
55%	60%	65%	70%	75%	80%	85%	90%

Supplemental Benefits per hour worked

All terms $ 14.88

1-2b-on

Mason - Building — 05/01/2010

JOB DESCRIPTION Mason - Building **DISTRICT** 1

ENTIRE COUNTIES
Cayuga, Onondaga

PARTIAL COUNTIES
Madison: The townships of Sullivan and Cazenovia ONLY

WAGES
Per hour

	07/01/2009	07/01/2010 Additional	07/01/2011 Additional
Bricklayer/Blocker	$ 25.55	$ 1.79	$ 1.84
Fireproofing*	25.55	1.79	1.84
Stone Mason	25.55	1.79	1.84
Pointer/Caulker/Cleaner	25.55	1.79	1.84
Cement Mason/Plaster**	25.55	1.79	1.84

Additional $.25 per hr. for work in restricted radiation area of atomic plant.
Additional $5.00 per day more for employees working on a two-point suspension scaffold (Pointer, Caulker, and Cleaner are excluded).
*Fireproofer on Structural only.
**Refer to Onondaga Mason Building wage sheet 1-2b-on for Cement/Plaster work in Onondaga County

SUPPLEMENTAL BENEFITS
Per hour worked

Journeyman $ 15.76

OVERTIME PAY
See (B, E, *E2, Q) on OVERTIME PAGE
*Provided employee worked minimum of 16 hours, but no more than 32 hours during the present work week.

HOLIDAY
Paid: See (1) on HOLIDAY PAGE
Overtime: See (5, 6) on HOLIDAY PAGE

REGISTERED APPRENTICES
Wages per hour

750 hour terms at the following percentage of journeyman's wage

1st	2nd	3rd	4th	5th	6th	7th	8th
55%	60%	65%	70%	75%	80%	85%	90%

Supplemental Benefits per hour worked

0-500 Hours	$ 10.58
All others	15.76

1-2b.3

Mason - Heavy&Highway **05/01/2010**

JOB DESCRIPTION Mason - Heavy&Highway **DISTRICT** 1

ENTIRE COUNTIES

PARTIAL COUNTIES
Onondaga: This rate only applies to Heavy & Highway Cement Mason or Plaster Work in Onondaga County.

WAGES
Per hour

	07/01/2009	06/01/2010 Additional
Cement Mason	$ 25.07	$ 2.00

SUPPLEMENTAL BENEFITS
Per hour worked

Journeyman	$ 14.88

OVERTIME PAY
See (B, E, O) on OVERTIME PAGE

HOLIDAY
Paid: See (5, 6) on HOLIDAY PAGE
Overtime: See (5, 6) on HOLIDAY PAGE

REGISTERED APPRENTICES
Wages per hour

750 hour terms at the following percentage of journeyman's wage

1st	2nd	3rd	4th	5th	6th	7th	8th
55%	60%	65%	70%	75%	80%	85%	90%

Supplemental Benefits per hour worked

All terms	$ 14.88

1-2h/h on

Mason - Heavy&Highway **05/01/2010**

JOB DESCRIPTION Mason - Heavy&Highway **DISTRICT** 1

ENTIRE COUNTIES
Albany, Cayuga, Clinton, Columbia, Essex, Franklin, Fulton, Greene, Hamilton, Herkimer, Jefferson, Lewis, Madison, Montgomery, Oneida, Oswego, Rensselaer, Saratoga, Schenectady, Schoharie, St. Lawrence, Warren, Washington

PARTIAL COUNTIES
Onondaga: For Heavy & Highway Cement Mason or Plaster Work in Onondaga County, refer to Mason-Heavy&Highway tag 1-2h/h on.

WAGES
Per hour

	07/01/2009	07/01/2010 Additional	07/01/2011 Additional	07/01/2012 Additional
Mason & Bricklayer	$ 27.87	$ 1.75	$ 1.90	$ 2.00

Additional $1.00 per hour for work on any swing scaffold or staging suspended by means of ropes or cables.

SUPPLEMENTAL BENEFITS
Per hour worked

Journeyman $ 15.53

OVERTIME PAY
See (B, E, E2, Q) on OVERTIME PAGE

HOLIDAY
Paid: See (5, 6) on HOLIDAY PAGE
Overtime: See (5, 6) on HOLIDAY PAGE
Note: If a holiday falls on Sunday, the Monday following shall constitute the day of the legal holiday.

REGISTERED APPRENTICES
Wages per hour

750 HR TERMS at the following percent of Journeyman's wage

1st	2nd	3rd	4th	5th	6th	7th	8th
55%	60%	65%	70%	75%	80%	85%	90%

Supplemental Benefits per hour worked

0-500 Hours	$ 9.08
All others	15.53

1-2hh.1

Millwright — 05/01/2010

JOB DESCRIPTION Millwright **DISTRICT** 6

ENTIRE COUNTIES
Onondaga

WAGES
Per hour:

	07/01/2009	07/01/2010 Additional
Journeyman	$ 23.40	$ 1.55
Welder	24.65	1.55
Hazardous Waste Work	24.65	1.55

SUPPLEMENTAL BENEFITS
Per hour worked:

Journeyman $ 15.96

OVERTIME PAY
See (B, E, E2, Q) on OVERTIME PAGE
***NOTE: Saturday may be used as a make-up day and worked at the straight time rate of pay during a work week when conditions such as weather, power failure, fire or natural disaster prevent the performance of work on a regularly scheduled work day. If a make-up day is utilized, a minimun of eight hours must be scheduled.

HOLIDAY
Paid: See (1) on HOLIDAY PAGE
Overtime: See (5, 6) on HOLIDAY PAGE

REGISTERED APPRENTICES
(1)year terms at the following percentage of Journeyman's wage

1st	2nd	3rd	4th
60%	70%	80%	90%

Supplemental Benefits per hour worked:

Appr 60%	$ 8.80
Appr 70%	13.812
Appr 80%	14.528
Appr 90%	15.244

6-1163 Onondaga

Operating Engineer - Building — 05/01/2010

JOB DESCRIPTION Operating Engineer - Building **DISTRICT** 6

ENTIRE COUNTIES
Cayuga, Cortland, Herkimer, Jefferson, Lewis, Madison, Oneida, Onondaga, Oswego, Seneca, St. Lawrence, Tompkins

WAGES
Per hour:

If a prime contract is let for site work only, meaning no buildings are involved in their site contract, the Heavy/Highway rates would be applicable.

When a prime contract is let for site work and building excavation is part of that contract, the Building rates would be applicable for the Operators classification.

BUILDING:

CLASSIFICATION A
Air Plako
Asphalt & Blacktop Roller
Automated Concrete Spreader
(CMI or Equiv.)
Auto.Fine Grade Machine(CMI)
Backhoe
Barrell Shredder
Belt Placer
Blacktop Spreader(such as
Barber Greene & Blaw Knox)
Blacktop Plant(automated)
Blast or Rotary Drill
(Truck or cat mounted)
BoomTruck
Burning Plant Operator
Cableway
Caisson Auger
Central Mix Plant (automated)
Concrete Pump
Crane
Crusher-Rock
Derrick
Dewatering Press
Diesel Power Unit

Dirt Filter Press Operation Equipment
Dragline
Dredge
Dual Drum Paver
Elevating Grader(self propelled or tow)
Elevator Hoist--Two Cage
Excavator--all purpose
hydraulically operated
Fork Lift (Loed/Lull and other
terraine type)
Front End Loader(4 c.y. and over)
Gradall
Gradall(Power)
Head Tower (Saurman or equal)
Hoist (2 or 3 Drum)
Hydroblaster (Laser Pump)
LCM's Work Boat Operator
Light Plants,Compressors and
Generators
Locomotive
Maintenance Engineer
Maintenance Welder
Mine Hoist
Mucking Machine or Mole

CLASSIFICATION A (CONTINUED)
Overhead Crane-fixed permanent

CLASSIFICATION B
"A" Frame Truck
Back Dumps
Blacktop Plant
(Non-Automatic)
Boring Machine
Bulldozer
Cage-Hoist
Central Mix Plant(Non-automatic)

Compressor,pump,generator or
welding machine(when used in a
battery of not more than five(5)
Concrete Paver
(single drum over 16S)
Core Boring Machine
Drill Riggs-tractor mounted
Elevator--as material hoist
Farm Tractor (with or without
accessories)
Fork Lift over 10 ton
(with or without attachments)
Front End Loader (under 4 c.y.)
Grout Pump
Gunite Machine
High Pressure Boiler(15 lbs & over)
Hoist (one drum)
Hydraulic Breaking Hammer
(Drop Hammer)
Kolman Plant Loader
(screening gravel)
Maintenance Grease Man
Mixer for stabilized base--
self propelled (Seaman Mixer)
Monorail Machine
Parapet Concrete or Pavement Grinder
Parts Man
Post Drive
(truck or tractor mounted)
JPost Hole Digger
(truck or tractor mounted)
Power Sweeper
(Wayne or Similar)
Pump--Crete or Squeeze Crete
Road Widener (front end of
Grader or self propelled)
Roller
Self Contained hydraulic bench drill.
Shell Winder (motorized)

CLASSIFICATION B (CONTINUED)
Skid Steer Bobcat type Loader

Pile Driver
Quarry Master or Equivalent
Refrigeration Equipment (for soil stabilization)
Scraper
Sea Mule
Shovel
Side Boom
Slip Form Paver
Straddle Buggy(Ross Carrier,lumber carrier)
Tractor Drawn Belt Type Loader (Euclid Loader)
Trenching Machine (digging capacity of over 4 ft. depth)
Truck Crane, Operator
Truck or Trailer Mounted Log Chipper (self-feeder)
Tug Operator (Manned,rented equip.excluded)
Tunnel Shovel
Vibro or Sonic Hammer Controls (when not mounted in proximity to Rig Operator)
Snorkel (overhead arms)
Snowblower control man
Tractor (with or without without accessories)
Trenching Machine (digging capacity of 4 ft. or less)
Tugger Hoist
Vacuum Machine (self propelled or mounted)
Vibro Tamp
Well Drill Well Point System (submersible pumps when used in lieu of well-point system)
Winch (motor driven)
Winch Cat
Winch Truck

CLASSIFICATION C
Compressor (Up to 500 c.f.)
Concrete Paver or Mixer (under 16S)
Concrete Pavement Spreaders & Finishers (not automatic)
Conveyor (over 12 ft)
Electric Submersible Pump (4" and over)
Fine Grade Machine (non-auto)
Fireman
Fork Lift ("with or without" attachments) 10 ton and under
Form Tamper
Generator (2500 watts & over)
Hydraulic Pump
Mechanical Heaters--More than two (2) mechanical heaters or any mechanical heater or heaters whose combined output exceeds 640,000 BTU per hour. (manufacturer's rating) plus one self contained heating unit, (i.e.Sundog or Air Heat type, New Holland Hay Dryer type excluded)
Mulching Machine
Oiler
Power Driven Welding Machine - 300 amp.and over (other than all electric). One Welding Machine under 300 amp. will not require an engineer unless in a battery
Power Heaterman (hay dryer)
Pumps - water & trash
Revinus Widener (road widener)
Single Light Plant
Steam Cleaner or Jenny

	07/01/2009	
Building:		
Master Mechanic	$ 28.85	
Asst.Master Mechanic	27.78	
Class A	27.23	
Class B	25.51	
Class C	22.07	
Pile Dr. w/Bm/Ld 100ft+	28.98	
Tower Crane	28.73	Plus boom length premium.
Crane/Derrick w/boom:		
" 150 ft to 199 ft	Add $ 1.75	
" 200 ft to 299 ft	Add $ 2.75	
" 300 ft and over	Add $ 3.75	

NOTE: THE LENGTH PREMIUM IS IN ADDITION TO THE CRANE TONAGE PREMIUM LISTED BELOW.

ALL CRANES FROM 30 TO 64 TON - CLASS A RATE PLUS $ .50

ALL LATTICE BOOM CRANES 65 TON CAPACITY & OVER - CLASS A RATE PLUS $ 1.75
ALL HYDRAULIC CRANES 65 TON TO 79 TON CAPACITY - CLASS A RATE PLUS $ 1.10
ALL HYDRAULIC CRANES 80 TON TO 99 TON CAPACITY - CLASS A RATE PLUS $ 1.25
ALL HYDRAULIC CRANES 100 TON CAPACITY AND OVER - CLASS A RATE PLUS $ 1.75

ADDITIONAL $2.00 per hr. if work requires Level A,B,C of Personal Protective Equipment listed in the Occup. Saf. & Health Guidance Manual for Hazardous Waste Site Activities. Paper dust masks are excluded from coverage in this section.

SUPPLEMENTAL BENEFITS
Per hour worked:

Journeyman $ 18.80

OVERTIME PAY
See (B, E, Q) on OVERTIME PAGE

HOLIDAY
Paid: See (5, 6) on HOLIDAY PAGE
Overtime: See (5, 6) on HOLIDAY PAGE

REGISTERED APPRENTICES
(1000)HOUR TERMS AT THE FOLLOWING PERCENTAGE OF JOURNEYMAN'S CLASS A WAGE.

1st	2nd	3rd	4th
60%	65%	70%	80%
$16.32	17.68	19.04	21.76

Supplemental Benefits per hour worked:

All apprentices: $ 18.80

6-545b.s

Operating Engineer - Heavy&Highway — 05/01/2010

JOB DESCRIPTION Operating Engineer - Heavy&Highway **DISTRICT** 6

ENTIRE COUNTIES
Cayuga, Cortland, Jefferson, Lewis, Madison, Oneida, Onondaga, Oswego, Seneca, St. Lawrence, Tompkins

PARTIAL COUNTIES
Herkimer: That portion of the county that lies west of a line drawn due north and due south through the railroad station in Little Falls, NY

WAGES
Per hour:

CLASS A: Asphalt Paver 100 h.p. and over(fixed screed 10'width and over), Extend a-mat paver, Automated Concrete Spreader, Automatic Fine Grader, Backhoe (except tractor-mounted, Blacktop Plant (automated) Boom Truck*, Blacktop Roller (10,000 lb and over), Caisson Auger, Central Mix Conc. Plant(automated), Hydraulic crane (over 5 ton capacity), Concrete Curb Machine (Self-propelled, Slipform), Crane, Directional Boring/Drilling Machine and Locator, Derricks, Dragline, Dredge, Excavator (all purpose-hydraulic-Gradall or similar), Front End Loader(4c.y.& over), Head Tower (Sauerman or equal), Hoist (two or three drum), Hydrodemolition Equip (self contained), Maint. Eng, Mine Hoist, Mucking Machine or Mole, Overhead Crane(Gantry or Straddle Type), Pavement Profiler (300 h.p. and over), Pile Driver, Power Grader, Road widener, Scraper, Shovel, Side Boom, Slip Form Paver (If a second man is needed, he shall be an Oiler), Trencher (over 75 h.p.), Truck Crane, Truck or Trailer mounted Chipper (self-feed), Tug Operator (craft over 26'), Tunnel Shovel, Vermeer Saw (over 75 h.p.), Welder.

CLASS B: Asphalt paver under 100 h.p.(under 10 ft width), Automated slope paving machine, Backhoe (Tractor-Mounted), Belt loader, Tractor Drawn Belt Type Loader, Blacktop Plant (non-automated), Blacktop Roller (under 10,000 lb), Blast or Rotary Drill (Truck or Tractor Mounted), Boring Machine, Bridge deck finishing machine, Cage Hoist, Central Mix Plant, (Non Automated), All Concrete Batching Plants, Concrete pump, Hydraulic crane (5 tons & under), Compressors (4 or less exceeding 2,000 c.f.m. combined capacity), Concrete Paver over 16S, Belt Placer, Cableway, Core Drill (skid, trk mtd or track), Crusher, Diesel Pwr Unit,Drill rigs (Trk/Tractor mounted), Fork Lift, F.E.Loader(under 4 cy), Hi-Press Boiler(15 lbs & over), Hoist(One Drum), Hydro Axe, Kolman Plant Loader & similar type loaders (if employer requires another man,he shall be Oiler), L.C.M.Work Boat Oper, Locomotive, Lubrication Eng/Greaseman, Mixer (for stabilized base-self propelled), Pavement Profiler(under 300 h.p.), Plant Engineer, Pump crete, Refrigeration Equipment (for soil stabilization),Roller(above sub grade)under 10,000lb, Sea Mule, Skid Steer Bobcat Type Loader, Self-propelled rubbleizer, Stationary central compressed air plant (5000cfm and up), Telehandler, Tractor with Dozer and/or Pusher, Trencher (under 75 h.p.), Tugger Hoist, Vermeer Saw (ride-on)under 75 h.p., Winch and Winch Cat,Log Skidr,Hydra-spiker(ride on), All ride-on Tie Extractors, Tie Handlers, Tie Inserters, Tie spacers and Track Liners, Drill Rig (Self Contained, Self Propelled or Hydr),Material Handling Knuckle Boom Trk 5 ton & over.

CLASS C: Aggregate Plant, A Frame Truck, Ballast Regulator (ride-on), Boiler(used in conjunction with production), Cement & Bin oper, Compressors (4 under 2,000 cfm combined capacity, or 3 or less with more than 1200 cfm but not to exceed 2,000 c.f.m), Compressors (any size but subject to other provisions for compressors-Dust Collectors, Generators, Pumps, Welding Machines, Concr Paver or Mixer(16s & under), Conc Saw (self propelled), Concrete Pavement Spreaders and Finishers, Conveyor, Drill Locator, Electric Pump Used in Conjunction with Well Point System, Span Saw (Ride on), Farm Tractor with accessories, Form Tamper, Grout Pump, Gunite Machine, Hammers(hydraulic-self propelled), Hydraulic Pump (jacking system), Light plants, Mulching Mach., Oiler, Parapet concrete or pavement grinder, Post Hole Digger & Post Driver, Power Sweeper, Power Heaterman, Roller(grade & fill), Scarifier(ride-on), Shell Winder, Steam cleaner Tamper(ride-on), Submersible Electric Pump (when used in lieu of well point system), Tractor, Material Handling Knuckle Boom Truck (under 5 ton), Vacuum machine (self propelled) Vibratory Compactor, Well point.

SINGLE IRREGULAR WORK SHIFT:

A single irregular work shift can start any time from 5:00 PM to 1:00 AM. All employees who work a single irregular work shift on governmental mandated night work shall be paid an addtl $2.00 per hour. Sect 10 will be effective for work bid on or after July 1, 2001.

	07/01/2009	07/01/2010	07/01/2011
Heavy/Highway:			
Master Mechanic	$ 29.75	$ 31.25	$ 32.35
CLASS A	28.40	29.90	31.00
CLASS B	27.52	29.02	30.12
CLASS C	24.24	25.74	26.84

PIPELINE: Master mechanic, Class A and Class B rates apply.
NOTE: NO CRANE PREMIUM ON PIPELINE WORK

*All cranes and boom trucks, 49 tons and under, or with boom and jib working length under 115 ft. = Class "A" rate and $1.00 per hour.

*All cranes and boom trucks 50 tons and over, or with boom and jib working length of 115 ft. through 149 ft. = Class "A" rate and $2.50 per hour.

*All cranes and boom trucks 50 tons and over, and with boom and jib working length 150 ft.and over = Class "A" rate and $3.50 per hour.

*Tower crane $2.00 per hour.

*Addtl $3.00 per hr for EPA or DEC classified toxic or hazardous waste work and employee is required by regulations to use or wear personal protection.

SUPPLEMENTAL BENEFITS
Per hour worked:

	07/01/2009	07/01/2010	07/01/2011
Journeyman & all Apprentices	$ 21.45	$ 21.95	$ 22.95

OVERTIME PAY
See (B, E, Q) on OVERTIME PAGE

HOLIDAY
Paid: See (5, 6) on HOLIDAY PAGE
Overtime: See (5, 6) on HOLIDAY PAGE

REGISTERED APPRENTICES
(1000) hour terms at the following rate percentage based on "A" rate class

1st	2nd	3rd	4th
60%	65%	70%	75%
$17.04	$18.49	$19.88	$21.30

Supplemental Benefits: see above

6-545h

Operating Engineer - Heavy&Highway - Tunnel **05/01/2010**

JOB DESCRIPTION Operating Engineer - Heavy&Highway - Tunnel **DISTRICT** 5

ENTIRE COUNTIES
Allegany, Cayuga, Chemung, Cortland, Jefferson, Lewis, Livingston, Madison, Monroe, Oneida, Onondaga, Ontario, Oswego, Schuyler, Seneca, St. Lawrence, Steuben, Tompkins, Wayne, Yates

PARTIAL COUNTIES
Genesee: Only that portion of the county that lies east of a linedrawn down the center of Route 98 and the entirety of the City of Batavia.
Herkimer: That portion of the county that lies west of a line drawn due north and due south through the railroad station in Liftle Falls, NY.

WAGES
Crane 1: All cranes, including self erecting to be paid $4.00 per hour over the Class A rate.
Crane 2: All Lattice Boom Cranes and all other cranes with a manufacturer's rating of fifty (50) ton and over to be paid $3.00 per hour over Class A rate.
Crane 3: All hydraulic cranes and derricks with a manufacturer's rating of forty nine (49) ton nad below, including boom trucks, to be paid $2.00 per hour over Class A rate.

MASTER MECHANIC/CHIEF TUNNEL ENG.:

CLASS A: Automatic Concrete Spreader (CMI Type); Automatic Fine Grader; Backhoe (except tractor-mounted,rubber tired); Belt Placer (CMI Type); Blacktop Plant (Automated); Cableway; Caisson Auger; Central Mix Concrete Plant (Automated); Concrete Curb Machine (Self-propelled slipform) Concrete Pump (8" or over); Dredge; Dual Drum Paver; Any Mechanical Shaft Drill; Excavator (all purpose-hydraulic-Gradall or Similar); Fork Lift (factory rated 15 ft and over); Front End Loader (4 c.y & over); Gradall; Head Tower (Sauerman or Equal), Hoist Shaft; Hoist (two or three Drum); Mine Hoist; Maintenance Engineer (Shaft and Tunnel) ; Mine Hoist; Mucking Machine or Mole, Overhead Crane (Gantry or Straddle Type); Pile Driver; Power Grader; Remote Controlled Mole or Tunnel Mach.; Scraper; Shovel; Side Boom; Slip Form Paver (If a second man is needed, he shall be an Oiler); Tractor Drawn Belt Type Loader; Tripper/Maintenance Eng.(Shaft & Tunnel); Truck or Trailer Mounted Log Chipper (self-feeding); Tug Operator (Manned rented equip. excluded); Tunnel Shovel; Mining Machine(Mole and Similar Types).
CLASS B: Automated Central Mix Concrete Plant; Backhoe Trac-Mtd, Rubber Tired); Backhoe (topside); Bitum. Spred. & Mixer, Blacktop Plant non-automated); Blast or Rotary Drill (Truck or Tractor Mounted); Boring Machine; Cage Hoist; Central Mix Plant(NonAutomated) and All Concrete Batching Plants; Compressors (4 or less exceeding 2,000 c.f.m. combined capacity); Concrete Pump; Crusher; Diesel Power Unit; Drill Rigs (Tractor Mounted); Front End Loader (under 4 c.y.); Grayco Epoxy Machine; Hoist (One Drum); Hoist 2 or 3 Drum (Topside); Kolman Plant Loader & Similar Type Loaders (if Employer requires another person to clean the screen or to maintain the equipment, he shall be an Oiler); L.C.M. Work Boat Operator; Locomotive; Maint. Eng. (Topside); Grease Man; Welder; Mixer (for stabilized base-self propelled); Monorail Machine; Plant Eng.; Personnel Hoist; Pump Crete; Ready Mix Concrete Plant; Refrigeration Equipment (for soil stabilization); Road Widener; Roller (all above sub-grade); Sea Mule; Shotcrete Mach.; Shovel (Topside); Tractor with Dozer and/or Pusher; Trencher; Tugger Hoist; Tunnel Locomotive; Winch and Winch Cat.
CLASS C: A Frame Truck; Ballast Regulator (ride-on); Compressors (4 under 2,000 cfm combined capacity; or 3 or less with more than 1200 cfm. but not to exceed 2,000 cfm); Compressors (any size but subject to other provisions for compressors-Dust Collectors, Generators, Pumps, Welding Machines, Light Plants-4 of any type or combination); Concrete Pavement Spreaders and Finishers; Conveyor; Drill core; Drill well; Elec Pump Used in Conjunction with Well Point System; Farm Tractor with Accessories; Fine Grade Machine; ForkLift (under 15 ft); Grout Pump (over (5) cu. ft.; Gunite Machine; Hammers (hydraulic- self propel.); Hydra-Spiker-Ride on; Hydra-Blaster; Hydra Blaster (water); Motorized Form Carrier; Post Hole Digger & Post Driver; Power Sweep; Roller grade & fill); Scarifer (Ride on); Span-Saw (Ride-on); Submersible Electric Pump (when used in lieu of well point system); Tamper (Ride-on); Tie-Extractor, Tie Handler, Tie Inserter, Tie Spacer and Track Liner (Ride-on); Tractor (with towed accessories); Vibratory Compactor; Vibro Tamp, Well Point.
CLASS D: Aggregate Plant; Cement & Bin Operator; Compressors(3 or less not to exceed 1,200 c.f.m. combined capacity); Compressors(any size, but subject to other provisions for compressors-Dust Collectors, Generators, Pumps, Welding Machines, Light Plants-3 or less-any type or combination); Concrete Saw (self propelled); Fireman; Form Tamper; Hydralic Pump (jacking system); Light Plants; Mulching Machine; Oiler; Parapet Concrete or Pavement Grinder; Power Broome towed; Power Heaterman; Revinius Widener; Shell Winder; Steam Cleaner and Tractor; Greaseman; Junior Engineer.

Per hour:	07/01/2009	07/01/2010	07/01/2011
Crane 1	$ 38.03	$ 2.00	$ 2.00
Crane 2	37.03	2.00	2.00
Crane 3	36.03	2.00	2.00
Master Mechanic	36.16	2.00	2.00
CLASS A	34.03	2.00	2.00
CLASS B	32.81	2.00	2.00
CLASS C	30.02	2.00	2.00
CLASS D	27.01	2.00	2.00

SUPPLEMENTAL BENEFITS
Per hour paid:

Journeyman	$ 19.95

OVERTIME PAY
See (B, E, Q) on OVERTIME PAGE

HOLIDAY

Paid: See (5, 6) on HOLIDAY PAGE
Overtime: See (5, 6) on HOLIDAY PAGE

REGISTERED APPRENTICES
(1000) hours terms at the following percentages.

1st term	60% of Class D
2nd term	65% of Class C
3rd term	70% of Class B
4th term	75% of Class A

Supplemental Benefits per hour paid:

$ 19.95

5-832TL.

Operating Engineer - Marine Construction — 05/01/2010

JOB DESCRIPTION Operating Engineer - Marine Construction **DISTRICT** 4

ENTIRE COUNTIES
Albany, Allegany, Bronx, Broome, Cattaraugus, Cayuga, Chautauqua, Chemung, Chenango, Clinton, Columbia, Cortland, Delaware, Dutchess, Erie, Essex, Franklin, Fulton, Genesee, Greene, Hamilton, Herkimer, Jefferson, Kings, Lewis, Livingston, Madison, Monroe, Montgomery, Nassau, New York, Niagara, Oneida, Onondaga, Ontario, Orange, Orleans, Oswego, Otsego, Putnam, Queens, Rensselaer, Richmond, Rockland, Saratoga, Schenectady, Schoharie, Schuyler, Seneca, St. Lawrence, Steuben, Suffolk, Sullivan, Tioga, Tompkins, Ulster, Warren, Washington, Wayne, Westchester, Wyoming, Yates

WAGES
Per Hour:

DREDGING OPERATIONS	07/01/2009
CLASS A Operator, Leverman, Lead Dredgeman	$ 32.89
CLASS A1 Dozer, Front Loader Operator	To Conform to Operating Engineer Prevailing Wage in Locality where Work is being Performed including Benefits.
CLASS B Spider/Spill Barge Operator, Tug Operator(over1000hp), OperatorII, Fill Placer, Derrick Operator, Engineer, Chief Mate, Electrician, Chief Welder, Maintenance Engineer	$ 28.49
Certified Welder, Boat Operator(licensed)	$ 26.84
CLASS C Drag Barge Operator, Steward, Mate, Assistant Fill Placer,	$ 26.14
Welder (please add)	$ 0.06
Boat Operator	$ 25.29
CLASS D Shoreman, Deckhand, Rodman, Scowman, Cook, Messman, Porter/Janitor	$ 21.09
Oiler(please add)	$ 0.09

SUPPLEMENTAL BENEFITS
Per Hour:

THE FOLLOWING SUPPLEMENTAL BENEFITS APPLY TO ALL CATEGORIES

	07/01/2009
All Classes A & B	$ 8.05 plus 7% of straight time wage
(overtime hours add)	$ 0.63
All Class C	$ 7.75 plus 7% of straight time wage
(overtime hours add)	$ 0.48
All Class D	$ 7.45 plus 7% of straight time wage
(overtime hours add)	$ 0.23

OVERTIME PAY
See (B, F, R) on OVERTIME PAGE

HOLIDAY
Paid: See (1) on HOLIDAY PAGE
Overtime: See (5, 6, 8, 15, 26) on HOLIDAY PAGE

4-25a-MarConst

Operating Engineer - Survey Crew — 05/01/2010

JOB DESCRIPTION Operating Engineer - Survey Crew **DISTRICT** 6

ENTIRE COUNTIES
Albany, Allegany, Broome, Cattaraugus, Cayuga, Chautauqua, Chemung, Chenango, Clinton, Columbia, Cortland, Erie, Essex, Franklin, Fulton, Genesee, Greene, Hamilton, Herkimer, Jefferson, Lewis, Livingston, Madison, Monroe, Montgomery, Niagara, Oneida, Onondaga, Ontario, Orleans, Oswego, Otsego, Rensselaer, Saratoga, Schenectady, Schoharie, Schuyler, Seneca, St. Lawrence, Steuben, Tioga, Tompkins, Warren, Washington, Wayne, Wyoming, Yates

PARTIAL COUNTIES
Dutchess: : The Northern portion of the county from the Northern boundry line of the City of Poughkeepsie North.

WAGES
Per hour:

SURVEY CLASSIFICATIONS: Party Chief- One who directs a survey party. Instrumentman- One who runs the instrument and assists the Party Chief. Rodman- One who holds the rods and in general, assists the survey party.

	07/01/2009	04/01/2010	04/01/2011	04/01/2012
Survey Rates:				
Party Chief	$ 30.12	$ 30.87	$ 31.62	$ 32.62
Instrument/Rodperson	27.35	28.10	28.85	29.85

Additional $3.00 per hr. for work in a Tunnel.
Additional $2.50 per hr. for EPA or DEC certified toxic or hazardous waste work

SUPPLEMENTAL BENEFITS
Per hour worked:

Journeyman	$ 18.00	$ 19.25	$ 20.50	$ 21.75

OVERTIME PAY
See (B, E, Q) on OVERTIME PAGE

HOLIDAY
Paid: See (5, 6) on HOLIDAY PAGE
Overtime: See (5, 6) on HOLIDAY PAGE

REGISTERED APPRENTICES
(1 yr. or 1000 hrs.) terms at the following wage rates.

1st year 60%	$ 16.41	$ 16.86	$ 17.31	$ 17.91
2nd year 70%	19.14	19.67	20.19	20.89
3rd year 80%	21.88	22.48	23.08	23.88

Supplemental Benefits	$ 18.00	$ 19.25	$ 20.50	$ 21.75

6-545 D.H.H.

Operating Engineer - Survey Crew - Consulting Engineer — 05/01/2010

JOB DESCRIPTION Operating Engineer - Survey Crew - Consulting Engineer **DISTRICT** 6

ENTIRE COUNTIES
Albany, Allegany, Broome, Cattaraugus, Cayuga, Chautauqua, Chemung, Chenango, Clinton, Columbia, Cortland, Erie, Essex, Franklin, Fulton, Genesee, Greene, Hamilton, Herkimer, Jefferson, Lewis, Livingston, Madison, Monroe, Montgomery, Niagara, Oneida, Onondaga, Ontario, Orleans, Oswego, Otsego, Rensselaer, Saratoga, Schenectady, Schoharie, Schuyler, Seneca, St. Lawrence, Steuben, Tioga, Tompkins, Warren, Washington, Wayne, Wyoming, Yates

PARTIAL COUNTIES
Dutchess: the northern portion of the county from the northern boundry line of the City of Poughkeepsie north.

WAGES
Per hour:

Feasibility and preliminary design surveying, line and grade surveying for inspection or supervision of construction when performed under a Consulting Engineer Agreement.
SURVEY CLASSIFICATIONS: Party Chief- One who directs a survey party.
Instrument Man- One who runs the instrument and assists the Party Chief.
Rodman- One who holds the rods and in general, assists the survey party.

	07/01/2009	06/01/2010	06/01/2011	06/01/2012
Survey Rates:				
Party Chief	$ 30.12	$ 30.87	$ 31.62	$ 32.62
Instrument/Rodperson	27.35	28.10	28.85	29.85

Additional $3.00 per hr. for work in a Tunnel.
Additional $2.50 per hr. for EPA or DEC certified toxic or hazardous waste work

SUPPLEMENTAL BENEFITS
Per hour worked:

$ 18.00	$ 19.25	$ 20.50	$ 21.75

OVERTIME PAY
See (B, E, Q) on OVERTIME PAGE

HOLIDAY
Paid: See (5, 6) on HOLIDAY PAGE
Overtime: See (5, 6) on HOLIDAY PAGE

6-545 DCE

Painter — 05/01/2010

JOB DESCRIPTION Painter **DISTRICT** 3

ENTIRE COUNTIES
Allegany, Broome, Cattaraugus, Cayuga, Chautauqua, Chemung, Chenango, Cortland, Delaware, Erie, Genesee, Herkimer, Jefferson, Lewis, Livingston, Madison, Monroe, Niagara, Oneida, Onondaga, Ontario, Orleans, Oswego, Otsego, Schuyler, Seneca, St. Lawrence, Steuben, Tioga, Tompkins, Wayne, Wyoming, Yates

WAGES

Per hour:	07/01/2009	05/01/2010 Addit.	05/01/2011 Addit.
Bridge*	$ 33.00	$ 2.00	$ 2.00
Tunnel*	33.00	2.00	2.00
Tank*	31.00	2.00	2.00

For Bridge Painting Contracts, ALL WORKERS on and off the bridge (including Flagmen) are to be paid Painter's Rate; the contract must be ONLY for Bridge Painting.

* Note an additional $1.00 per hour is required when the contracting agency or project specification requires any shift to start prior to 6:00am or after 12:00 noon.

SUPPLEMENTAL BENEFITS
Per hour worked:

$ 18.30	$ 18.35	$ 18.40

OVERTIME PAY
Exterior work only See (B, E4*, F, R) on OVERTIME PAGE.
All other work See (B, F, R) on OVERTIME PAGE.

* Note - Saturday is payable at straight time if the employee misses work, except where a doctor's or hospital verification of illness is produced Monday through Friday when work was available to the employee.

HOLIDAY
Paid: See (1) on HOLIDAY PAGE
Overtime: See (5, 6) on HOLIDAY PAGE

REGISTERED APPRENTICES
Wages per hour:

1000 hour terms at the following percentage of Journeyman's wage rate:

1st	2nd	3rd	4th	5th	6th
50%	55%	60%	65%	75%	85%

Supplemental benefits per hour worked:

1st & 2nd terms	$ 1.85
3rd & 4th terms	4.85
5th & 6th terms	5.85

3-4-Bridge, Tunnel, Tank

Painter — 05/01/2010

JOB DESCRIPTION Painter **DISTRICT** 6

ENTIRE COUNTIES
Cayuga, Herkimer, Madison, Oneida, Onondaga, Seneca

PARTIAL COUNTIES
Lewis: Only the Townships of High Market, Lewis, Leyden, Lyondale,Osceola, Turin and West Turin.
Ontario: The City and Township of Geneva.
Oswego: Only the Townships of Amboy, Constantia, Williamstown andOneida Lake.

WAGES
Per hour: 07/01/2009

Brush-Roller/Wallcovering	$ 21.40
Sign painting	21.40
Parking Lot/Hwy Striping	21.40
Lead base paint abatement	21.40
Dry Wall Taper/Finisher	21.90
Spray	21.90
Epoxy (Brush-Roller)	21.90
Epoxy (Spray	21.90
Sandblasting (Oper)	21.90
Boatswain Chair	21.90
Swing Scaffold	21.90
Structural Steel(except bridges,tunnels,tanks)	21.90
Coal Tar epoxy	22.90
Asbestos related work	23.60

NOTE: FOR ANY SHIFT WHICH STARTS PRIOR TO 6:00 AM OR AFTER 12:00 NOON ALL EMPLOYEES WHO WORK A SINGLE IRREGULAR WORK SHIFT ON GOVERNMENTAL MANDATED WORK SHALL BE PAID AN ADDITIONAL $2.00 PER HOUR ABOVE THE APPLICABLE WAGE SCALE.

** IMPORTANT NOTICE - EFFECTIVE 04/01/2009 **
Four (4), ten (10) hour days may be worked at straight time during a week, Monday thru Thursday. Friday may be used as a make-up day.

NOTE - In order to use the '4 Day/10 Hour Work Schedule,' you must submit an 'Employer Registration for Use of 4 Day/10 Hour Work Schedule,' form PW30R; additionally, there must be a dispensation of hours in place on the project.

SUPPLEMENTAL BENEFITS
Per hour worked:

Journeyman	$ 13.03

OVERTIME PAY
See (B, E2, F, R) on OVERTIME PAGE
NOTE: On Nuclear Power Plants - Double time applicable on Sunday if other trades working receive double time.

HOLIDAY
Paid: See (1) on HOLIDAY PAGE
Overtime: See (5, 6) on HOLIDAY PAGE

REGISTERED APPRENTICES
Apprentices - Painter/Decorator: 1000 hour terms at the following percentage of journeyman's Basic wage rate:

1st	2nd	3rd	4th	5th	6th	7th	8th
50%	55%	60%	65%	70%	75%	80%	90%

Apprentices - Taper/Drywall Finisher: 1000 hour terms at the following percentage of journeyman's Taper wage:

1st	2nd	3rd	4th	5th	6th
50%	55%	60%	65%	75%	85%

Supplemental Benefits per hour worked:

Apprentices - Painter/Decorator

Appr	50%,55%	$ 4.91
Appr	60%,65%	4.91
Appr	70%,75%	5.95
Appr	80%,90%	7.11

Apprentices - Taper/Drywall Finisher

Appr	50%,55%	$ 4.91
Appr	60%,65%	4.91
Appr	75%,85%	5.95

6-31

Painter - Metal Polisher — 05/01/2010

JOB DESCRIPTION Painter - Metal Polisher **DISTRICT** 9

ENTIRE COUNTIES
Albany, Allegany, Bronx, Broome, Cattaraugus, Cayuga, Chautauqua, Chemung, Chenango, Clinton, Columbia, Cortland, Delaware, Dutchess, Erie, Essex, Franklin, Fulton, Genesee, Greene, Hamilton, Herkimer, Jefferson, Kings, Lewis, Livingston, Madison, Monroe, Montgomery, Nassau, New York, Niagara, Oneida, Onondaga, Ontario, Orange, Orleans, Oswego, Otsego, Putnam, Queens, Rensselaer, Richmond, Rockland, Saratoga, Schenectady, Schoharie, Schuyler, Seneca, St. Lawrence, Steuben, Suffolk, Sullivan, Tioga, Tompkins, Ulster, Warren, Washington, Wayne, Westchester, Wyoming, Yates

WAGES

	07/01/2009
Metal Polisher	$ 24.85*

*Note: All workers shall be paid an additional premium in an amount equal to twenty (20%) percent of their basic straight time rate of pay for all time worked on hanging scaffolds and on standing scaffolds while working more than 34 feet off the ground. Such premium are to be paid on top of their straight time or overtime, whichever is applicable. This also applies to employees erecting scaffolding.

SUPPLEMENTAL BENEFITS

Per Hour:	07/01/2009
Journeyman:	$ 11.02

OVERTIME PAY
See (B, E, Q, T) on OVERTIME PAGE

HOLIDAY
Paid: See (5, 6, 11, 15, 16, 25, 26) on HOLIDAY PAGE
Overtime: See (5, 6, 9, 11, 15, 16, 25, 26) on HOLIDAY PAGE

REGISTERED APPRENTICES
55% of Basic Polisher Rate

9-8A/28A-MP

Plumber — 05/01/2010

JOB DESCRIPTION Plumber **DISTRICT** 6

ENTIRE COUNTIES
Chemung, Cortland, Onondaga, Schuyler, Tompkins

PARTIAL COUNTIES
Madison: Only the Townships of Sullivan, Cazenovia and De Ruyter.
Seneca: Only the Townships of Covert and Lodi.
Steuben: Only the Townships of Addison, Bath, Bradford, Campbell,Canton, Corning, Erwin, Hornby, Lindley, Pulteney, Rathbone, Thurston, Tuscarora, Urbana and Wayne.
Tioga: Only the Townships of Barton, Berkshire, Candor, Richford,Spencer, Nichols and Tioga.

WAGES

Per hour:	07/01/2009	05/01/2010 Additional	05/01/2011 Additional
Plumber/Steamfitter/Welder/ Pipefitter/HVAC	$ 28.31	$ 2.05	$ 2.20
Refrigeration	28.31	2.05	2.20

*NOTE: THE FOLLOWING RATES WILL APPLY ON ALL CONTRACTING AGENCY MANDATED SHIFTS FOR AT LEAST FIVE (5) DAYS DURATION WORKED BETWEEN THE HOURS LISTED BELOW:

1st Shift	7:30 AM to 4:00 PM	$ 28.31
2nd Shift	4:00 PM to 12:00 Midnight	ABOVE RATE PLUS 15%
3rd Shift	12:00 Midnight to 7:30 AM	ABOVE RATE PLUS 20%

SUPPLEMENTAL BENEFITS
Per hour worked:

Journeyman	$ 17.42

OVERTIME PAY
Time & 1/2 for 9th & 10th hours Monday thru Friday and first 10 hours on Saturday. All other O.T. hours are double-time.

HOLIDAY
Overtime: See (5, 6) on HOLIDAY PAGE

REGISTERED APPRENTICES
(1) year terms at the following percentage of journeyman's wage.

1st	2nd	3rd	4th	5th
50%	55%	60%	70%	85%

Supplemental Benefits per hour worked:

Appr 1st year	$ 7.60
Appr all other years	12.86*

*plus term % of $ 3.76

6-267-SF

Roofer **05/01/2010**

JOB DESCRIPTION Roofer **DISTRICT** 6

ENTIRE COUNTIES
Cayuga, Cortland, Franklin, Herkimer, Jefferson, Lewis, Madison, Oneida, Onondaga, Oswego, Seneca, St. Lawrence

WAGES

Per hour	07/01/2009	06/01/10 Additional
Roofer, Waterproofer	$ 23.50	$ 1.50
Addtl per hr for Pitch removal and application.	.90	
Addtl per hr for asbestos abatement	1.20	

Does not include metal flashing, gravel stop and metal roofing; see Sheetmetal Worker.

NOTE: WHEN MANDATED BY THE OWNER OR AGENCY FOR HOURS WORKED AFTER 5:30 PM AND BEFORE 5:30 AM, THERE WILL BE AN ADDITIONAL $3.75 PER HR PREMIUM.

SUPPLEMENTAL BENEFITS
Per hour worked:

Journeyman	$ 14.57
Additional contribution on any asbestos abatement work.	.75

OVERTIME PAY
See (B, E,*,Q) on OVERTIME PAGE
* Saturday may be paid at straight time if it is the 5th day worked, unless it was a previously scheduled work day. But if a holiday falls in that week and 32 hours were worked, Saturday will be paid at 1 1/2 times the rate.

HOLIDAY
Paid: See (1) on HOLIDAY PAGE
Overtime: See (5, 6) on HOLIDAY PAGE

REGISTERED APPRENTICES
(1000) hour terms at the following percentage of journeyman's wage.

1st TERM 55%	2nd TERM 65%	3rd TERM 75%	4th TERM 85%
1st 999 HRS	1000 to 1999 HRS	2000 to 2999 HRS	3000 to 3999
$12.93	$15.28	$17.63	$19.98

Supplemental Benefits:

Appr 1st and 2nd terms	$ 11.12
Appr 3rd term	13.57
Appr 4th term	14.57
Additional contribution on any asbestos abatement work.	.75

6-195

Sheetmetal Worker — 05/01/2010

JOB DESCRIPTION Sheetmetal Worker — DISTRICT 6

ENTIRE COUNTIES
Cayuga, Chenango, Cortland, Herkimer, Jefferson, Lewis, Madison, Oneida, Onondaga, Oswego, St. Lawrence

WAGES

Per hour:	07/01/2009	05/01/2010 Additional
Sheetmetal Worker:		
*(under $10 million)	$ 25.85	$ 1.25
*(over $10 million)	26.85	1.25

*For total cost of Sheetmetal contract only.

TO INCLUDE METAL STANDING SEAM ROOFING, FLASHING AND GRAVEL STOP.

SUPPLEMENTAL BENEFITS
Per hour worked:

Journeyman	$ 14.78 * Plus 3% of hourly wage paid

* Note: The 3% is based on the hourly wage paid, straight time rate or premium rate.

OVERTIME PAY
See (B, E, *Q) on OVERTIME PAGE

HOLIDAY
Paid: See (1) on HOLIDAY PAGE
Overtime: See (5, 6) on HOLIDAY PAGE

REGISTERED APPRENTICES
(1/2)year terms at the following percentage of journeyman's wage.

1st	2nd	3rd	4th	5th	6th	7th	8th	9th	10th
40%	45%	50%	55%	60%	65%	70%	75%	80%	85%
$10.34	11.63	12.93	14.22	15.51	16.80	18.10	19.39	20.68	21.97

Apprentices: Supplemental benefits

1st	2nd	3rd	4th	5th	6th	7th	8th	9th	10th
$8.39	8.66	8.92	9.19	9.46	9.74	11.03	11.30	11.57	11.84

All apprentices: Plus 3% of hourly wage paid (See note above).

6-58

Sprinkler Fitter **05/01/2010**

JOB DESCRIPTION Sprinkler Fitter **DISTRICT** 1

ENTIRE COUNTIES
Albany, Allegany, Broome, Cattaraugus, Cayuga, Chautauqua, Chemung, Chenango, Clinton, Columbia, Cortland, Delaware, Erie, Essex, Franklin, Fulton, Genesee, Greene, Hamilton, Herkimer, Jefferson, Lewis, Livingston, Madison, Monroe, Montgomery, Niagara, Oneida, Onondaga, Ontario, Orleans, Oswego, Otsego, Rensselaer, Saratoga, Schenectady, Schoharie, Schuyler, Seneca, St. Lawrence, Steuben, Tioga, Tompkins, Warren, Washington, Wayne, Wyoming, Yates

WAGES
Per hour

	07/01/2009	01/01/2010
Sprinkler Fitter	$ 30.15	$ 30.15

SUPPLEMENTAL BENEFITS
Per hour worked

Journeyman	$ 17.80	$ 18.85

OVERTIME PAY
See (B, E, Q) on OVERTIME PAGE

HOLIDAY
Paid: See (1) on HOLIDAY PAGE
Overtime: See (5, 6) on HOLIDAY PAGE
Note: When a holiday falls on Sunday, the following Monday shall be considered a holiday and all work performed on either day shall be at the double time rate. When a holiday falls on Saturday, the preceding Friday shall be considered a holiday and all work performed on either day shall be at the double time rate.

REGISTERED APPRENTICES
Wages per hour

One Half Year terms at the following percentage of Journeyman's wage

1st	2nd	3rd	4th	5th	6th	7th	8th	9th	10th
50%	50%	55%	60%	65%	70%	75%	80%	85%	90%

Supplemental Benefits per hour worked

	07/01/2009	01/01/2010
1st & 2nd terms	$ 7.71	$ 8.41
3rd & 4th terms	$ 12.55	$ 13.35
All others	$ 17.80	$ 18.85

1-669

Teamster - Building **05/01/2010**

JOB DESCRIPTION Teamster - Building **DISTRICT** 6

ENTIRE COUNTIES
Onondaga, Oswego

PARTIAL COUNTIES
Madison: Only the Townships of Cazenovia, De Ruyter, Fenner, Georgetown,Lenox, Nelson and Sullivan.

WAGES
Per hour:

GROUP A: Straight trucks, Mechanic Helper, Parts Chaser.
GROUP B: Tractor trailer, Farm Tractor, Fuel Tank.
GROUP C: Euclid.
GROUP D: Mechanic-on-Site.

	07/01/2009	06/01/2010	06/01/2011
Building:(under $ 5 million)			
GROUP A	$ 19.23	$ 19.63	$ 20.03
GROUP B	19.23	19.63	20.03
GROUP C	19.23	19.63	20.03
GROUP D	19.23	19.63	20.03
Building:(over $ 5 million)			
GROUP A	20.28	20.68	21.08
GROUP B	20.38	20.78	21.18
GROUP C	20.63	21.03	21.43
GROUP D	20.43	20.83	21.23

SUPPLEMENTAL BENEFITS
Per hour worked:

(under $5 Million)	$ 13.71	$ 14.69	$ 15.79
(over $5 Million)	13.87	14.86	15.96

OVERTIME PAY
On Job site See (D,O) on OVERTIME PAGE
Over road See (B,H) on OVERTIME PAGE

HOLIDAY
Paid: See (1) on HOLIDAY PAGE
Overtime: See (5, 6) on HOLIDAY PAGE

6-317

Teamster - Heavy&Highway **05/01/2010**

JOB DESCRIPTION Teamster - Heavy&Highway **DISTRICT** 6

ENTIRE COUNTIES
Onondaga, Oswego

PARTIAL COUNTIES
Madison: Only the Townships of Cazenovia, De Ruyter, Fenner, Georgetown, Lenox, Nelson and Sullivan.

WAGES
Per hour:

GROUP 1: Warehousemen, Yardmen, Truck Helpers, Pickups, Panel Trucks, Flatboy Material Trks(straight jobs), Single Axle Dump Trks, Dumpsters, Material Checkers & Receivers, Greasers, Truck Tiremen, Mechanics Helpers and Parts Chasers. Tandems and Batch Trucks, Mechanics, Dispatcher, Semi-Trailers, Low-boy Trucks, Asphalt Distributor Trucks and Agitator, Mixer Trucks and dumpcrete type vehicles, Truck Mechanic, Fuel Trucks.

GROUP 2:
Specialized Earth Moving Equip, Euclid type, or similar off- highway, where not self-loading, Straddle (Ross) Carrier and self-contained concrete mobile unit, Off-highway Tandem Back-Dump, Twin Engine Equipment and Double-Hitched Equipment where not self-loading.

WAGES per hour:	07/01/2009
Heavy/Highway:	
Group #1	$ 20.69
Group #2	20.89

*For all work bid on or after April 1,1988 there shall be a twelve month carryover of the rates in effect at the time of the bid.

Addtl $ 1.50 per hr on City, County or Federal/State designated hazardous waste site when personal protection is required, by regulation to be used or worn.

SUPPLEMENTAL BENEFITS
Per hour paid: $ 14.78

OVERTIME PAY
See (B, E, Q) on OVERTIME PAGE

HOLIDAY
Paid: See (5, 6) on HOLIDAY PAGE
Overtime: See (5, 6) on HOLIDAY PAGE

6-317h

Welder **05/01/2010**

JOB DESCRIPTION Welder **DISTRICT** 1

ENTIRE COUNTIES
Albany, Allegany, Bronx, Broome, Cattaraugus, Cayuga, Chautauqua, Chemung, Chenango, Clinton, Columbia, Cortland, Delaware, Dutchess, Erie, Essex, Franklin, Fulton, Genesee, Greene, Hamilton, Herkimer, Jefferson, Kings, Lewis, Livingston, Madison, Monroe, Montgomery, Nassau, New York, Niagara, Oneida, Onondaga, Ontario, Orange, Orleans, Oswego, Otsego, Putnam, Queens, Rensselaer, Richmond, Rockland, Saratoga, Schenectady, Schoharie, Schuyler, Seneca, St. Lawrence, Steuben, Suffolk, Sullivan, Tioga, Tompkins, Ulster, Warren, Washington, Wayne, Westchester, Wyoming, Yates

WAGES
Per hour 07/01/2009

Welder (To be paid the same rate of the mechanic performing the work)

OVERTIME PAY

HOLIDAY

1-As Per Trade

Overtime Codes

Following is an explanation of the code(s) listed in the OVERTIME section of each classification contained in the attached schedule. Additional requirements may also be listed in the HOLIDAY section.

(A)	Time and one half of the hourly rate after 7 hours per day
(AA)	Time and one half of the hourly rate after 7 and one half hours per day
(B)	Time and one half of the hourly rate after 8 hours per day
(B1)	Time and one half of the hourly rate for the 9th & 10th hours week days and the 1st 8 hours on Saturday. Double the hourly rate for all additional hours
(B2)	Time and one half of the hourly rate after 40 hours per week
(C)	Double the hourly rate after 7 hours per day
(C1)	Double the hourly rate after 7 and one half hours per day
(D)	Double the hourly rate after 8 hours per day
(D1)	Double the hourly rate after 9 hours per day
(E)	Time and one half of the hourly rate on Saturday
(E1)	Time and one half 1st 4 hours on Saturday Double the hourly rate all additional Saturday hours
(E3)	Between November 1st and March 3rd Saturday may be used as a make-up day at straight time when a day is lost during that week due to inclement weather, provided a given employee has worked between 16 and 32 hours that week
(E2)	Saturday may be used as a make-up day at straight time when a day is lost during that week due to inclement weather
(E4)	Saturday and Sunday may be used as a make-up day at straight time when a day is lost during that week due to inclement weather
(F)	Time and one half of the hourly rate on Saturday and Sunday
(G)	Time and one half of the hourly rate on Saturday and Holidays
(H)	Time and one half of the hourly rate on Saturday, Sunday, and Holidays
(I)	Time and one half of the hourly rate on Sunday
(J)	Time and one half of the hourly rate on Sunday and Holidays
(K)	Time and one half of the hourly rate on Holidays
(L)	Double the hourly rate on Saturday
(M)	Double the hourly rate on Saturday and Sunday
(N)	Double the hourly rate on Saturday and Holidays
(O)	Double the hourly rate on Saturday, Sunday, and Holidays
(P)	Double the hourly rate on Sunday
(Q)	Double the hourly rate on Sunday and Holidays
(R)	Double the hourly rate on Holidays
(S)	Two and one half times the hourly rate for Holidays, if worked
(S1)	Two and one half times the hourly rate the first 8 hours on Sunday or Holidays One and one half times the hourly rate all additional hours.
(T)	Triple the hourly rate for Holidays, if worked

(U) Four times the hourly rate for Holidays, if worked

(V) Including benefits at SAME PREMIUM as shown for overtime

(W) Time and one half for benefits on all overtime hours.

NOTE:BENEFITS are PER HOUR WORKED,for each hour worked, unless otherwise noted

Holiday Codes

PAID Holidays:

Paid Holidays are days for which an eligible employee receives a regular day's pay, but is not required to perform work. If an employee works on a day listed as a paid holiday, this remuneration is in addition to payment of the required prevailing rate for the work actually performed.

OVERTIME Holiday Pay:

Overtime holiday pay is the premium pay that is required for work performed on specified holidays. It is only required where the employee actually performs work on such holidays. The applicable holidays are listed under HOLIDAYS: OVERTIME. The required rate of pay for these covered holidays can be found in the OVERTIME PAY section listings for each classification.

Following is an explanation of the code(s) listed in the HOLIDAY section of each classification contained in the attached schedule. The Holidays as listed below are to be paid at the wage rates at which the employee is normally classified.

(1)	None
(2)	Labor Day
(3)	Memorial Day and Labor Day
(4)	Memorial Day and July 4th
(5)	Memorial Day, July 4th, and Labor Day
(6)	New Year's, Thanksgiving, and Christmas
(7)	Lincoln's Birthday, Washington's Birthday, and Veterans Day
(8)	Good Friday
(9)	Lincoln's Birthday
(10)	Washington's Birthday
(11)	Columbus Day
(12)	Election Day
(13)	Presidential Election Day
(14)	1/2 Day on Presidential Election Day
(15)	Veterans Day
(16)	Day after Thanksgiving
(17)	July 4th
(18)	1/2 Day before Christmas
(19)	1/2 Day before New Years
(20)	Thanksgiving
(21)	New Year's Day
(22)	Christmas
(23)	Day before Christmas
(24)	Day before New Year's
(25)	Presidents' Day
(26)	Martin Luther King, Jr. Day

BUREAU OF PUBLIC WORK
STATE OFFICE BUILDING CAMPUS
ALBANY, NY 12240

REQUEST FOR WAGE AND SUPPLEMENT INFORMATION: REQUIRED BY ARTICLES 8 AND 9 OF THE LABOR LAW

Fax (518) 485-1870 or mail this form for new schedules or for determination for additional occupations.

THIS FORM MUST BE TYPED

SUBMITTED BY: (CHECK ONE) ☐ CONTRACTING AGENCY ☐ ARCHITECT OR ENGINEERING FIRM ☐ PUBLIC WORK DISTRICT OFFICE

DATE :

A. PUBLIC WORK CONTRACT TO BE LET BY: (Enter Data Pertaining to Contracting Agency)

1. Name and complete address (☐ check if new or change) :

Telephone: ( ) Fax: ( )
E-Mail:

2. NY State Units (see Item 5)

☐ 01 DOT
☐ 02 OGS
☐ 03 Dormitory Authority
☐ 04 State University Construction Fund
☐ 05 SUNY/Colleges
☐ 06 Mental Hygiene Facilities Corp.
☐ 07 OTHER N.Y. STATE UNIT
☐ 08 City
☐ 09 Local School District
☐ 10 Special Local District, i.e., Fire, Sewer, Water District
☐ 11 Village
☐ 12 Town
☐ 13 County
☐ 14 Other Non-N.Y. State (Describe)

3. SEND REPLY TO (☐ check if new or change)
Name and complete address:

Telephone: ( ) Fax: ( )
E-Mail:

4. SERVICE REQUIRED. Check appropriate box and provide project information.

☐ New Schedule of Wages and Supplements.

APPROXIMATE BID DATE :

☐ Additional Occupation and/or Redetermination

PRC NUMBER ISSUED PREVIOUSLY FOR THIS PROJECT :

OFFICE USE ONLY

B. PROJECT PARTICULARS

5. Project Title

Description of Work

Contract Identification Number

Note: For NYS units, the OSC Contract No.

6. Location of Project:
Location on Site

Route No/Street Address

Village or City

Town

County

7. Nature of Project - Check One:

☐ 1. New Building
☐ 2. Addition to Existing Structure
☐ 3. Heavy and Highway Construction (New and Repair)
☐ 4. New Sewer or Waterline
☐ 5. Other New Construction (Explain)
☐ 6. Other Reconstruction, Maintenance, Repair or Alteration
☐ 7. Demolition
☐ 8. Building Service Contract

8. OCCUPATION FOR PROJECT :

☐ Construction (Building, Heavy Highway/Sewer/Water)
☐ Tunnel
☐ Residential
☐ Landscape Maintenance
☐ Elevator maintenance
☐ Exterminators, Fumigators
☐ Guards, Watchmen
☐ Janitors, Porters, Cleaners
☐ Moving furniture and equipment
☐ Trash and refuse removal
☐ Window cleaners
☐ Other (Describe)

9. Name and Title of Requester

Signature

OFFICE USE ONLY

Locality Designations :

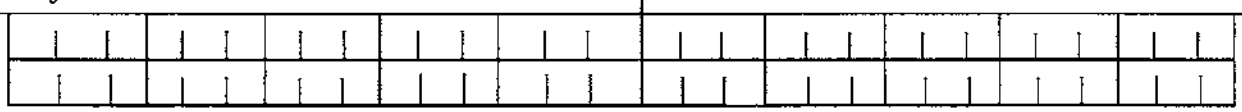

PW-39 (03 - 07)

SEE PAGE TWO FOR LAWS RELATING TO PUBLIC WORK CONTRACTS

NEW YORK STATE DEPARTMENT OF LABOR
Bureau of Public Work - Debarment List

LIST OF EMPLOYERS INELIGIBLE TO BID ON OR BE AWARDED ANY PUBLIC WORK CONTRACT

Under Article 8 and Article 9 of the NYS Labor Law, a contractor, sub-contractor and/or its successor shall be debarred and ineligible to submit a bid on or be awarded any public work or public building service contract/sub-contract with the state, any municipal corporation or public body for a period of five (5) years from the date of debarment when:

- Two (2) final determinations have been rendered within any consecutive six-year (6) period determining that such contractor, sub-contractor and/or its successor has WILLFULLY failed to pay the prevailing wage and/or supplements
- One (1) final determination involves falsification of payroll records or the kickback of wages and/or supplements

NOTE: The agency issuing the determination and providing the information, is denoted under the heading 'Fiscal Officer'. DOL = NYS Dept. of Labor; NYC = New York City Comptroller's Office; AG = NYS Attorney General's Office; DA = County District Attorney's Office.

A list of those barred from bidding, or being awarded, any public work contract or subcontract with the State, under section 141-b of the Workers' Compensation Law, may be obtained at the following link, on the NYS DOL Website:

https://dbr.labor.state.ny.us/EDList/searchPage.do

NYSDOL Bureau of Public Work Debarment List 05/05/2010

Article 8

AGENCY	Fiscal Officer	SSN/FEIN	EMPLOYER NAME	EMPLOYER DBA NAME	ADDRESS	DEBARMENT START DATE	DEBARMENT END DATE
DOL	AG	*****1355	4-A GENERAL CONSTRUCTION CORP.		131 47TH STREET BROOKLYN NY 11232	01/25/2007	01/25/2012
DOL	DOL	*****3983	A & D CONTRACTING CORP.		15 PINE AIRE DRIVE BAY SHORE NY 11706	08/01/2005	08/01/2010
DOL	DOL	*****7478	A & T GENERAL CONSTRUCTION INC.		3 ALAN B SHEPARD PLACE YONKERS NY 10705	12/11/2006	12/11/2011
DOL	NYC	*****5804	AAR CO ELECTRIC INC		5902 AVENUE N BROOKLYN NY 11234	03/20/2009	03/20/2014
DOL	DOL	*****0635	ABOVE ALL PUMP REPAIR CORP		360 KNICKERBOCKER AVENUE BATAVIA NY 11716	10/20/2008	10/20/2013
DOL	NYC	*****8758	ACC CONSTRUCTION CORP.		6 EAST 32ND ST - 7TH FL NEW YORK NY 10016	05/25/2006	05/25/2011
DOL	NYC	*****5022	ACE DRYWALL SYSTEMS INC.		194 ASHLAND PLACE BROOKLYN NY 11217	03/06/2008	03/06/2013
DOL	AG	*****8219	ACTIVE CABLING INC		C/O FRANK DECAPITE 7 SYCAMORE ROAD DRWOODBURY NY 11797	10/02/2008	10/01/2013
DOL	DOL	*****3012	ADAM DECKMAN	DECKMAN PAINTING	154 POND VIEW PARKWAY ROCHESTER NY 14612	04/16/2007	04/16/2012
DOL	DOL	*****5116	ALJAA CONSTRUCTION CORPORATION		3755 SENECA STREET WEST SENECA NY 14403	12/14/2005	12/14/2010
DOL	DOL		ALL TOWNS MECHANICAL	BARRY MORRIS	18 EAST SUNRISE HIGHWAY FREEPORT NY 11758	01/21/2008	01/21/2013
DOL	DOL	*****3101	ALLSTATE CONCRETE CUTTING, INC.		635 MIDLAND AVENUE GARFIELD NJ 07026	07/09/2007	07/09/2012
DOL	DOL	*****8291	AMIR'S VISION INC		230 PRATT STREET BUFFALO NY 14204	09/17/2008	09/17/2013
DOL	AG		AMODIO RUSSO		14 BRAYRON ROAD CARMEL NY 10512	08/01/2005	08/01/2010
DOL	AG		ANASTASIA ANTHOULIS	AKA STACEY GOUZOS	131 47TH STREET BROOKLYN NY 11232	01/25/2007	01/25/2012
DOL	DOL	*****0860	ANDREA STEVENS	STEVENS TRUCKING	2458 EAST RIVER ROAD CORTLAND NY 13045	01/23/2008	01/23/2013
DOL	DOL		ANNE M DIPIZIO		217 STRASMER ROAD DEPEW NY 14043	12/14/2005	12/14/2010
DOL	AG		ANTHONY BRANCA		700 SUMMER STREET STAMFORD CT	11/24/2009	11/24/2014
DOL	DOL		ANTHONY POSELLA		30 GLEN HOLLOW ROCHESTER NY 14622	10/19/2009	10/19/2014
DOL	DOL		ANTHONY T RINALDI		C/O CRAIN CONSTRUCTION CO KINDERHAMACK RDKACKENSACK NY 07061	10/02/2008	10/02/2013
DOL	DOL		ANTHONY TAORMINA		215 MCCORMICK DRIVE BOHEMIA NY 11716	05/20/2009	05/20/2014
DOL	AG	*****7327	ANTHOS CONTRACTING CORP		131 47TH STREET BROOKLYN NY 11232	01/25/2007	01/25/2012
DOL	DOL	*****2725	ARAGONA CONSTRUCTION CORP		5755 NEWHOUSE ROAD EAST AMHERST NY 14051	10/10/2007	10/10/2012
DOL	DOL	*****8688	ARC MECHANICAL CORP		215 MCCORMICK DRIVE BOHEMIA NY 11716	05/20/2009	05/20/2014
DOL	DOL	*****8482	ARGO CONTRACTING CORP		5752 WEST WEBB ROAD YOUNGSTOWN OH 44515	05/21/2008	05/21/2013
DOL	NYC	*****5804	ARIE BAR	C/O AAR CO ELECTRIC INC	5902 AVENUE N BROOKLYN NY 11234	03/20/2009	03/20/2014
DOL	DOL		ARTHUR C OSUORAH		PO BOX 1295 BUFFALO NY 14215	02/15/2008	02/15/2013
DOL	DOL	*****8027	ARTHUR DESIGN ENGINEERS & ASSOCIATES		PO BOX 1295 BUFFALO NY 14215	02/15/2008	02/15/2013
DOL	DOL	*****2993	AST DRYWALL & ACOUSTICS INC		46 JOHN STREET - STE 711 NEW YORK NY 10038	12/16/2008	12/16/2013
DOL	DA	*****5761	AZTEC PLUMBING & HEATING CORP		153 BAYWOODS LANE BAY SHORE NY 11706	03/19/2007	03/19/2012
DOL	DOL	*****7828	BALLAGH GENERAL CONTRACTING INC		250 KNEELAND AVENUE YONKERS NY 10705	07/09/2007	07/09/2012
DOL	NYC		BASIL ROMEO		243-03 137TH AVENUE ROSEDALE NY 11422	03/25/2010	03/25/2015
DOL	DOL		BEATRICE ORTEGA		764 BRADY AVE - APT 631 BRONX NY 10462	05/21/2008	05/21/2013
DOL	DOL		BENNY VIGLIOTTI		C/O LUVIN CONSTRUCTION CO P O BOX 357CARLE PLACE NY 11514	03/15/2010	03/15/2015

Article 8

DOL	DOL		BERNADETTE GORMALLY		250 KNEELAND AVENUE YONKERS NY 10705	07/09/2007	07/09/2012
DOL	NYC		BERNARD COHNEN		193 HARWOOD PLACE PARAMUS NJ 07652	05/14/2008	05/14/2013
DOL	DOL	*****5455	BEST OF FRIENDS OF SCHENECTADY CONSTR CO		425 HAMILTON STREET SCHENECTADY NY 12305	01/24/2006	01/24/2011
DOL	DOL	*****9890	BETTY JOE FRAZIER	NOBLE CONSTRUCTI ON GROUP	23960 WHITE ROAD WATERTOWN NY 13601	02/14/2008	02/14/2013
DOL	DOL		BIAGGIO CANTISANI		200 FERRIS AVENUE WHITE PLAINS NY 10603	12/04/2009	12/04/2014
DOL	DOL	*****0818	BLASTEC INC	MILLER SANDBLASTIN G & PAINTING	121 LINCOLN AVENUE ROCHESTER NY 14611	02/21/2008	02/21/2013
DOL	DOL	*****8501	BLOCKHEAD CONCRETE & PAVING INC		P O BOX 71 CHEEKTOWAGA NY 14225	09/03/2008	09/03/2013
DOL	DOL		BRIAN HOXIE		2219 VALLEY DRIVE SYRACUSE NY 13207	12/04/2009	12/04/2014
DOL	DOL	*****4311	C & F SHEET METAL CORP		201 RICHARDS STREET BROOKLYN NY 11231	02/25/2009	02/24/2014
DOL	DOL	*****0289	C J H INC		22 BLACK HAWK ROAD PINE BUSH NY 12566	06/10/2005	06/10/2010
DOL	DOL	*****9286	CALI BROTHERS INC		1223 PARK STREET PEEKSKILL NY 10566	09/12/2007	09/12/2012
DOL	DOL		CANTISANI & ASSOCIATES LTD		220 FERRIS AVENUE WHITE PLAINS NY 10603	12/04/2009	12/04/2014
DOL	NYC	*****4437	CAPPRY CONTRACTING MGMT. CORP		1081 CONEY ISLAND AVENUE BROOKLYN NY 11230	02/09/2006	02/09/2011
DOL	DOL		CARMODY CONCRETE CORP		220 FERRIS AVENUE WHITE PLAINS NY 10603	12/04/2009	12/04/2014
DOL	DOL		CARMODY ENTERPRISES LTD		220 FERRIS AVENUE WHITE PLAINS NY 10603	12/04/2009	12/04/2014
DOL	DOL		CARMODY INC		220 FERRIS AVENUE WHITE PLAINS NY 10603	12/04/2009	12/04/2014
DOL	DOL		CARMODY MASONRY CORP		220 FERRIS AVENUE WHITE PLAINS NY 10603	12/04/2009	12/04/2014
DOL	DOL		CARMODY"2" INC		220 FERRIS AVENUE WHITE PLAINS NY 10603	12/04/2009	12/04/2014
DOL	DOL	*****9721	CATENARY CONSTRUCTION CORP		112 HUDSON AVENUE ROCHESTER NY 14605	02/14/2006	10/20/2014
DOL	DOL		CHARLES MARANGOUDAKIS		25 WOODHILL LANE MANHASSEST NY 11030	08/16/2005	08/16/2010
DOL	DOL		CHARLES MURDOUGH		203 KELLY DRIVE EAST AURORA NY 14052	03/26/2008	03/26/2013
DOL	DOL	*****1416	CHEROMINO CONTROL GROUP LLC		61 WILLET ST - SUITE 14 PASSAIC NJ 07055	12/03/2009	12/03/2014
DOL	DOL		CHESTER A BEDELL		1233 WALT WHITMAN ROAD MELVILLE NY 11747	04/29/2008	04/29/2013
DOL	DOL		CHRISTINA J HOEK		22 BLACK HAW ROAD PINE BUSH NY 12566	06/10/2005	06/10/2010
DOL	DOL		CHRISTOPHER NICHOLSON		91 NEWMAN PLACE BUFFALO NY 14210	10/19/2006	10/19/2011
DOL	DOL		CITY GENERAL BUILDERS INC		131 MELROSE STREET BROOKLYN NY 11206	03/02/2010	03/02/2015
DOL	DOL	*****7086	CITY GENERAL IRON WORKS INC		131 MELROSE STREET BROOKLYN NY 11206	03/02/2010	03/02/2015
DOL	OOL	*****5329	CNY MECHANICAL ASSOCIATES INC		P O BOX 250 EAST SYRACUSE NY 13057	11/06/2008	11/06/2013
DOL	DOL	*****6866	COMMERCIAL SYSTEM CONSTRUCTION		91 NEWMAN PLACE BUFFALO NY 14210	10/19/2006	10/19/2011
DOL	DOL	*****5740	CORTLAND GLASS COMPANY INC		336 TOMPKINS STREET CORTLAND NY 13045	02/02/2010	02/02/2015
DOL	OOL	*****7794	CRAIN CONSTRUCTION COMPANY INC		ONE KINDERHAMACK ROAD HACKENSACK NJ 07061	10/02/2008	10/02/2013
DOL	DOL		CRAIN CONSTRUCTION OF NEW JERSEY		ONE KINDERHAMACK ROAD HACKENSACK NJ 07061	10/02/2008	10/02/2013
DOL	DOL		CRAIN CONSTRUCTION OF NEW YORK INC		C/O CRAIN CONSTRUCTION CO ONE KINDERHAMACK ROADHACKENSACK NJ 07061	10/02/2008	10/02/2013
DOL	DOL		CRAIN CONTRACTING COMPANY		ONE KINDERHAMACK ROAD HACKENSACK NJ 07061	10/02/2008	10/02/2013
DOL	NYC	*****8777	CROSSLAND ELECTRICAL SYSTEMS INC		846 EAST 52ND STREET BROOKLYN NY 11203	12/19/2008	12/29/2013
DOL	DOL	*****0115	CROW AND SUTTON ASSOCIATES INC		949 GROVESIDE ROAD BUSKIRK NY 12028	08/27/2008	08/27/2013

Article 8

DOL	DOL	*****4266	CRYSTAL INTERIOR CONTRACTING INC		922 CRESCENT STREET BROOKLYN NY 11208	05/21/2008	05/21/2013
DOL	DOL	*****1804	CUSTOM GARDEN LANDSCAPING INC		283 NORTH MIDDLETOWN ROAD PEARL RIVER NY 10965	09/28/2009	09/28/2014
DOL	DOL	*****6339	D J FLOORS INC		9276 VIA CIMATO DRIVE CLARENCE CENTER NY 14032	08/29/2007	08/29/2012
DOL	DOL		D JAMES SUTTON		949 GROVESIDE ROAD BUSKIRK NY 12028	08/27/2008	08/27/2013
DOL	DOL		DARIN ANDERSON		134-25 166 PLACE #5E JAMAICA NY 11434	08/07/2008	08/07/2013
DOL	DOL		DARREN MAYDWELL		115 LEWIS STREET YONKERS NY 10703	05/12/2009	05/12/2014
DOL	DOL		DEANNA J REED		5900 MUD MILL RD-BOX 949 BREWERTON NY 13029	09/02/2008	09/02/2013
DOL	DOL	*****3012	DECKMAN PAINTING		154 POND VIEW PARKWAY ROCHESTER NY 14612	04/16/2007	04/16/2012
DOL	DOL	*****2311	DELCON CONSTRUCTION CORP		220 WHITE PLAINS ROAD TARRYTOWN NY 10591	08/27/2009	08/27/2014
DOL	DOL	*****6971	DELPHI PAINTING AND DECORATING INC		1445 COMMERCE AVENUE BRONX NY 10461	10/09/2007	10/09/2012
DOL	DOL		DESMOND CHARLES		922 CRESCENT STREET BROOKLYN NY 11208	05/21/2008	05/21/2013
DOL	DOL	*****7157	DG PIPELINE INC		312 HALSEYVILLE ROAD ITHACA NY 14850	09/06/2006	09/06/2011
DOL	DOL	*****3218	DIAMOND "D" CONSTRUCTION CORP		5270 TRANSIT ROAD DEPEW NY 14043	12/14/2005	12/14/2010
DOL	DOL		DIMITEIUS KASSIMIS		152-65 11TH AVENUE WHITESTONE NY 11357	05/22/2008	05/22/2013
DOL	DOL	*****3364	DJH MECHANICAL ASSOCIATES LTD		155 KINGSBRIDGE ROAD EAST MOUNT VERNON NY 10552	02/01/2006	02/01/2011
DOL	DOL	*****5881	DON ADAMS ROOFING INC		472 COMMERCE STREET HAWTHORNE NY 10532	12/07/2005	12/07/2010
DOL	DOL		DONALD NOWAK		10 GABY LANE CHEEKTOWAGA NY 14227	10/15/2009	10/15/2014
DOL	DOL		DONALD SCHWENDLER		9276 VIA CIMATO DRIVE CLARENCE CENTER NY 14032	08/29/2007	08/29/2012
DOL	DOL	*****6148	DOT CONSTRUCTION OF NY INC		765 BRADY AVE - APT 631 BRONX NY 10462	05/21/2008	05/21/2013
DOL	DOL		DOUGLAS MCEWEN		121 LINCOLN AVENUE ROCHESTER NY 14611	02/21/2008	02/21/2013
DOL	DOL		DOUGLAS S GRIFFEN		312 HALSEYVILLE ROAD ITHACA NY 14850	09/06/2006	09/06/2011
DOL	DOL		DRAGOLJUB RADOJEVIC	61 WILLET ST - SUITE 14	PASSAIC NJ 07055	12/03/2009	12/03/2014
DOL	DOL		EDWARD SUBEH		1 CHELSEA COURT ATLANTIC CITY NJ 08401	10/06/2008	10/06/2013
DOL	DOL	*****3554	ELITE BUILDING ENTERPRISES INC		34-08 PARKWAY DRIVE BALDWIN NY 11510	07/01/2008	07/21/2013
DOL	AG	*****3233	EMEIS & EMEIS GENERAL CONTRACTING CORP		131 47TH STREET BROOKLYN NY 11232	01/25/2007	01/25/2012
DOL	DOL	*****0780	EMES HEATING & PLUMBING CONTR		5 EMES LANE MONSEY NY 10952	01/20/2002	01/20/3002
DOL	DOL		ERROL L ALLEN		134-25 166 PLACE #5E JAMAICA NY 11434	08/07/2008	08/07/2013
DOL	DOL		ESCO INSTALLERS LLC		1 CHELSEA COURT ATLANTIC CITY NJ 08401	10/06/2008	10/06/2013
DOL	DOL	*****0329	FAULKS PLUMBING HEATING & AIR CONDITIONING INC		3 UPTON STREET HILTON NY 14468	06/10/2008	06/10/2013
DOL	DOL		FERNANDO GOMEZ		201 RICHARDS STREET BROOKLYN NY 11231	02/25/2009	02/25/2014
DOL	DOL	*****0768	FISHER CONCRETE INC		741 WELSH ROAD JAVA CENTER NY 14082	04/08/2009	04/08/2014
DOL	NYC	*****2505	FLORENCE XVI CENTURY MARBLE INC		120 GLEN HEAD ROAD GLEN HEAD NY 11545	08/03/2005	08/03/2010
DOL	DOL	*****7975	FORD CONSTRUCTION INC		18-18 26TH STREET ASTORIA NY 11102	07/18/2005	07/18/2010
DOL	DOL		FORD MASONRY		18-18 26TH STREET ASTORIA NY 11102	07/18/2005	07/18/2010
DOL	DOL	*****0115	FOXCROFT NURSERIES INC		949 GROVESIDE ROAD BUSKIRK NY 12028	08/27/2008	08/27/2013
DOL	DOL		FRANCIS (FRANK) OSCIER		3677 SENECA STREET WEST SENECA NY 14224	09/03/2008	09/03/2013
DOL	NYC		FRANK (FRANCIS) OSCIER		3677 SENECA STREET WEST SENECA NY 14224	09/03/2008	09/03/2013

Article 8

DOL	NYC		FRANK BAKER		24 EDNA DRIVE SYOSSET NY 11791	05/14/2008	05/14/2013
DOL	DOL		FRANK J MERCANDO	C/O MERCANDO CONTRACTIN G CO INC	134 MURRAY AVENUE YONKERS NY 10704	11/22/2008	11/22/2013
DOL	DOL		FRANK J MERCANDO		134 MURRAY AVENUE YONKERS NY 10704	12/11/2009	12/11/2014
DOL	DOL	*****0128	FRANK J TUCEK & SON INC		92 NORTH ROUTE 9W CONGERS NY 10920	01/29/2007	01/29/2012
DOL	DOL		FRANK LOBENE JR		13 CHEVIOT LANE ROCHESTER NY 14624	10/18/2005	10/18/2010
DOL	DOL	*****9832	G A FALCONE CONSTRUCTION INC		253 COMMONWEALTH AVENUE BUFFALO NY 14216	08/07/2007	08/07/2012
DOL	DOL	*****7088	GBA CONTRACTING CORP		4015 21ST AVENUE ASTORIA NY 11105	01/11/2008	01/11/2013
DOL	AG		GEORGE BEGAKIS		57-16 157TH STREET FLUSHING NY 11355	10/04/2006	10/04/2011
DOL	NYC		GEORGE LUCEY		150 KINGS STREET BROOKLYN NY 11231	01/19/1998	01/19/2998
DOL	AG		GERARD IPPOLITO		563 MUNCEY ROAD WEST ISLIP NY 11795	07/14/2008	07/14/2013
DOL	AG		GERASIMO ANDRIANIS		22-15 47TH STREET ASTORIA NY 11105	08/03/2006	08/03/2011
DOL	DOL		GREG SURACI		364 BLEAKER ROAD ROCHESTER NY 14609	10/25/2007	10/25/2012
DOL	DOL		GRIOGORIOS BELLOS		4015 21ST AVENUE ASTORIA NY 11105	01/11/2008	01/11/2013
DOL	DOL	*****9985	GROUND LEVEL CONSTRUCTION		10 GABY LANE CHEEKTOWAGA NY 14227	10/15/2009	10/15/2014
DOL	DOL	*****8904	HALLOCKS CONSTRUCTION CORP	P O BOX 278	YORKTOWN HEIGHTS NY 10598	12/01/2008	12/01/2013
DOL	DOL		HARALAMBOS KARAS		80-12 ASTORIA BOULEVARD EAST ELMHURST NY 11370	11/22/2008	10/22/2013
DOL	DOL	*****0080	HI-AMP ELECTRICAL CONTRACTING CORP		265-12 HILLSIDE AVENUE FLORAL PARK NY 11004	02/15/2008	02/15/2013
DOL	DOL	*****9893	HOXIE'S PAINTING CO INC		2219 VALLEY DRIVE SYRACUSE NY 13207	12/04/2009	12/04/2014
DOL	DOL	*****6429	IDM ENTERPRISES INC		60 OUTWATER LANE GARFIELD NJ 07026	05/09/2009	05/09/2014
DOL	DOL	*****6293	IMPRESSIVE CONCRETE CORP		264A SUBURBAN AVENUE DEER PARK NY 11729	12/18/2007	12/18/2012
DOL	DOL	*****8898	IN-TECH CONSTRUCTION INC		8346 BREWERTON ROAD CICERO NY 13039	07/06/2007	07/06/2012
DOL	NYC	*****7728	INTEGRITY CONSTRUCTION & CONSULTING SERVS		7615 MYRTLE AVENUE GLENDALE NY 11385	02/15/2007	02/15/2012
DOL	DOL	*****0488	INTERWORKS SYSTEMS, INC.		1233 WALT WHITMAN ROAD MELVILLE NY 11747	04/29/2008	04/29/2013
DOL	DOL		ISRAEL MONTESINOS		517 MILES SQUARE ROAD YONKERS NY 10701	02/15/2008	02/15/2013
DOL	DOL		IVAN D MARKOVSKI		60 OUTWATER LANE GARFIELD NJ 07026	05/09/2009	05/09/2014
DOL	DOL		IVAN TORRES		11 PLYMOUTH ROAD DIX HILLS NY 11746	02/15/2008	02/15/2013
DOL	DOL	*****0579	J & I CONSTRUCTION CORP		110 FOURTH STREET NEW ROCHELLE NY 10801	02/15/2008	02/15/2013
DOL	DOL	*****7357	J C MCCASHION CONSTRUCTION INC		84 FREDERICK AVENUE ALBANY NY 12205	04/13/2006	04/13/2011
DOL	DOL	*****1584	J M TRI STATE TRUCKING INC		140 ARMSTRONG AVENUE SYRACUSE NY 13209	10/21/2009	10/21/2014
DOL	AG	*****1562	JANS GENERAL CONSTRUCTION CORP.		131 47TH STREET BROOKLYN NY 11232	01/25/2007	01/25/2012
DOL	DOL		JASON ASBURY		22562 SEA BASS DRIVE BOCA RATON FL 33428	10/10/2007	10/10/2012
DOL	DOL		JAY MEYER		239 MARSH DRIVE DEWITT NY 13214	02/20/2007	02/20/2012
DOL	DOL		JEANETTE CALICCHIA		1223 PARK STREET PEEKSKILL NY 10566	09/12/2007	09/12/2012
DOL	DOL		JEFFREY ARTIERI		107 STEVENS STREET LOCKPORT NY 14094	11/04/2009	11/04/2014
DOL	DOL		JOHN B DUGAN		121 LINCOLN AVENUE ROCHESTER NY 14611	02/21/2008	02/21/2013
DOL	DA		JOHN BIAS		153 BAYWOODS LANE BAY SHORE NY 11706	03/19/2007	03/19/2012

Article 8

DOL	DOL		JOHN BUONADONNA		283 NORTH MIDDLETOWN ROAD PEARL RIVER NY 10965	09/28/2009	09/28/2014
DOL	NYC		JOHN C MCCASHION		84 FREDERICK AVENUE ALBANY NY 12205	04/13/2006	04/13/2011
DOL	NYC		JOHN MARI JR		278 ROBINSON AVENUE NEW YORK NY 10312	04/06/2008	04/06/2013
DOL	NYC		JOHN O'SHEA		4350 BULLARD AVENUE BRONX NY 10466	01/28/2008	01/28/2013
DOL	DOL	*****5970	JOHN PREVETE FRAMING AND JOHN PREVETE FRAMING INC	JOHN PREVETE	320 RIDGE ROAD WEST MILFORD NJ 07480	03/26/2008	03/26/2013
DOL	DOL		JOHN SAN SEVERE		C/O CRAIN CONSTRUCTION CO ONE KINDERHAMACK ROADHACKENSACK NJ 07061	10/02/2008	10/02/2013
DOL	DOL		JOSE DOS SANTOS JR		85-08 60TH AVENUE ELMHURST NY 11373	11/21/2008	11/21/2013
DOL	DOL		JOSEPH CALICCHIA		1223 PARK STREET PEEKSKILL NY 10566	09/12/2007	09/12/2012
DOL	DOL		JOSEPH DIPIZIO		5270 TRANSIT ROAD DEPEW NY 14043	12/14/2005	12/14/2010
DOL	DOL		JOSEPH MONETTE		C/O JOHN MONETTE 140 ARMSTRONG AVENUESYRACUSE NY 13209	10/21/2009	10/21/2014
DOL	DOL	*****1763	JR RESTORATION & ROOFING INC		152-65 11TH AVENUE WHITESTONE NY 11357	05/22/2008	05/22/2013
DOL	DOL		JULIUS AND GITA BEHREND		5 EMES LANE MONSEY NY 10952	11/20/2002	11/20/3002
DOL	DOL	*****9422	JUNKYARD CONSTRUCTION CORP.		2068 ANTHONY AVENUE BRONX NY 10457	12/26/2007	12/26/2012
DOL	DOL	*****3810	K M MARTELL CONSTRUCTION, INC.		57 CROSS ROAD MIDDLETOWN NY 10940	06/25/2007	06/25/2012
DOL	DOL	*****9993	K M R ENTERPRISES		10 STUFFLE STREET CROPSEYVILLE NY 12052	12/20/2006	12/20/2011
DOL	DOL		K NELSON SACKOOR		16 JOY DRIVE NEW HYDE PARK NY 11040	01/05/2010	01/05/2015
DOL	DOL	*****8648	K-STAR CONSTRUCTION CORP		42 48 161ST STREET FLUSHING NY 11358	12/11/2006	12/11/2011
DOL	NYC		KAZIMIERZ KONOPSKI		194 ASHLAND PLACE BROOKLYN NY 11217	03/06/2008	03/06/2013
DOL	AG		KEFCAL CONSTRUCTION, INC.		131 47TH STREET BROOKLYN NY 11232	01/25/2007	01/25/2012
DOL	NYC	*****4923	KELLY'S SHEET METAL, INC.		1426 ATLANTIC AVENUE BROOKLYN NY 11216	12/28/2007	12/28/2012
DOL	DOL		KEMPTON MCINTOSH		8531 AVENUE B BROOKLYN NY 11236	12/16/2008	12/16/2013
DOL	DOL		KENNETH W. GRIFFIN		101 LILL STREET ROCHESTER NY 14621	05/01/2006	05/01/2011
DOL	DOL		KEVIN MARTELL		57 CROSS ROAD MIDDLETOWN NY 10940	06/25/2007	06/25/2012
DOL	AG	*****3318	KOSMAR CONTRACTING CORP.		131 47TH STREET BROOKLYN NY 11232	01/25/2007	01/25/2012
DOL	DOL		KRIS CLARKSON		2484 CATON ROAD CORNING NY 14830	06/20/2007	06/20/2012
DOL	NYC	*****8816	LAKE CONSTRUCTION AND DEVELOPMENT CORPORATION		150 KINGS STREET BROOKLYN NY 11231	08/19/1998	08/19/2998
DOL	DOL	*****9628	LANCET ARCH INC		112 HUDSON AVENUE ROCHESTER NY 14605	02/14/2006	10/19/2014
DOL	DOL		LANCET SPECIALTY CONTRACTING CORP		C/O CATENARY CONSTRUCTION 112 HUDSON AVENUEROCHESTER NY 14605	10/19/2009	10/19/2014
DOL	DOL		LARRY FRANGOS		5752 WEST WEBB ROAD YOUNGSTOWN OH 44515	05/21/2008	05/21/2013
DOL	DOL	*****7907	LEEMA EXCAVATING INC		140 ARMSTRONG AVENUE SYRACUSE NY 13209	10/21/2009	10/21/2014
DOL	DOL	*****0256	LIBERTY PAINTING COMPANY INC		183 LORFIELD DRIVE SNYDER NY 14226	12/08/2005	12/08/2010
DOL	AG	*****5102	LIBERTY TREE SERVICE, INC.		563 MUNCEY ROAD WEST ISLIP NY 11795	07/14/2008	07/14/2013
DOL	DOL	*****6651	LIGHTNING FAST LABOR FORCE SERVICES, INC.		150 NORTH CHESTNUT STREET ROCHESTER NY 14604	05/01/2006	05/01/2011
DOL	DOL	*****4981	LOBENE PAINTING, INC.		13 CHEVIOT LANE ROCHESTER NY 14624	10/18/2005	10/18/2010

Article 8

DOL	AG	*****4654	LOOK UNDER THE CARPET SERVICES INC		P O BOX 686 BUFFALO NY 14290	12/15/2005	12/15/2010
DOL	DOL	*****5953	LPD CONTRACTING INC		1205 MCBRIDE AVENUE WEST PATTERSON NJ 07424	08/27/2007	08/27/2012
DOL	DOL	*****5171	LUVIN CONSTRUCTION CORP		P O BOX 357 CARLE PLACE NY 11514	03/15/2010	03/15/2015
DOL	DOL	*****9875	M & S STRIPING INC		73 INDUSTRIAL PARK BLVD ELMIRA NY 14901	01/10/2007	01/10/2012
DOL	DOL	*****9688	M K PAINTING INC		4157 SEVENTH STREET WYANDOTT MI 48192	05/14/2007	05/14/2012
DOL	AG		MANNS CONTRACTING CORP		131 47TH STREET BROOKLYN NY 11232	01/25/2007	01/25/2012
DOL	NYC		MANUEL P TOBIO		150 KINGS STREET BROOKLYN NY 14444	08/19/1998	08/19/2998
DDL	NYC		MANUEL TOBIO		150 KINGS STREET BROOKLYN NY 11231	08/19/1998	08/19/2998
DOL	DOL	*****4543	MARANGOS CONSTRUCTION CORP		59-45 56TH AVENUE MASPETH NY 11378	08/16/2005	08/16/2010
DOL	DOL		MARK LINDSLEY		355 COUNTY ROUTE 8 FULTON NY 13069	08/08/2009	08/14/2014
DOL	DOL		MASONRY CONSTRUCTION INC		220 FERRIS AVENUE WHITE PLAINS NY 10603	12/04/2009	12/04/2014
DOL	DOL		MASONRY INDUSTRIES INC		220 FERRIS AVENUE WHITE PLAINS NY 10603	12/04/2009	12/04/2014
DOL	DOL		MATTHEW LOBENE		13 CHEVIOT LANE ROCHESTER NY 14624	10/18/2005	10/18/2010
DOL	AG	*****9970	MAY CONSTRUCTION CO INC		700 SUMMER STREET STAMFORD CT	11/24/2009	11/24/2014
DOL	NYC	*****4132	MCCASHION BROTHERS HOLDING COMPANY LLC		84 FREDERICK AVENUE ALBANY NY 12205	04/13/2006	04/13/2011
DOL	DOL		MCS PAINTING CONTRACTORS, INC.		LIME KILN COURT STONY POINT NY 10980	01/25/2006	01/25/2011
DOL	DOL	*****4259	MERCANDO CONTRACTING CO INC		134 MURRAY AVENUE YONKERS NY 10704	12/11/2009	12/11/2014
DOL	DOL	*****0241	MERIT FENCE CO INC		130 OLD ROUTE 6 CARMEL NY 10512	08/06/2003	02/02/2012
DOL	DOL		MICHAEL L. KRIVITZA	NORTHEAST TECHNOLOGIES	105 PINE STREET - APT 2 EAST ROCHESTER NY 14445	05/14/2007	05/14/2012
DOL	DOL		MICHAEL STEVENS	STEVENS TRUCKING	2458 EAST RIVER ROAD CORTLAND NY 13045	01/23/2008	01/23/2013
DOL	DOL	*****0860	MICHAEL STEVENS	STEVENS TRUCKING	2458 EAST RIVER ROAD CORTLAND NY 13045	01/23/2008	01/23/2013
DOL	DOL		MICHAEL TAYLOR		66 RYBKA ROAD STUYVESANT FALLS NY 12174	03/02/2007	03/02/2012
DOL	DOL	*****0818	MILLER SANDBLASTING AND PAINTING		121 LINCOLN AVENUE ROCHESTER NY 14611	02/21/2008	02/21/2013
DOL	DOL	*****4435	MODERN TECH DESIGN & SERVICES INC		9151 SOUTHWESTERN BLVD ANGOLA NY 14006	01/19/2006	01/19/2011
DOL	NYC		MOHAMMAD SELIM		73-12 35TH AVE - APT F63 JACKSON HEIGHTS NY 11372	03/04/2010	03/04/2015
DOL	DOL		MOHAMMED ALI ALVI		22-41 26TH STREET APT. 2ASTORIA NY 11102	07/18/2005	07/18/2010
DOL	DA		MOHAMMED SALEEM		768 LYDIG AVENUE BRONX NY 10462	08/18/2009	08/18/2014
DOL	DOL	*****6616	MUIR CONTRACTORS ASSOCIATES INC		75 ARGYLE AVE - SUITE 2B UNIONDALE NY 11553	08/18/2005	08/18/2010
DOL	DOL	*****2251	MURDOUGH DEVELOPMENT CO., INC.		203 KELLY DRIVE EAST AURORA NY 14052	03/26/2008	03/26/2013
DOL	DA	*****9642	MUTUAL OF AMERICAL GENERAL CONSTRUCTION & MANAGEMENT CORP		768 LYDIG AVENUE BRONX NY 10462	08/18/2009	08/18/2014
DOL	DOL		N F K ENTERPRISES		22 BLACK HAWK ROAD PINE BUSH NY 12566	06/10/2005	06/10/2010
DOL	DOL	*****3310	N F K EXCAVATING AND CONSTRUCTION INC		22 BLACK HAWK ROAD PINE BUSH NY 12566	06/10/2005	06/10/2010
DOL	DOL	*****7371	N F K LANDSCAPING SUPPLY CORP		22 BLACK HAWK ROAD PINE BUSH NY 12566	06/10/2005	06/10/2010
DOL	DOL	*****9445	NASDA ENTERPRISES INC		134-25 166 PLACE #5E JAMAICA NY 11434	08/07/2008	08/07/2013
DOL	DOL	*****2213	NEUSS CONSTRUCTION, INC.		1191 ROUTE 9W - SUITE #C6 MARLBORO NY 12542	09/06/2006	09/06/2011
DOL	DOL		NICK NITIS		3 ALAN B SHEPARD PLACE YONKERS NY 10705	12/11/2006	12/11/2011
DOL	DOL	*****9890	NOBLE CONSTRUCTION		23960 WHITE ROAD WATERTOWN NY 13601	02/14/2008	02/14/2013

Article 8

DOL	DOL	*****7771	NORTHEAST TECHNOLOGIES		105 PINE STREET APT. 2 EAST ROCHESTER NY 14445	05/14/2007	05/14/2012
DOL	DOL	*****1833	NORTHEASTERN SUPREME FLOOR CO.,INC		66 BENEDICT STREET CASTLETON NY 12033	03/02/2007	03/02/2012
DOL	DOL	*****7041	NYCOM SERVICES CORP		80-12 ASTORIA BOULEVARD EAST ELMHURST NY 11370	11/22/2008	11/22/2013
DOL	DOL	*****0797	O GLOBO CONSTRUCTION CORP		85-06 60TH AVENUE ELMHURST NY 11373	11/21/2008	11/21/2013
DOL	AG	*****1641	OLYMPIA MECHANICAL PIPING & HEATING, INC.		3624 12TH AVENUE BROOKLYN NY 11218	08/18/2005	08/18/2010
DOL	DOL	*****1803	OMNI CONTRACTING COMPANY, INC.		3 ALAN B. SHEPARD PLACE YONKERS NY 10705	12/11/2006	12/11/2011
DOL	NYC	*****3855	OT & T INC		36-28 23RD STREET LONG ISLAND CITY NY 11106	01/15/2008	05/14/2013
DOL	AG	*****5133	P&T IRON WORKS		59 PLAIN AVENUE NEW ROCHELLE NY 10801	06/01/2005	06/01/2010
DOL	NYC	*****9833	PARADISE CONSTRUCTION CORP		6814 8TH AVENUE BROOKLYN NY 11220	12/03/2007	12/03/2012
DOL	DOL	*****3039	PARAGON PLATE GLASS, INC.		210 FACTORY STREET WATERTOWN NY 13601	11/07/2006	11/07/2011
DOL	DOL		PATRICK BURNS		19 E. CAYUGA STREET OSWEGO NY 13126	05/15/2008	05/15/2013
DOL	DOL		PATRICK SHAUGHNESSY		88 REDWOOD DRIVE ROCHESTER NY 14617	05/16/2008	05/16/2013
DOL	DOL		PEDRO RINCON		131 MELROSE STREET BROOKLYN NY 11206	03/02/2010	03/02/2015
DOL	DOL		PERRY JACOBS		736 SHERMAN DRIVE BOX 8015UTICA NY 13505	12/04/2005	12/04/2010
DOL	AG		PETER GOUZOS		131 47TH STREET BROOKLYN NY 11232	01/25/2007	01/25/2012
DOL	DOL		PETER J LANDI		249 MAIN STREET EASTCHESTER NY 10709	10/05/2009	10/05/2014
DOL	DOL	*****7229	PETER J LANDI INC		249 MAIN STREET EASTCHESTER NY 10709	10/05/2009	10/05/2014
DOL	DOL	*****5419	PINE VALLEY LANDSCAPE CORP		RR 1, BOX 285-B BUSKIRK NY 12028	08/27/2008	08/27/2013
DOL	DOL		PRECISION DEVELOPMENT CORP		115 LEWIS STREET YONKERS NY 10703	05/12/2009	05/12/2014
DOL	DOL	*****9167	PRECISION SITE WORK, INC.		736 SHERMAN DRIVE BOX 8015UTICA NY 13505	12/04/2005	12/04/2010
DOL	DOL	*****9359	PRECISION STEEL ERECTORS INC		P O BOX 949 BREWERTON NY 13029	09/02/2008	09/02/2013
DOL	DOL	*****2326	PUTMAN CONSTRUCTION COMPANY OF WESTERN NY		29 PHYLLIS AVENUE BUFFALO NY 14215	09/03/2008	09/03/2013
DOL	DOL	*****7438	R & H COMMERCIAL FLOORING, INC.		102 WILLOW AVENUE WATKINS GLEN NY 14891	06/20/2007	06/20/2012
DOL	DOL	*****1596	R & T SUPREME SPORTS FLOORING, LLC		66 RYBKA ROAD STUYVESANT FALLS NY 12174	03/02/2007	03/02/2012
DOL	DA	*****0358	R & W FACILITY CARE SYSTEMS INC		485 ATLANTIC AVENUE BROOKLYN NY 11217	11/22/2005	11/22/2010
DOL	DOL	*****1629	R S CONSTRUCTION COMPANY LLC		571 MILES SQUARE ROAD YONKERS NY 10701	04/04/2007	04/04/2012
DOL	AG	*****2626	RAINBOW RENOVATIONS, INC.		35-44 CRESCENT STREET LONG ISLAND CITY NY 11106	08/03/2006	08/03/2011
DOL	DOL	*****7294	REDWOOD FLOORING, INC.		88 REDWOOD DRIVE ROCHESTER NY 14617	05/16/2008	05/16/2013
DOL	NYC	*****6978	RISINGTECH INC		243-03 137TH AVENUE ROSEDALE NY 11422	03/25/2010	03/25/2015
DOL	DOL		ROBBYE BISSESAR		89-51 SPRINGFIELD BLVD QUEENS VILLAGE NY 11427	01/11/2003	01/11/3003
DOL	DOL		ROBERT DIMARSICO		1233 WALT WHITMAN ROAD MELVILLE NY 11747	04/29/2008	04/29/2013
DOL	DOL		ROBERT O'HANLON		635 MIDLAND AVENUE GARFIELD NJ 07026	07/09/2007	07/09/2012
DOL	DOL		ROBERT STEVENSON		571 MILES SQUARE ROAD YONKERS NY 10701	04/04/2007	04/04/2012
DOL	DOL	*****1721	ROBERTS CONSTRUCTION OF UPSTATE NEW YORK INC		5 SANGER AVENUE NEW HARTFORD NY 13413	01/28/2009	01/28/2014
DOL	DOL	*****3467	ROCKERS AND NOCKERS LLC		207 RIVERVIEW ROAD REXFORD NY 12148	10/23/2007	10/23/2012
DOL	DOL		ROGER A HOEK JR		22 BLACK HAW ROAD PINE BUSH NY 12566	06/10/2005	06/10/2010
DOL	DOL		RONALD R SAVOY	C/O CNY MECHANICAL ASSOCIATES INC	P O BOX 250 EAST SYRACUSE NY 13057	11/06/2008	11/06/2013

Article 8

DOL	DOL		ROSARIO CARRUBBA		5755 NEWHOUSE ROAD EAST AMHERST NY 14051	10/10/2007	10/10/2012
DOL	DOL		RUDOLPH NEUSS		8 FAR HORIZONS DRIVE NEWBURGH NY 12550	09/06/2006	09/06/2011
DOL	DOL		RUSSELL TUPPER		8346 BREWERTON ROAD CICERO NY 13039	07/06/2007	07/06/2012
DOL	DOL		RUTH H SUTTON		939 GROVESIDE ROAD BUSKIRK NY 12028	08/27/2008	08/27/2013
DOL	DOL	*****2585	S B WATERPROOFING INC		SUITE #3R 2167 CONEY ISLAND AVENUEBROOKLYN NY 11223	11/04/2009	11/04/2014
DOL	DOL	*****9066	SAMAR PAINTING & DECORATING INC		137 E MAIN STREET ELMSFORD NY 10523	12/01/2008	12/01/2013
DOL	NYC	*****0987	SCHWARTZ ELECTRIC CONTRACTORS INC		89 WALKER STREET NEW YORK NY 10013	01/04/2008	01/04/2013
DOL	DOL	*****6348	SEABURY ENTERPRISES LLC		22562 SEA BASS DRIVE BOCA RATON FL 33428	10/10/2007	10/10/2012
DOL	NYC	*****4020	SERVI-TEK ELEVATOR CORP		2546 EAST TREMONT AVENUE BRONX NY 10461	07/16/2009	07/16/2014
DOL	NYC	*****8252	SEVERN TRENT ENVIRONMENTAL SERVICES INC		16337 PARK ROW HOUSTON TX 77084	06/12/2007	06/12/2012
DOL	DOL	*****0256	SIERRA ERECTORS INC		79 MADISON AVE - FL 17 NEW YORK NY 10016	04/16/2009	04/16/2014
DOL	DOL	*****0415	SIGNAL CONSTRUCTION LLC		199 GRIDER STREET BUFFALO NY 14215	11/14/2006	02/25/2015
DOL	DOL	*****8469	SIGNATURE SEALCOATING & STRIPPING SERVICE		345 LIVINGSTON AVENUE JAMESTOWN NY 14702	04/04/2007	04/04/2012
DOL	DOL	*****9397	SKY COMMUNICATIONS, INC.		PO BOX 278 DEWITT NY 13214	02/20/2007	02/20/2012
DOL	AG		SN CONTRACTING CORP		131 47TH STREET BROOKLYN NY 11232	01/25/2007	01/25/2012
DOL	AG	*****7480	SNA CONTRACTING CORP		131 47TH STREET BROOKLYN NY 11232	01/26/2007	01/25/2012
DOL	AG	*****2738	SNA CONTRACTING CORP.		131 47TH STREET BROOKLYN NY 11232	01/25/2007	01/25/2012
DOL	AG		SOLOMON WERZBERGER		56 LYNCREST DRIVE MONSEY NY 10952	08/18/2005	08/18/2010
DOL	DOL	*****0918	SPECTRUM CONTRACTING GROUP INC		875 THIRD AVENUE NEW YORK NY 10022	12/11/2006	12/11/2011
DOL	AG	*****1355	SPIRIDON ANTHOULIS		131 47TH STREET BROOKLYN NY 11232	01/25/2007	01/25/2012
DOL	AG		STACEY GOUZOS		131 47TH STREET BROOKLYN NY 11232	01/25/2007	01/25/2012
DOL	DOL	*****3496	STAR INTERNATIONAL INC		89-51 SPRINGFIELD BLVD QUEENS VILLAGE NY 11427	08/11/2003	08/11/3003
DOL	NYC	*****6650	START ELEVATOR CONSTRUCTION, INC.		4350 BULLARD AVENUE BRONX NY 10466	01/28/2008	01/28/2013
DOL	NYC	*****3896	START ELEVATOR MAINTENANCE, INC.		4350 BULLARD AVENUE BRONX NY 10466	01/28/2008	01/28/2013
DOL	NYC	*****1216	START ELEVATOR REPAIR, INC.		4350 BULLARD AVENUE BRONX NY 10466	01/28/2008	01/28/2013
DOL	NYC	*****2101	START ELEVATOR, INC.		4350 BULLARD AVENUE BRONX NY 10466	01/28/2008	01/28/2013
DOL	DOL		STEED GENERAL CONTRACTORS INC		1445 COMMERCE AVENUE BRONX NY 10461	10/09/2007	10/09/2012
DOL	DOL		STEPHEN BALZER		34-08 PARKWAY DRIVE BALDWIN NY 11510	07/01/2008	07/01/2013
DOL	DOL		STEVE PAPASTEFANOU		1445 COMMERCE AVENUE BRONX NY 10461	10/09/2007	10/09/2012
DOL	AG		STEVEN TISCHLER		1465 46TH STREET BROOKLYN NY 11212	08/18/2005	08/18/2010
DOL	DOL	*****4081	STS CONSTRUCTION OF WNY		893 EAGLE STREET BUFFALO NY 14210	06/09/2009	06/09/2014
DOL	DOL	*****5966	SUPREME SPORT SURFACES, INC.		66 BENEDICT STREET CASTLETON NY 12033	03/02/2007	03/02/2012
DOL	DOL	*****2036	SURACI ENTERPRISES INC		364 BLEAKER ROAD ROCHESTER NY 14609	10/25/2007	10/25/2012
DOL	DOL	*****9336	SWITZER SALES	ARTIERI SPECIALTIES	107 STEVENS STREET LOCKPORT NY 14094	11/04/2009	11/04/2014
DOL	AG		TAO GENERAL CONTRACTORS INC		131 47TH STREET BROOKLYN NY 11232	01/25/2007	01/25/2012
DOL	DOL		THEODORE F FAULKS		18 FIREWEED TRAIL HILTON NY 14468	06/10/2008	06/10/2013
DOL	DOL		THOMAS ASCHMONEIT		79 MADISON AVENUE - FL 17 NEW YORK NY 10016	04/16/2009	04/16/2014

Article 8

DOL	DOL		THOMAS E. MOONEY		164 WINSLOW STREET WATERTOWN NY 13601	11/07/2006	11/07/2011
DOL	DOL		THOMAS GORMALLY		250 KNEELAND AVENUE YONKERS NY 10705	07/09/2007	07/09/2012
DOL	DOL		TIMOTHY P SUCH		893 EAGLE STREET BUFFALO NY 14210	06/09/2009	06/09/2014
DOL	DOL		TNT DEMOLITION AND ENVIRONMENTAL INC		355 COUNTY ROUTE 8 FULTON NY 13069	08/08/2009	08/19/2014
DOL	DOL	*****3983	TOMMASO ALLOCCA		15 PINE AIRE DRIVE BAY SHORE NY 11706	08/01/2005	08/01/2010
DOL	DOL	*****3315	TOTAL DOOR SUPPLY & INSTALLATION INC		16 JOY DRIVE NEW HYDE PPARK NY 11040	01/05/2010	01/05/2015
DOL	DOL	*****3315	TOTAL DOOR SUPPLY & INSTALLATION INC		16 JOY DRIVE NEW HYDE PPARK NY 11040	01/05/2010	01/05/2015
DOL	DOL		TRI STATE TRUCKING INC		140 ARMSTRONG AVENUE SYRACUSE NY 13209	10/21/2009	10/21/2014
DOL	DOL	*****9640	TROPIC CONSTRUCTION CORP		59-45 56TH AVENUE MASPETH NY 11378	08/16/2005	08/16/2010
DOL	DOL	*****8430	TROPIC ROOFING CORP.		59-45 56TH AVENUE MASPETH NY 11378	08/16/2005	08/16/2010
DOL	NYC	*****5184	UDDIN USA CORP		663 DEGRAW STREET BROOKLYN NY 11217	05/17/2007	05/17/2012
DOL	DOL	*****8663	URBAN-SUBURBAN RECREATION INC		3 LUCON DRIVE DEER PARK NY 11728	06/20/2007	06/20/2012
DOL	DA		VASILIOS TSIMITRAS		235 91ST STREET BROOKLYN NY 11209	11/27/2006	11/27/2011
DOL	DOL		VIRGINIA L CAPONE		137 E MAIN STREET ELMSFORD NY 10523	12/01/2008	12/01/2013
DOL	NYC	*****9936	VISHAL CONSTRUCTION INC		73-12 35TH AVE - APT F63 JACKSON HEIGHTS NY 11272	03/04/2010	03/04/2015
DOL	NYC	*****5466	VIVA VICTORIA ENTERPRISES LTD		10317 90TH STREET OZONE PARK NY 11417	06/12/2006	06/12/2011
DOL	DOL	*****0329	WET PAINT CO. OF OSWEGO, INC		19 E. CAYUGA STREET OSWEGO NY 13126	05/15/2008	05/15/2013
DOL	DOL		WHITE PLAINS CARPENTRY CORP		220 FERRIS AVENUE WHITE PLAINS NY 10603	12/04/2009	12/04/2014
DOL	DOL		WILLIAM PUTNAM		50 RIDGE ROAD BUFFALO NY 14215	09/03/2008	09/03/2013
DOL	DA		WILLIAM TSIMITRAS		235 91ST STREET BROOKLYN NY 11209	11/27/2006	11/27/2011
DOL	DOL		WILLIAM W FARMER JR		112 HUDSON AVENUE ROCHESTER NY 14605	10/19/2009	10/19/2014
DOL	DOL		WINSTON J. GOINS, SR.		87 MALLING DRIVE ROCHESTER NY 14621	05/01/2006	05/01/2011
DOL	AG		YANG GENERAL CONTRACTING LTD		131 47TH STREET BROOKLYN NY 11232	01/25/2007	01/25/2012
DOL	AG	*****0288	YIN CONSTRUCTION LTD		131 47TH STREET BROOKLYN NY 11232	01/25/2007	01/25/2012
DOL	AG		YULY ARONSON		700 SUMMER STREET STAMFORD CT	11/24/2009	11/24/2014
DOL	AG	*****1564	ZARBEN GENERAL CONSTRUCTION INC		131 47TH STREET BROOKLYN NY 11232	01/25/2007	01/25/2012
DOL	DOL		ZEPHENIAH DAVIS		2068 ANTHONY AVENUE BRONX NY 10457	12/26/2007	12/26/2012

NYSDOL Bureau of Public Work Debarment List 05/05/2010

Article 9

AGENCY	Fiscal Officer	SSN/FEIN	EMPLOYER NAME	EMPLOYER DBA NAME	ADDRESS	DEBARMENT START DATE	DEBARMENT END DATE
DOL	NYC	*****9124	MASGON PATROL SERVICES		2025 BROADWAY NEW YORK NY 10023	11/29/2005	11/29/2010

APPENDIX D

APPENDIX D
STANDARD CLAUSES FOR ALL NEW YORK STATE CONTRACTS

The parties to the attached contract, license, lease, amendment or other agreement of any kind (hereinafter, "the contract" or "this contract") agree to be bound by the following clauses which are hereby made a part of the contract (the word "Contractor" herein refers to any party other than the State, whether a contractor, licenser, licensee, lessor, lessee or any other party):

EXECUTORY CLAUSE. In accordance with Section 41 of the State Finance Law, the State shall have no liability under this contract to the Contractor or to anyone else beyond funds appropriated and available for this contract.

2. NON-ASSIGNMENT CLAUSE. In accordance with Section 138 of the State Finance Law, this contract may not be assigned by the Contractor or its right, title or interest therein assigned, transferred, conveyed, sublet or otherwise disposed of without the previous consent, in writing, of the State and any attempts to assign the contract without the State's written consent are null and void. The Contractor may, however, assign its right to receive payment without the State's prior written consent unless this contract concerns Certificates of Participation pursuant to Article 5-A of the State Finance Law.

3. COMPTROLLER'S APPROVAL. In accordance with Section 112 of the State Finance Law (or, if this contract is with the State University or City University of New York, Section 355 or Section 6218 of the Education Law), if this contract exceeds $10,000 (or the minimum thresholds agreed to by the Office of the State Comptroller for certain S.U.N.Y. and C.U.N.Y contracts), or if this is an amendment for any amount to a contract which, as so amended, exceeds said statutory amount, or if, by this contract, the State agrees to give something other than money when the value or reasonably estimated value of such consideration exceeds $10,000, it shall not be valid, effective or binding upon the State until it has been approved by the State Comptroller and filed in his office.

4. WORKERS' COMPENSATION BENEFITS. In accordance with Section 142 of the State Finance Law, this contract shall be void and of no force and effect unless the Contractor shall provide and maintain coverage during the life of this contract for the benefit of such employees as are required to be covered by the provisions of the Workers' Compensation Law.

5. NON-DISCRIMINATION REQUIREMENTS. In accordance with Article 15 of the Executive Law (also known as the Human Rights Law) and all other State and Federal statutory and constitutional non-discrimination provisions, the Contractor will not discriminate against any employee or applicant for employment because of race, creed, color, sex, national origin, age, disability or marital status. Furthermore, in accordance with Section 220-e of the Labor Law, if this is a contract for the construction, alteration or repair of any public building or public work or for the manufacture, sale or distribution of materials, equipment or supplies, and to the extent that this contract shall be performed within the State of New York, Contractor agrees that neither it nor its subcontractors shall, by reason or race, creed, color, disability, sex, or national origin: (a) discriminate in hiring against any New York State citizen who is qualified and available to perform the work; or (b) discriminate against or intimidate any employee hired for the performance of work under this contract. If this is a building service contract as defined in Section 230 of the Labor Law, then, in accordance with Section 239 thereof, Contractor agrees that neither it nor its subcontractors shall, by reason of race, creed, color, national origin, age, sex or disability: (a) discriminate in hiring against any New York State citizen who is qualified and available to perform the work; or (b) discriminate against or intimidate any employee hired for the performance of work under this contract. Contractor is subject to fines of $50.00 per person per day for any violation of Section 220-e or Section 239 as well as possible termination of this contract and forfeiture of all moneys due hereunder for a second or subsequent violation.

6. WAGE AND HOURS PROVISIONS. If this is a public work contract covered by Article 8 of the Labor Law or a building service contract covered by Article 9 thereof, neither Contractor's employees nor the employees of its subcontractors may be required or permitted to work more than the number of hours or days stated in said statutes, except as otherwise provided in the Labor Law and as set forth in prevailing wage and supplement schedules issued by the State Labor Department. Furthermore, Contractor and its subcontractors must pay at least the prevailing wage rate and pay or provide the prevailing supplements, including the premium rates for overtime pay, as determined by the State Labor Department in accordance with the Labor Law.

7. NON-COLLUSIVE BIDDING REQUIREMENT. In accordance with Section 139-d of the State Finance Law, if this contract was awarded based upon the submission of bids, Contractor warrants, under penalty of perjury, that its bid was arrived at independently and without collusion aimed at restricting competition. Contractor further warrants that, at the time Contractor submitted its bid, an authorized and responsible person executed and delivered to the State a non-collusive bidding certification on Contractor's behalf.

8. INTERNATIONAL BOYCOTT PROHIBITION. In accordance with Section 220-f of the Labor Law and Section 139-h of the State Finance Law, if this contract exceeds $5,000, the Contractor agrees, as a material condition of the contract, that neither the Contractor nor any substantially owned or affiliated person, firm, partnership or corporation has participated, is participating, or shall participate in an international boycott in violation of the federal Export Administration Act of 1979 (50 USC App. Sections 2401 et seq.) or regulations thereunder. If such Contractor, or any of the aforesaid affiliates of Contractor, is convicted or is otherwise found to have violated said laws or regulations upon the final determination of the United States Commerce Department or any other appropriate agency of the United States subsequent to the contract's execution, such contract, amendment or modification thereto shall be rendered forfeit and void. The Contractor shall so notify the State Comptroller within five (5) business days of such conviction, determination or disposition of appeal (2NYCRR 105.4).

9. SET-OFF RIGHTS. The State shall have all of its common law, equitable and statutory rights of set-off. These rights shall include, but not be limited to, the State's option to withhold for the purposes of set-off any moneys due to the Contractor under this contract up to any amounts due and owing to the State with

regard to this contract, any other contract with any State department or agency, including any contract for a term commencing prior to the term of this contract, plus any amounts due and owing to the State for any other reason including, without limitation, tax delinquencies, fee delinquencies or monetary penalties relative thereto. The State shall exercise its set-off rights in accordance with normal State practices including, in cases of set-off pursuant to an audit, the finalization of such audit by the State agency, its representatives, or the State Comptroller.

10. RECORDS. The Contractor shall establish and maintain complete and accurate books, records, documents, accounts and other evidence directly pertinent to performance under this contact (hereinafter, collectively, "the Records"). The Records must be kept for the balance of the calendar year in which they were made and for six (6) additional years thereafter. The State Comptroller, the Attorney General and any other person or entity authorized to conduct an examination, as well as the agency or agencies involved in this contract, shall have access to the Records during normal business hours at an office of the Contractor within the State of New York or, if no such office is available, at a mutually agreeable and reasonable venue within the State, for the term specified above for the purposes of inspection, auditing and copying. The State shall take reasonable steps to protect from public disclosure any of the Records which are exempt from disclosure under Section 87 of the Public Officers Law (the "Statute") provided that: (i) the Contractor shall timely inform an appropriate State official, in writing, that said records should not be disclosed; and (ii) said records shall be sufficiently identified; and (iii) designation of said records as exempt under the Statute is reasonable. Nothing contained herein shall diminish, or in any way adversely affect, the State's right to discovery in any pending or future litigation.

11. IDENTIFYING INFORMATION AND PRIVACY NOTIFICATION. (a) FEDERAL EMPLOYER IDENTIFICATION NUMBER and/or FEDERAL SOCIAL SECURITY NUMBER. All invoices or New York State standard vouchers submitted for payment for the sale of goods or services or the lease of real or personal property to a New York State agency must include the payee's identification number, i.e., the seller's or lessor's identification number. The number is either the payee's Federal employer identification number or Federal social security number, or both such numbers when the payee has both such numbers. Failure to include this number or numbers may delay payment. Where the payee does not have such number or numbers, the payee, on its invoice or New York State standard voucher, must give the reason or reasons why the payee does not have such number or numbers.

(b) PRIVACY NOTIFICATION. (1) The authority to request the above personal information from a seller of goods or services or a lessor of real or personal property, and the authority to maintain such information, is found in Section 5 of the State Tax Law. Disclosure of this information by the seller or lessor to the State is mandatory. The principal purpose for which the information is collected is to enable the State to identify individuals, businesses and others who have been delinquent in filing tax returns or may have understated their tax liabilities and to generally identify persons affected by the taxes administered by the Commissioner of Taxation and Finance. The information will be used for tax administration purposes and for any other purpose authorized by law. (2) The personal information is requested by the purchasing unit of the agency contracting to purchase the goods or services or lease the real or personal property covered by this contract or lease. The information is maintained in New York State's Central Accounting System by the Director of State Accounts, Office of the State Comptroller, AESOB, Albany, New York 12236.

12. EQUAL EMPLOYMENT OPPORTUNITIES FOR MINORITIES AND WOMEN. In accordance with Section 312 of the Executive Law, if this contract is: (i) a written agreement or purchase order instrument, providing for a total expenditure in excess of $25,000.00, whereby a contracting agency is committed to expend or does expend funds in return for labor, services, supplies, equipment, materials or any combination of the foregoing, to be performed for, or rendered or furnished to the contracting agency; or (ii) a written agreement in excess of $100,000.00 whereby a contracting agency is committed to expend or does expend funds for the acquisition, construction, demolition, replacement, major repair or renovation of real property and improvements thereon; or (iii) a written agreement in excess of $100,000.00 whereby the owner of a State assisted housing project is committed to expend or does expend funds for the acquisition, construction, demolition, replacement, major repair or renovation of real property and improvements thereon for such project, then:

(a) The Contractor will not discriminate against employees or applicants for employment because of race, creed, color, national origin, sex, age, disability or marital status, and will undertake or continue existing programs of affirmative action to ensure that minority group members and women are afforded equal employment opportunities without discrimination. Affirmative action shall mean recruitment, employment, job assignment, promotion, upgradings, demotion, transfer, layoff, or termination and rates of pay or other forms of compensation;

(b) at the request of the contracting agency, the Contractor shall request each employment agency, labor union, or authorized representative of workers with which it has a collective bargaining or other agreement or understanding, to furnish a written statement that such employment agency, labor union or representative will not discriminate on the basis of race, creed, color, national origin, sex, age, disability or marital status and that such union or representative will affirmatively cooperate in the implementation of the contractor's obligations herein; and

(c) the Contractor shall state, in all solicitations or advertisements for employees, that, in the performance of the State contract, all qualified applicants will be afforded equal employment opportunities without discrimination because of race, creed, color, national origin, sex, age, disability or marital status.

Contractor will include the provisions of "a", "b", and "c" above, in every subcontract over $25,000.00 for the construction, demolition, replacement, major repair, renovation, planning or design of real property and improvements thereon (the "Work") except where the Work is for the beneficial use of the Contractor. Section 312 does not apply to: (i) work, goods or services unrelated to this contract; or (ii) employment outside New York State; or (iii) banking services, insurance policies or the sale of securities. The State shall consider compliance by a contractor or subcontractor with the requirements of any federal law concerning equal employment opportunity which effectuates the purpose of this section. The contracting agency shall determine whether the imposition of the requirements of the provisions hereof

duplicate or conflict with any such federal law and if such duplication or conflict exists, the contracting agency shall waive the applicability of Section 312 to the extent of such duplication or conflict. Contractor will comply with all duly promulgated and lawful rules and regulations of the Governor's Office of Minority and Women's Business Development pertaining hereto.

13. CONFLICTING TERMS. In the event of a conflict between the terms of the contract (including any and all attachments thereto and amendments thereof) and the terms of this Appendix D, the terms of this Appendix D shall control.

14. GOVERNING LAW. This contract shall be governed by the laws of the State of New York except where the Federal supremacy clause requires otherwise.

15. LATE PAYMENT. Timeliness of payment and any interest to be paid to Contractor for late payment shall be governed by Article XI-A of the State Finance Law to the extent required by law.

16. NO ARBITRATION. Disputes involving this contract, including the breach or alleged breach thereof, may not be submitted to binding arbitration (except where statutorily authorized), but must, instead, be heard in a court of competent jurisdiction of the State of New York.

17. SERVICE OF PROCESS. In addition to the methods of service allowed by the State Civil Practice Law & Rules ("CPLR"), Contractor hereby consents to service of process upon it by registered or certified mail, return receipt requested. Service hereunder shall be complete upon Contractor's actual receipt of process or upon the State's receipt of the return thereof by the United States Postal Service as refused or undeliverable. Contractor must promptly notify the State, in writing, of each and every change of address to which service of process can be made. Service by the State to the last known address shall be sufficient. Contractor will have thirty (30) calendar days after service hereunder is complete in which to respond.

18. PROHIBITION ON PURCHASE OF TROPICAL HARDWOODS. The Contractor certifies and warrants that all wood products to be used under this contract award will be in accordance with, but not limited to, the specifications and provisions of State Finance Law Section 165. (Use of Tropical Hardwoods) which prohibits purchase and use of tropical hardwoods, unless specifically exempted, by the State or any governmental agency or political subdivision or public benefit corporation. Qualification for an exemption under this law will be the responsibility of the contractor to establish to meet with the approval of the State.

In addition, when any portion of this contract involving the use of woods, whether supply or installation, is to be performed by any subcontractor, the prime Contractor will indicate and certify in the submitted bid proposal that the subcontractor has been informed and is in compliance with specifications and provisions regarding use of tropical hardwoods as detailed in Section 165 of the State Finance Law. Any such use must meet with the approval of the State; otherwise, the bid may not be considered responsive. Under bidder certifications, proof of qualification for exemption will be the responsibility of the Contractor to meet with the approval of the State.

19. MACBRIDE FAIR EMPLOYMENT PRINCIPLES. In accordance with the MacBride Fair Employment Principles (Chapter 807 of the Laws of 1992), the Contractor hereby stipulates that the Contractor either (a) has no business operations in Northern Ireland, or (b) shall take lawful steps in good faith to conduct any business operations in Northern Ireland in accordance with the MacBride Fair Employment Principles (as described in Section 165 of the New York State Finance Law), and shall permit independent monitoring of compliance with such principles.

20. OMNIBUS PROCUREMENT ACT OF 1992. It is the policy of New York State to maximize opportunities for the participation of New York State business enterprises, including minority and women-owned business enterprises as bidders, subcontractors and suppliers on its procurement contracts.

Information on the availability of New York State subcontractors and suppliers is available from:

Empire State Development Corp.
Division of Small Business
One Commerce Plaza
Albany, New York 12245
Phone: (518) 473-0499
Fax: (518) 474-1512

A directory of minority and women-owned business enterprises is available from:

Empire State Development Corp.
Minority & Women's Business Development Div.
One Commerce Plaza
Albany, New York 12245
Phone: (518) 473-0582
Fax: (518) 473-0665
and
Empire State Development Corp.
633 Third Avenue
New York, NY 10017
Phone: (212) 803-2414
Fax: (212) 803-3223
Internet: http://www.empire.state.ny.us/

The Omnibus Procurement Act of 1992 requires that by signing this bid proposal or contract, as applicable, Contractors certify that whenever the total bid amount is greater than $1 million:

(a) The Contractor has made reasonable efforts to encourage the participation of New York State Business Enterprises as suppliers and subcontractors, including certified minority and women-owned business enterprises, on this project, and has retained the documentation of these efforts to be provided upon request to the State;

(b) The Contractor has complied with the Federal Equal Opportunity Act of 1972 (P.L. 92-261), as amended;

(c) The Contractor agrees to make reasonable efforts to provide notification to New York State residents of employment opportunities on this project through listing any such positions with the Job Service Division of the New York State Department of Labor, or providing such notification in such manner as is consistent with existing collective bargaining contracts or agreements. The Contractor agrees to document

these efforts and to provide said documentation to the State upon request; and

(d) The Contractor acknowledges notice that the State may seek to obtain offset credits from foreign countries as a result of this contract and agrees to cooperate with the State in these efforts.

21. RECIPROCITY AND SANCTIONS PROVISIONS. Bidders are hereby notified that if their principal place of business is located in a state that penalizes New York State vendors, and if the goods or services they offer will be substantially produced or performed outside New York State, the Omnibus Procurement Act 1994 amendments (Chapter 684, Laws of 1994) require that they be denied contracts which they would otherwise obtain. NOTE: New Mexico, S. Carolina, Alaska, W. Virginia, Oklahoma, Montana, Wyoming, Louisiana and Hawaii are the states currently subject to this provision.

Revised January 1996

APPENDIX E

STATE OF NEW YORK
DEPARTMENT OF LABOR
Bureau of Public Work
STATE OFFICE BUILDING CAMPUS
ALBANY, N.Y. 12240

- Notice to ALL Contracting Agencies –

Your attention is directed to the following Amendment to Article 8, Section 220 (3-a) of the NYS Labor Law:

Assembly Bill Number 1839, entitled:
"AN ACT to amend the Labor Law, in relation to signs posted at public works projects"

APPROVED:

This bill amends Section 220 (3-a) of the Labor Law to set forth specific requirements for signs at public work locations listing all prevailing wages specified in the contract. The bill mandates that such signs "be written in plain English and titled, in lettering no smaller than two inches in height and two inches in width," with the phrase "Prevailing Rate of Wages." The bill further requires that the sign by weatherproof. The bill takes effect on March 6, 2000. Signed into law on September 7, 1999.

Ensuring that workers receive the appropriate wage when working on public work projects is a core mission for the Department of Labor ("Department"). This bill will assist the Department in carrying out this mission by educating workers on public work projects as to the applicable wage and supplements for each project.

On the reverse, please find the complete text of the Bill, which contains various other aspects of the law, which affect contracting agencies. contractors and subcontractors working on public work projects.

Text of New York State Bill A01839

STATE OF NEW YORK

THE PEOPLE OF THE STATE OF NEW YORK, REPRESENTED IN SENATE AND ASSEMBLY, DO ENACT AS FOLLOWS:

Section 1 Paragraph a of subdivision 3-a of section 110 of the labor law as amended by chapter 565 of the law as of 1997, is amended to read as follows:

a. It shall be the duty of the department of jurisdiction as defined in this section to ascertain from the plans and specifications for classification of workmen, mechanics and laborers to be employed on such project. Such department shall file with the fiscal officer, as defined in this section, the classification of workmen, mechanics and laborers to be employed upon such public works project, together with a statement of the work to be performed by each such classification. From such statement it shall be the duty of the fiscal officer to make a proper classification of such workmen, mechanics and laborers taking into account whether the work is heavy and highway, building, sewer and water, tunnel work or residential and to make a determination of the schedules of wages and supplements to be paid or provided, as the case may be, therefore. The contractor and every sub-contractor on public works contracts shall post in a prominent and accessible place on the site (of the work) **WHERE THE WORK IS PERFORMED** a legible statement of all wage rates and supplements as specified in the contract to be paid or provided, as the case may be, for the various classes of mechanics, workingmen, or laborers employed on the work **SUCH POSTED STATEMENT SHALL BE WRITTEN IN PLAIN ENGLISH AND TITLED, IN LETTERING NO SMALLER THAN TWO INCHES IN HEIGHT AND TWO INCHES IN WIDTH, WITH THE PHRASE 'PREVAILING RATE OF WAGES' SUCH POSTED STATEMENT SHALL BE CONSTRUCTED**

EXPLANATION: Matter in ITALICS (underscored) is new. Matter in brackets [ ] is old law to be omitted

LBD04:89-01-9

OF MATERIALS CAPABLE OF WITHSTANDING ADVERSE WEATHER CONDITIONS

The contractor and every sub-contractor shall keep original payrolls or transcripts thereof, subscribed and affirmed by him as true under the penalties of perjury, showing the hours and days worked by each workman, laborer or mechanic, the occupation at which he worked, the hourly wage rate paid and the supplements paid or provided, on the site of the work where the contractor or sub-contractor maintains no regular place of business in New York state and where the amount of the contract is in excess of twenty-five thousand dollars. All other contractors or sub-contractors shall produce within five days on the site of the work upon formal order of the commissioner or his designed representative such original payrolls or transcripts thereof, subscribed and affirmed by him as true under the penalties of perjury, as may be deemed necessary to adequately enforce the provisions of this article. Every contractor and sub-contractor shall submit to the department of jurisdiction within thirty days after issuance of its first payroll and every thirty days thereafter. A transcript of the original payroll record as provided by this article, subscribed and affirmed as true under the penalties of perjury. The department of jurisdiction, as herein referred to shall be the department of the state, board or officer in the state, or municipal corporation or commission or board appointed pursuant to law, whose duty it is to prepare or direct the preparation of the plans and specifications for a public work project.

APPENDIX E
STANDARD CLAUSES FOR ALL NEW YORK STATE DEPARTMENT OF ENVIRONMENTAL CONSERVATION CONTRACTS

The parties to the attached contract, license, lease, amendment or other agreement of any kind (hereinafter "the contract" or "this contract") agree to be bound by the following clauses which are hereby made a part of the contract. The word "Contractor" herein refers to any party to the contract, other than the New York State Department of Environmental Conservation (hereinafter "Department").

I. The Department shall have the right to postpone, suspend, abandon or terminate this contract, and such actions shall in no event be deemed a breach of contract. In the event of any termination, postponement, delay, suspension or abandonment, the Contractor shall deliver to the Department all data, reports, plans, or other documentation related to the performance of this contract, including but not limited to guarantees, warranties, as-built plans and shop drawings. In any of these events, the Department shall make settlement with the Contractor upon an equitable basis as determined by the Department which shall fix the value of the work which was performed by the Contractor prior to the postponement, suspension, abandonment or termination of this contract. This clause shall not apply to this contract if the contract contains other provisions applicable to postponement, suspension or termination of the contract.

II. The Contractor agrees that it will indemnify and save harmless the Department and the State of New York from and against all losses from claims, demands, payments, suits, actions, recoveries and judgments of every nature and description brought or recovered against it by reason of any omission or act of the Contractor, its agents, employees, or subcontractors in the performance of this contract. The Department and the State of New York may retain such monies from the amount due Contractor as may be necessary to satisfy any claim for damages, costs and the like, which is asserted against the Department and/or the State of New York.

III. (a) Conflict of Interest. To the best of the Contractor's knowledge and belief, the Contractor warrants that there are no relevant facts or circumstances which could give rise to an organizational conflict of interest, as herein defined, or that the Contractor has disclosed all such relevant information to the Department.

(b) An organizational conflict of interest exists when the nature of the work to be performed under this contract may, without some restriction on future activities, either result in an unfair competitive advantage to the Contractor or impair or appear to impair the Contractor's objectivity in performing the work for the Department.

(c) The Contractor agrees that if an actual, apparent, or potential organizational conflict of interest is discovered at any time after award, whether before or during performance, the Contractor will immediately make a full disclosure in writing to the Department. This disclosure shall include a description of actions which the Contractor has taken or proposes to take, after consultation with the Department, to avoid, mitigate, or minimize the actual or potential conflict.

(d) Remedies - The Department may terminate this contract in whole or in part, if it deems such termination necessary to avoid an organizational or personal conflict of interest, or an unauthorized disclosure or information. If the Contractor was aware of a potential conflict of interest prior to award, or discovered an actual or potential conflict after award and did not disclose or misrepresented relevant information to the Department, the Department may terminate the contract, or pursue such other remedies as may be permitted by the terms of Clause I of this Appendix or other applicable provisions of this contract regarding termination.

(e) In addition to the requirements of the above clauses with respect to "Organizational Conflicts of Interest," the following provision with regard to employee personnel performing under this contract shall apply until the earlier of the termination date of the affected employee(s) or the duration of the contract.

The Contractor agrees to notify the Department immediately of any actual, apparent or potential personal conflict of interest with regard to any employee, subcontractor employee, or consultant working on or having access to information regarding this contract, as soon as Contractor becomes aware of such conflict. A personal conflict of interest is defined as a relationship of an employee, subcontractor employee, or consultant with an entity that may impair or appear to impair the objectivity of the employee, subcontractor employee, or consultant in performing the contract work. The Department will notify the Contractor of the appropriate action to be taken.

(f) To the extent that the work under this contract requires access to proprietary or confidential business or financial data of other companies, and as long as such data remains proprietary or confidential, the Contractor shall protect such data from unauthorized use and disclosure and agrees not to use it to compete with such companies.

(g) The Contractor shall certify annually that, to the best of the Contractor's knowledge and belief, all actual, apparent or potential conflicts of interest, both personal and organizational, have been reported to the Department. Such certification must be signed by a senior executive of the Contractor and submitted in accordance with instructions provided by the Department. Along with the annual certification, the Contractor shall also submit an update of any changes in the conflict of interest plan submitted with its proposal for this contract. The initial certification shall cover the one-year period from the date of contract award, and all subsequent certifications shall cover successive annual periods thereafter. The certification is to be submitted no later than 45 days after the close of the previous certification period covered.

(h) The Contractor recognizes that employees in performing this contract may have access to data, either provided by the Department or first generated during contract performance, of a sensitive nature which should not be released without Department approval. Therefore, the Contractor agrees to obtain confidentiality agreements from

all employees working on requirements under this contract including subcontractors and consultants. Such agreements shall contain provisions which stipulate that each employee agrees that the employee will not disclose, either in whole or in part, to any entity external to the Department, Department of Health or the New York State Department of Law, any information or data provided by the Department or first generated by the Contractor under this contract, any site-specific cost information, or any enforcement strategy without first obtaining the written permission of the Department. If a contractor, through an employee or otherwise, is subpoenaed to testify or produce documents, which could result in such disclosure, the contractor must provide immediate advance notification to the Department so that the Department can authorize such disclosure or have the opportunity to take action to prevent such disclosure. Such agreements shall be effective for the life of the contract and for a period of five (5) years after completion of the contract.

(i) The Contractor agrees to insert in each subcontract or consultant agreement placed hereunder (except for subcontracts or consultant agreements for well drilling, fence erecting, plumbing, utility hookups, security guard services, or electrical services) provisions which shall conform substantially to the language of this clause, including this paragraph (i), unless otherwise authorized by the Department.

If this is a contract for work related to action at an inactive hazardous waste site, the following paragraph shall apply:

(j) Due to the scope and nature of this contract, the Contractor shall observe the following restrictions on future hazardous waste site contracting for the duration of the contract.

(1) The Contractor will be ineligible to enter into a contract for remedial action projects for which the Contractor has developed the statement of work or the solicitation package.

(2) The Contractor, during the life of the work assignment and for a period of five (5) years after the completion of the work assignment, agrees not to enter into a contract with or to represent any party with respect to any work relating to remedial activities or work pertaining to a site where the Contractor previously performed work for the Department under this contract without the prior written approval of the Department.

(3) The Contractor agrees in advance that if any bids/proposals are submitted for any work for a third party that would require written approval of the Department prior to entering into a contract because of the restrictions of this clause, then the bids/proposals are submitted at the Contractor's own risk, and no claim shall be made against the Department to recover bid/proposal costs as a direct cost whether the request for authorization to enter into the contract is denied or approved.

IV. All requests for payment by the Contractor must be submitted on forms supplied and approved by the Department. Each payment request must contain such items of information and supporting documentation as are required by the Department, and shall be all-inclusive for the period of time covered by the payment request.

V. To the extent that federal funds are provided to the Contractor or used in paying the Contractor under this contract, the Contractor agrees that it will comply with all applicable federal laws and regulations, including but not limited to those laws and regulations under which the Federal funds were authorized. The Contractor further agrees to insert in any subcontract hereunder, provisions which shall conform substantially to the language of this clause, including this paragraph.

VI. The Contractor shall have the status of an independent contractor. Accordingly, the Contractor agrees that it will conduct itself in a manner consistent with such status, and that it will neither hold itself out as, nor claim to be, an officer or employee of the Department by reason of this contract. It further agrees that it will not make any claim, demand or application to the Department for any right or privilege applicable to an officer or employee of the Department, including but not limited to worker's compensation coverage, unemployment insurance benefits, social security coverage, or retirement membership or credit.

VII. The terms contained in this clause shall have the definitions as given in, and shall be construed according to the intent of Article 15-A of the Executive Law, 9 NYCRR Part 540, et seq., Article 52 of the Environmental Conservation Law and 6 NYCRR Part 615, et seq., as applicable, and any goals established by this clause are subject to the intent of such laws and regulations.

(a) If the maximum contract price herein equals or exceeds $25,000, and this contract is for labor, services, supplies, equipment, or materials; or

If the maximum contract price herein equals or exceeds $100,000 and this contract is for the acquisition, construction, demolition, replacement, major repair or renovation of real property and improvements thereon;

The affirmative action provisions and equal employment opportunity provisions contained in this paragraph and paragraphs b-f of this clause shall be applicable within the limitations established by Executive Law §§312 and 313 and the applicable regulations.

(1) The Contractor is requested to make good faith efforts to subcontract at least ___% of the dollar value of this contract to Minority Owned Business Enterprises (MBEs) and at least ___% of such value to Women Owned Business Enterprises (WBEs).

(2) The Contractor is requested to make good faith efforts to employ or contractually require any subcontractor with whom it contracts to make good faith efforts to employ minority group members for at least 10% of, and women for at least 10% of, the workforce hours required to perform the work under this contract.

(3) The Contractor is requested to make good faith efforts to solicit the meaningful participation by enterprises identified in the NYS Directory of Certified

Businesses provided by the Governor's Office of Minority and Women's Business Development.

(b) The Contractor agrees to include the provisions set forth in paragraph (a) above and paragraphs (a), (b), and (c) of clause 12 of Appendix D in every subcontract in such a manner that the provisions will be binding upon each subcontractor as to work under such subcontract. For the purpose of this paragraph, a "subcontract" shall mean an agreement providing for a total expenditure in excess of $25,000 for the construction, demolition, replacement, major repair, renovation, planning or design of real property and improvements thereon in which a portion of the Contractor's obligation under a State contract is undertaken or assumed.

(c) The Contractor is requested to make good faith efforts to utilize the MBE/WBEs identified in the utilization plan to the extent indicated in such plan, and otherwise to implement it according to its terms. The Contractor is requested to report on such implementation periodically as provided by the contract, or annually, whichever is more frequent. The Contractor also agrees to incorporate into any contract with subcontractors, provisions applicable to recordkeeping, reporting, notice requirements and actions suggested by the Department to implement the utilization plan, and the intent of the Executive Law Article 15-A, the regulations promulgated thereunder, and other applicable law and regulations.

(d) The Contractor hereby agrees to comply with the intent of the applicable provisions of Executive Law Article 15-A and the regulations promulgated thereunder. Executive Law §§312 and 316 are hereby incorporated by reference.

VIII. Prior to the commencement of any work under this contract, the Contractor is required to meet all legal requirements necessary in the performance of the contract. This includes but is not limited to compliance with all applicable federal, state and local laws and regulations promulgated thereunder. It is the Contractor's responsibility to obtain any necessary permits, or other authorizations. By signing this contract, the Contractor affirmatively represents that it has complied with said laws, unless it advises the Department otherwise, in writing. The Department signs this contract in reliance upon this representation.

During the term of this contract, and any extensions thereof, the Contractor must remain in compliance with said laws. A failure to notify the Department of noncompliance of which the Contractor was or should have been aware, may be considered a material breach of this contract.

IX. The following steps, or as many as are necessary to resolve the dispute between the Department and the Contractor, are prescribed.

The Contractor specifically agrees to submit, in the first instance, any dispute relating to this contract to the designated individual, who shall render a written decision and furnish a copy thereof to the Contractor and the Department. The Contractor must request such decision in writing no more than fifteen days after it knew or should have known of the facts which are the basis of the dispute. The decision of the designated individual shall be final and conclusive unless the Contractor files a written appeal of that decision with the designated appeal individual within twenty days of receipt of that decision.

The designated appeal individual shall review the record and the decision and confirm or reverse the initial decision in writing, in accordance with the Divisional contract resolution procedures in effect at that time.

The decision of the designated appeal individual shall be final and conclusive unless the Contractor files a written appeal of that decision with the Chair of the Contract Review Committee within twenty days of receipt of that decision.

The designated individual to hear disputes is:

_____
(Name and Title)

_____
(Address)

_____
(Telephone)

The designated appeal individual to review decisions made regarding disputes is:

_____
(Name and Title)

_____
(Address)

_____
(Telephone)

The Chair of the Contract Review Committee is:

Department of Environmental Conservation
Richard K. Randles, Chair
Contract Review Committee
50 Wolf Road, Room 674
Albany, NY 12233-5010
Telephone: (518) 457-1141

The Chair of the Contract Review Committee shall convene a fact-finding proceeding in accordance with the Committee's established contract dispute resolution guidelines. The proceeding will provide the Contractor with an opportunity to be heard and to submit additional written support of its position. The Committee shall make a recommendation to the Division Director who shall render the agency determination, subject to the final approval of the Deputy Commissioner for Administration.

This decision shall be subject to review only pursuant to Article 78 of the Civil Practice Law and Rules. Pending final determination of a dispute hereunder, the Contractor shall proceed diligently with the performance of the Contract in accordance with the decision of the designated individual. Nothing in this Contract shall be construed as making final the decision of any administrative officer upon a question of law.

Notwithstanding the foregoing, the following shall be subject to review by the Contract Review Committee, at the option of the Contractor: Disputes arising under Article 15-A of the Executive Law (Minority and Women Owned Business participation), the Department's determination with respect to the adequacy of the Contractor's Utilization Plan, or the Contractor's showing of good faith efforts to comply therewith. A request for a hearing before the Committee should be made, in writing, within twenty days of receipt of the Department's determination.

The Committee will promptly convene a hearing in accordance with Article 15-A of the Executive Law and the regulations promulgated thereunder.

The decision of the Deputy Commissioner for Administration shall be a final agency determination, reviewable in accordance with said Article 78 of the Civil Practice Law and Rules.

X. (a) When appropriate, the Contractor shall post, in a location designated by the Department, a copy of the New York State Department of Labor schedules of prevailing wages and supplements for this project, a copy of all re-determinations of such schedules for the project, the Workers' Compensation Law Section 51 notice, all other notices required by law to be posted at the site, the Department of Labor notice that this project is a public work project on which each worker is entitled to receive the prevailing wages and supplements for their occupation, and all other notices which the Department directs the Contractor to post. The Contractor shall provide a surface for such notices which is satisfactory to the Department. The Contractor shall maintain such notices in a legible manner and shall replace any notice or schedule which is damaged, defaced, illegible or removed for any reason. Contractor shall post such notices before commencing any work on the site and shall maintain such notices until all work on the site is complete.

(b) When appropriate, contractor shall distribute to each worker for this Contract a notice, in a form provided by the Department, that this project is a public work project on which each worker is entitled to receive the prevailing wage and supplements for the occupation at which he or she is working. Worker includes employees of Contractor and all Subcontractors and all employees of suppliers entering the site. Such notice shall be distributed to each worker before they start performing any work of this contract. At the time of distribution, Contractor shall have each worker sign a statement, in a form provided by the Department, certifying that the worker has received the notice required by this section, which signed statement shall be maintained with the payroll records required by the following paragraph (c).

(c) Contractor shall maintain on the site the original certified payrolls or certified transcripts thereof which Contractor and all of its Subcontractors are required to maintain pursuant to the New York Labor Law Section 220. Contractor shall maintain with the payrolls or transcripts thereof, the statements signed by each worker pursuant to paragraph (b).

XI. In accordance with State Law (Chapter 55 of the Laws of 1992), the Department has the authority to administratively offset any monies due it from the Contractor, from payments due to the Contractor under this contract.

XII. The contractor agrees that if selected as the lowest bidder, the contractor will stipulate concerning adherence to the MacBride Fair Employment Principles, as prescribed by Chapter 807, of the Laws of 1992. Section 174-B of the State Finance Law requires that before entering into certain State contracts, persons or entities stipulate that they either (1) have no business operations in Northern Ireland or (2), if so engaged, will conduct such operations in accordance with the MacBride Fair Employment Principles.

For contracts competitively bid, if the lowest responsible bidder fails to stipulate as required by Section 174-B, and another bidder, whose bid price for goods, services or construction of comparable quality is within five percent of the lowest bid, has so stipulated, the contracting entity shall refer such bids to the Office of General Services. The purpose of such referral is a determination by the Commissioner of General Services whether it is in the best interests of the State to reject the low bid and to award the contract to another qualifying bidder.

XIII. Pursuant to Section 167-B of the State Finance Law, unless otherwise exempted, any bid, proposal or other response to a solicitation for bid or proposal which proposes or calls for the use of any tropical hardwood or other tropical wood product in performance of the contract shall be deemed non-responsive.

XIV. In the event of a conflict between the terms of this Appendix E and the terms of the Contract (including any and all attachments thereto and amendments thereof, but not including Appendix D), the terms of this Appendix E shall control. In the event of a conflict between the terms of this Appendix E and Appendix D, the terms of Appendix D shall control.

RIDER TO APPENDIX E
STANDARD CLAUSES FOR ALL NEW YORK STATE DEPARTMENT OF ENVIRONMENTAL CONSERVATION CONTRACTS

The parties to this contract hereby agree that clause II of this Appendix E is hereby revised to read as follows:

II. The Contractor agrees that it will indemnify and save harmless the Department and the State of New York from and against all losses from claims, demands, payments, suits, actions, recoveries and judgments, of every nature and, description brought or recovered against it by reason of any acts or omissions of the Contractor, its agents, employees, or subcontractors in the performance of this contract which are shown to have been the result of negligence, gross negligence or reckless, wanton or intentional misconduct.

Revised January 1996

APPENDIX F

TABLE OF CONTENTS

Page

ARTICLE 1 - PREAMBLE 1

SECTION 1. PARTIES TO THE AGREEMENT 2

ARTICLE 2 - GENERAL CONDITIONS 3

SECTION 1. DEFINITIONS 3

SECTION 2. CONDITIONS FOR AGREEMENT TO BECOME EFFECTIVE 4

SECTION 3. ENTITIES BOUND & ADMINISTRATION OF AGREEMENT 4

SECTION 4. SUPREMACY CLAUSE 4

SECTION 5. LIABILITY 5

SECTION 6. THE COUNTY 5

SECTION 7. AVAILABILITY AND APPLICABILITY TO ALL SUCCESSFUL BIDDERS 6

ARTICLE 3 - SCOPE OF THE AGREEMENT 6

SECTION 1. THE WORK 6

SECTION 2. TIME LIMITATIONS 9

SECTION 3. EXCLUDED EMPLOYEES 10

SECTION 4. NON-APPLICATION TO CERTAIN ENTITIES 12

ARTICLE 4 - UNION RECOGNITION AND EMPLOYMENT 12

SECTION 1. PRE-HIRE RECOGNITION 12

SECTION 2. UNION REFERRAL 13

SECTION 3. NON-DISCRIMINATION IN REFERRALS 14

SECTION 4. MINORITY AND FEMALE REFERRALS 15

SECTION 5. CROSS AND QUALIFIED REFERRALS 15

SECTION 6. UNION DUES 15

SECTION 7. CRAFT FOREPERSONS AND GENERAL FOREPERSONS 16

ARTICLE 5 - UNION REPRESENTATION 16

SECTION 1. LOCAL UNION REPRESENTATIVE 16

SECTION 2. STEWARDS 17

SECTION 3. LAYOFF OF A STEWARD 17

ARTICLE 6 - MANAGEMENT'S RIGHTS 18

SECTION 1. RESERVATION OF RIGHTS 18

SECTION 2. MATERIALS, METHODS & EQUIPMENT 18

ARTICLE 7 - WORK STOPPAGES AND LOCKOUTS 19

SECTION 1. NO STRIKES-NO LOCK OUT 19

SECTION 2. DISCHARGE FOR VIOLATION 20

SECTION 3. NOTIFICATION 20

SECTION 4. EXPEDITED ARBITRATION 20

SECTION 5. ARBITRATION OF DISCHARGES FOR VIOLATION 23

ARTICLE 8 - LABOR MANAGEMENT COMMITTEE 24

SECTION 1. SUBJECTS 24

SECTION 2. COMPOSITION 24

ARTICLE 9 - GRIEVANCE & ARBITRATION PROCEDURE 24

SECTION 1. PROCEDURE FOR RESOLUTION OF GRIEVANCES 24

SECTION 2. LIMITATION AS TO RETROACTIVITY 27

SECTION 3. PARTICIPATION BY CONSTRUCTION PROJECT MANAGER 27

ARTICLE 10 - JURISDICTIONAL DISPUTES 28

SECTION 1. NO DISRUPTIONS 28

SECTION 2. ASSIGNMENT 28

SECTION 3. PROCEDURE FOR SETTLEMENT OF DISPUTES 28

SECTION 4. AWARD 29

SECTION 5. LIMITATIONS 29

SECTION 6. NO INTERFERENCE WITH WORK 29

ARTICLE 11 - WAGES AND BENEFITS 30

SECTION 1. CLASSIFICATION AND BASE HOURLY RATE 30

SECTION 2. EMPLOYEE BENEFITS/SUPPLEMENTS 30

ARTICLE 12 - HOURS OF WORK, PREMIUM PAYMENTS, SHIFTS AND HOLIDAYS 32

SECTION 1. WORK WEEK AND WORK DAY 32

SECTION 2. OVERTIME/PREMIUM PAY 33

SECTION 3. SHIFTS 34

SECTION 4. HOLIDAYS 34
SECTION 5. REPORTING PAY 35
SECTION 6. PAYMENT OF WAGES 36
SECTION 7. EMERGENCY WORK SUSPENSION 36
SECTION 8. INJURY/DISABILITY 37
SECTION 9. TIME KEEPING 37
SECTION 10. MEAL PERIOD 37
SECTION 11. BREAK PERIODS 37
ARTICLE 13 - APPRENTICES 38
SECTION 1. RATIOS 38
SECTION 2. DEPARTMENT OF LABOR 38
ARTICLE 14 - SAFETY PROTECTION OF PERSON AND PROPERTY 39
SECTION 1. SAFETY REQUIREMENTS 39
SECTION 2. CONTRACTOR RULES 39
SECTION 3. INSPECTIONS 40
ARTICLE 15 - NO DISCRIMINATION 40
SECTION 1. COOPERATIVE EFFORTS 40
SECTION 2. LANGUAGE OF AGREEMENT 40
ARTICLE 16 - GENERAL TERMS 41
SECTION 1. PROJECT RULES 41
SECTION 2. TOOLS OF THE TRADE 41
SECTION 3. SUPERVISION 41

SECTION 4. TRAVEL ALLOWANCES 42

SECTION 5. FULL WORK DAY 42

ARTICLE 17 - COOPERATION

SECTION 1. COOPERATION 43

ARTICLE 18 - SAVINGS AND SEPARABILITY 43

SECTION 1. THIS AGREEMENT 43

SECTION 2. THE BID SPECIFICATIONS 43

SECTION 3. NON-LIABILITY 44

SECTION 4. NON-WAIVER 44

ARTICLE 19 - FUTURE CHANGES IN SCHEDULE A AREA CONTRACTS 44

SECTION 1. CHANGES TO AREA CONTRACTS 44

SECTION 2. LABOR DISPUTES DURING AREA CONTRACT NEGOTIATIONS 45

ARTICLE 20 - WORKERS' COMPENSATION ADR 46

PROJECT LABOR AGREEMENT COVERING THE ACJ

LAKE IMPROVEMENT PROJECT

ARTICLE 1 - PREAMBLE

WHEREAS, CAMP DRESSER & McKEE/C&S ENGINEERS INC., A JOINT VENTURE on behalf of itself, as Construction Project Manager, and reflecting the objectives of the County of Onondaga as owner of ACJ Lake Improvement Project, desires to provide for the efficient, safe, quality, and timely completion of a construction project relating to the environmental clean-up of Onondaga Lake in a manner designed to afford the lowest reasonable costs to the County, and the Public it represents, and the advancement of permissible statutory objectives;

WHEREAS, this Project Labor Agreement will foster the achievement of these goals, inter alia, by:

(1) providing a mechanism for achieving the most cost efficient means of construction including direct labor cost savings;

(2) avoiding the costly delays of potential strikes, slowdowns, walkouts, picketing and other disruptions arising from work disputes and promote labor harmony and peace for the duration of the Project;

(3) standardizing the terms and conditions governing the employment of labor on the Project;

(4) permitting wide flexibility in work scheduling and shift hours and times;

(5) providing comprehensive and standardized mechanisms for the settlement of work disputes, including those relating to jurisdiction;

(6) furthering public policy objectives as to improved employment opportunities for minorities, women and the economically disadvantaged in the construction industry;

(7) ensuring a reliable source of skilled and experienced labor;

(8) expediting the construction process, enhancing the County's ability to keep existing sewage facilities functional, and otherwise minimizing public inconveniences relating to that construction;

and, WHEREAS, the signatory Unions desire the stability, security and work opportunities afforded by a Project Labor Agreement;

and, WHEREAS, the Parties desire to maximize Project safety conditions relating to the Project;

NOW, THEREFORE, the Parties enter into this Agreement:

SECTION 1. PARTIES TO THE AGREEMENT

This is a Project Labor Agreement ("Agreement") entered into by and between CAMP DRESSER & McKEE/C&S ENGINEERS INC., A JOINT VENTURE and its successors and assigns, on its own behalf as the Construction Project Manager for certain construction and renovation work to be performed as part of ACJ Lake Improvement Project, and by the Building and Construction Trades Department, AFL-CIO, on behalf of itself; the New York State Building and Construction Trades Council, AFL-CIO on behalf of itself and its affiliates and local union members; the Syracuse Building and Construction Trades Council, AFL-CIO, on behalf of itself and its affiliated local union members; and the signatory Local Unions on behalf of themselves and their members.

ARTICLE 2 - GENERAL CONDITIONS

SECTION 1. DEFINITIONS

Throughout this Agreement, the Union parties and the signatory Local Unions and Council are referred to singularly and collectively as "Union(s)"; where specific reference is made to "Local Unions", that phrase is sometimes used; the term "Contractor(s)" shall include the Construction Project Manager and all signatory contractors, and their subcontractors of whatever tier, engaged in on-site Project construction work within the scope of this Agreement as defined in Article 3; CAMP DRESSER & McKEE/C&S ENGINEERS INC., A JOINT VENTURE, or any successor to whom it may assign this Agreement, is referred to as the "Construction Project Manager"; the County of Onondaga is referenced as the "County"; the Building and Construction Trades Department, AFL-CIO is referenced as the "Department"; the New York State Building and Construction Trades Council, AFL-CIO is referenced as the "NYS Council"; the Syracuse Building and Construction Trades Council, AFL-CIO is referenced as the "Syracuse Council," and the work covered by this Agreement (as defined in Article 3) is referred to as the "Project".

Wherever in this Agreement the Construction Project Manager is authorized or permitted to take any action, such action may be taken by either the Construction Project Manager or its designee.

SECTION 2. CONDITIONS FOR AGREEMENT TO BECOME EFFECTIVE

This Agreement shall not become effective unless each of the following conditions are met: (1) the Agreement is signed by the AFL-CIO Building and Construction Trades Department, NYS and the Syracuse Councils, and the Local Unions having jurisdiction over the Project work; (2) the Agreement is signed by the Construction Project Manager; and (3) the Agreement is approved by the County Executive and the County Legislature.

SECTION 3. ENTITIES BOUND & ADMINISTRATION OF AGREEMENT

This Agreement shall be binding on all signatory Unions, and their affiliates and the Construction Project Manager and all signatory Contractors performing on-site Project work as defined in Article 3. The Contractors shall include in any subcontract that they let for performance during the term of this Agreement, a requirement that their subcontractors, of whatever tier, become signatory and bound by this Agreement with respect to subcontracted work performed within the scope of Article 3. This Agreement shall be administered by the Construction Project Manager, on behalf of all Contractors.

SECTION 4. SUPREMACY CLAUSE

This Agreement, together with the local Collective Bargaining Agreements appended hereto as Schedule A, represents the complete understanding of all signatories and supersedes any national agreement, local agreement or other collective bargaining agreement of any type which would otherwise apply to this Project, in whole or in part. Where a subject covered by the provisions, explicit or implicit, of this Agreement is also covered by a provision

in Schedule A, the provisions of this Agreement shall prevail. It is further understood that no Contractor shall be required to sign any other labor agreement as a condition of performing work on this Project. No practice, understanding or agreement between a Contractor and a Local Union which is not explicitly set forth in this Agreement shall be binding on this Project unless endorsed in writing by the Construction Project Manager.

SECTION 5. LIABILITY

The liability of any Contractor and the liability of any Union under this Agreement shall be several and not joint. The Construction Project Manager and any Contractor shall not be liable for any violations of this Agreement by any other Contractor; and the Department, NYS and Syracuse Councils and Local Unions shall not be liable for any violations of this Agreement by any other Union.

SECTION 6. THE COUNTY

The County shall require in its bid specifications for all work within the scope of Article 3 that all successful bidders, and their subcontractors of whatever tier, become bound by, and signatory to, this Agreement. The County is not a party to this Agreement and shall not be liable in any manner under this Agreement. It is understood that nothing in this Agreement shall be construed as limiting the sole discretion of the County in determining which Contractors shall be awarded contracts for Project work. It is further understood that the County has sole discretion at any time to terminate, delay or suspend the work, in whole or part, on this Project, or to undertake any of the work itself, without regard to this Agreement.

SECTION 7. AVAILABILITY AND APPLICABILITY TO ALL SUCCESSFUL BIDDERS

The Unions agree that this Agreement will be made available to, and will fully apply to any successful bidder for Project work who becomes signatory thereto, without regard to whether that successful bidder performs work at other sites on either a union or non-union basis and without regard to whether employees of such successful bidder are, or are not, members of any unions. This Agreement shall not apply to the work of any Contractor which is performed at any location other than the Project site, as defined in Article 3, Section 1.

ARTICLE 3 - SCOPE OF THE AGREEMENT

The Project work covered by this Agreement shall be as defined and limited by the following sections of this Article.

SECTION 1: THE WORK

This Agreement shall only apply to that on-site work expressly designated by the County in its bid specifications as work performed pursuant to the Amended Consent Judgment ("ACJ"), including any amendments and/or modifications thereto, entered in the matter of Atlantic States Legal Foundation, et al. v. The Onondaga County Department of Drainage and Sanitation and Onondaga County, 88-CV-0066 (N.D.N.Y.). Covered work will be designated "ACJ Construction Work." The parties understand that the unique nature of this Project precludes a fixed definition of the scope of construction at this time, and that scope may be

subject to change as early stages of this work progress, as circumstances change, or in the event of a modification in the ACJ. Without restricting the County's right to designate, or not designate, work as ACJ Construction Work, the parties understand that generally included within covered work will be the following work performed on-site (the site of each component will be as defined by the limits of work contained in the bid specifications for that component):

Treatment Plants Project Descriptions

1. Full Scale Ammonia Removal Project;

2. Phosphorous Removal/Effluent Filtration Project;

3. Digester Modifications and Mechanical Sludge Thickening Improvements;

4. Permanent Support Facilities for Phosphorus Removal;

CSO Projects:

1. Midland Avenue Conveyances Project;

2. Midland Avenue Regional Treatment Facility ("RTF") Project;

3. Clinton Conveyance Project;

4. Clinton RTF Project;

5. Franklin Floatables Control Facility and Conveyances Project;

6. Maltbie Street Floatables Control Facility;

7. Sewer Separation for Sewers: 022, 024, 037, 038, 040, 045, 046A, 046B, 048, 050, 051, 053, 054, 057, 058, and 059.

8. Harbor Brook In-Water System;

9. EBSS Storage Upgrade;

10. Kirkpatrick Street Pumping Station Upgrade;

11. Onondaga Creek Floatables Control Facility (Boom with Collection Structure);

12. Harbor Brook Floatables Control Facility (FCF);

13. Teall Brook FCF.

To the extent there is any conflict between the above general description and the County's express designation (or the absence of any designation) in its bid specifications of work as ACJ Construction Work, the County's express designation (or absence of designation) shall be controlling and determinative of whether work is within the scope of this Agreement. Work not receiving the County's designation as ACJ Construction Work in its bid specifications is not covered under this Agreement.

Specifically excluded from coverage under this Agreement is all work relating to bids solicited prior to the execution of this Agreement by the paries and/or approval of it by the County Executive and County Legislature, maintenance and repair work performed in the normal course of County operations, any work to be completed by the County or any of its operating contractors, and off-site work of any kind.

SECTION 2. TIME LIMITATIONS

This Agreement shall be limited to Project work performed under County construction contracts which are both bid and awarded after the effective date of this Agreement and performed prior to the December 31, 2010, termination date of this Agreement. This Agreement, together with all of its provisions, shall remain in effect for the foregoing Project work even if not completed by December 31, 2010. If the Project work described above is not bid and awarded by December 31, 2010, this Agreement may be extended by mutual agreement of the parties.

SECTION 3. EXCLUDED EMPLOYEES

The following persons are not subject to the provisions of this Agreement, even though performing work on the Project:

a. Superintendents, supervisors (excluding general and forepersons specifically covered by a craft's Schedule A), engineers, inspectors and testers, quality control/ assurance personnel, timekeepers, mail carriers, clerks, office workers, messengers, guards, technicians, non-manual employees, and all professional, engineering, administrative and management persons;

b. Employees of the County, or of any State agency, authority or entity or employees of any municipality or other public employer or employees of any operations contractor (or any successor to it) employed by the County;

c. Employees and entities engaged in off-site manufacture, modifications, repair, maintenance, assembly, painting, handling or fabrication of project components, materials, equipment or machinery or involved in deliveries to and from the Project site;

d. Employees of the Construction Project Manager, excepting those performing manual, on-site construction labor who will be covered by this Agreement;

e. Employees of equipment suppliers performing or assisting in on-site equipment installation and employees engaged in on-site equipment warranty work;

f. Employees engaged in geophysical testing;

g. Employees engaged in laboratory, specialty testing, inspections, or surveying pursuant to a professional services agreement between the County, the Construction Project Manager, or any of the County's other professional consultants, and such laboratory, testing, inspection or surveying firm (individuals engaged in on-site surveying as direct hires of a signatory contractor, rather than pursuant to a professional services contract with the County, the Construction Project Manager or any of the County's other professional consultants, are covered by this Agreement);

h. Employees engaged in ancillary Project work performed by third parties such as electric utilities, gas utilities, telephone companies, and railroads.

SECTION 4. NON-APPLICATION TO CERTAIN ENTITIES

This Agreement shall not apply to the parents, affiliates, subsidiaries, or other joint or sole ventures of any Contractor which do not perform work at this Project. It is agreed, for the purposes of this Agreement only, that this Agreement does not have the effect of creating

any joint employment, single employer or alter ego status among the County, the Construction Project Manager and/or any Contractor. The Agreement shall not apply to the County or any state agency, authority, or other municipal or public entity and nothing contained herein shall be construed to prohibit or restrict the County or its employees or any county or state authority, agency or entity and its employees from performing on or off-site work related to the Project. As the contracts which comprise the Project work are completed and accepted, the Agreement shall not have further force or effect on such items or areas except where inspections, additions, repairs, modifications, check-out and/or warranty work are assigned in writing (copy to Local Union involved) by the Construction Project Manager for explicit performance under the terms of this Agreement.

ARTICLE 4 - UNION RECOGNITION AND EMPLOYMENT

SECTION 1. PRE-HIRE RECOGNITION

The Contractors recognize the signatory Unions as the sole and exclusive bargaining representatives of all craft employees who are performing on-site Project work within the scope of this Agreement as defined in Article 3.

SECTION 2. UNION REFERRAL

A. The Contractors agree to hire Project craft employees covered by this Agreement through the job referral systems and hiring halls (where the referrals meet the qualifications set forth in items 1, 2 and 4 of subparagraph B) established in the Local Unions'

area collective bargaining agreements (attached as Schedule A to this Agreement). Notwithstanding this, the Contractors shall have sole right to determine the competency of all referrals; the number of employees required; the selection of employees to be laid-off (except as provided in Article 5, Section 3); and the sole right to reject any applicant referred by a Local Union, subject to any required show-up allowance. In the event that a Local Union is unable to fill any request for qualified employees within a 48-hour period after such requisition is made by the Contractor (Saturdays, Sundays and holidays excepted), the Contractor may employ qualified applicants from any other available source. In the event that the Local Union does not have a job referral system, the Contractor shall give the Local Union first preference to refer applicants, subject to the other provisions of this Article. The Contractor shall notify the Local Union of Project craft employees hired within its jurisdiction from any source other than referral by the Union.

B. A Contractor may request by name, and the Local must honor, referral of persons who have applied to the Local for Project work and who meet the following qualifications:

(1) possess any license required by NYS law for the Project work to be performed;

(2) have worked a total of at least 1000 hours in the Construction craft during the prior 3 years;

(3) were on the Contractor's active payroll for at least 60 out of the 270 calendar days prior to the contract award;

(4) have the ability to safely perform the basic functions of the applicable trade.

No more than 25 per centum of the employees covered by this Agreement, per Contractor by craft, shall be hired through the special provisions above (any fraction shall be rounded to the next highest whole number). Craft forepersons and/or general forepersons may be included in this 25 per cent. If requested by the appropriate Union, a Contractor utilizing this provision for by-name referrals will furnish the Union with a written certification that the individuals requested for referral meet the requirements of (1) - (4) above.

SECTION 3. NON-DISCRIMINATION IN REFERRALS

The Local Unions represent that their hiring halls and referral systems will be operated in a non-discriminatory manner and in full compliance with all applicable federal, state and local laws and regulations which require equal employment opportunities. Referrals shall not be affected in any way by the rules, regulations, bylaws, constitutional provisions or any other aspects or obligations of union membership, policies or requirements and shall be subject to such other conditions as are established in this Article. No employment applicant shall be discriminated against by any referral system or hiring hall because of the applicant's union membership, or lack thereof.

SECTION 4. MINORITY AND FEMALE REFERRALS

In the event a Local Union either fails, or is unable, to refer qualified minority or female applicants in percentages equaling Project affirmative action goals as set forth in the County's bid specifications, the Contractor may employ qualified minority or female applicants from any other available source.

SECTION 5. CROSS AND QUALIFIED REFERRALS

The Local Unions shall not knowingly refer to a Contractor an employee then employed by another Contractor working under this Agreement. The Local Unions will exert their utmost efforts to recruit sufficient numbers of skilled and qualified crafts employees to fulfill the requirements of the Contractor.

SECTION 6. UNION DUES

All employees covered by this Agreement shall be subject to the union security provisions contained in the applicable Schedule A local agreements, as amended from time to time, but only for the period of time during which they are performing on-site Project work and only to the extent of tendering payment of the applicable union dues uniformly required for union membership in the Local Union, signatory to this Agreement, which represents the craft in which the employee is performing Project work. No employee shall be discriminated against at the Project site because of the employee's union membership or lack thereof. In the case of unaffiliated employees, the dues payment will be received by the Unions as an agency shop fee.

SECTION 7. CRAFT FOREPERSONS AND GENERAL FOREPERSONS

The selection of craft forepersons and/or general forepersons and the number of forepersons required shall be solely the responsibility of the Contractor. All forepersons shall take orders exclusively from the designated Contractor representatives. All forepersons shall be designated as working forepersons at the request of the Contractor.

ARTICLE 5 - UNION REPRESENTATION

SECTION 1. LOCAL UNION REPRESENTATIVE

Each Local Union signatory to this Agreement shall be entitled to designate in writing (copy to Contractor involved and Construction Project Manager) one representative, and/or the Business Manager, who shall be afforded reasonable access to the Project.

SECTION 2. STEWARDS

(a) Each Local Union shall have the right to designate one working journeyperson as a Steward and one alternate for each Contractor, and shall notify the Contractor and Construction Project Manager of the identity of the designated Steward (and alternate) prior to the assumption of such duties. Stewards shall not exercise supervisory functions and will receive the regular rate of pay for their craft classifications. There will be no non-working Stewards on the Project.

(b) In addition to their work as an employee, the Steward shall have the right to receive complaints or grievances and to discuss and assist in their adjustment with the Contractor's appropriate supervisor. Each Steward shall be concerned with the employees of the Steward's Contractor and, if applicable, subcontractors of that Contractor, but not with the employees of any other Contractor. The Contractor will not discriminate against the Steward in the proper performance of Union duties.

(c) The Stewards shall not have the right to determine when overtime shall be worked or who shall work overtime.

SECTION 3. LAYOFF OF A STEWARD

Contractors agree to notify the appropriate Union 24 hours prior to the layoff of a Steward, except in cases of discipline or discharge for just cause. If a Steward is protected against layoff by a Schedule A, such provisions shall be recognized to the extent the Steward possesses the necessary qualifications to perform the work required. In any case in which a Steward is discharged or disciplined for just cause, the Local Union involved shall be notified immediately by the Contractor.

ARTICLE 6 - MANAGEMENT'S RIGHTS

SECTION 1. RESERVATION OF RIGHTS

Except as expressly limited by a specific provision of this Agreement, Contractors retain full and exclusive authority for the management of their Project operations including, but not limited to: the right to direct the work force, including determination as to the number to be hired and the qualifications therefore; the promotion, transfer, layoff of its employees; or the discipline or discharge for just cause of its employees; the assignment and schedule of work; the promulgation of reasonable Project work rules; and, the requirement, timing and number of employees to be utilized for overtime work. No rules, customs, or practices which limit or restrict productivity or efficiency of the individual (as determined by the Contractor or Construction Project Manager) and/or joint working efforts with other employees shall be permitted or observed.

SECTION 2. MATERIALS, METHODS & EQUIPMENT

There shall be no limitation or restriction upon the Contractors' choice of materials, techniques, methods, technology or design, or, regardless of source or location, upon the use and installation of equipment, machinery, package units, pre-cast, pre-fabricated, pre-finished, or pre-assembled materials, tools, or other labor-saving devices. Contractors may, without restriction, install or use materials, supplies or equipment regardless of their source. Except as provided in Article 3, Section 3, the on-site installation or application of such items shall be performed by the craft having jurisdiction over such work; provided, however, it is recognized that other personnel having special qualifications may participate, in a supervisory capacity, in the installation, check-off or testing of specialized or unusual equipment or facilities as designated by the Contractor. There shall be no restrictions as to work which is performed off-site for the Project except as may be imposed by law.

ARTICLE 7 - WORK STOPPAGES AND LOCKOUTS

SECTION 1. NO STRIKES-NO LOCK OUT

There shall be no strikes, sympathy strikes, picketing, work stoppages, slowdowns, hand billing, demonstrations or other disruptive activity at or in proximity to any Project site for any reason by any Union or employee against any Contractor or employer while performing work at the Project. There shall be no other Union, or concerted or employee activity which disrupts or interferes with the operation of any County facility. Failure of any Union or employee to cross any picket line established by any union, signatory or non-signatory to this

Agreement, or the picket or demonstration line of any other organization, at or in proximity to any Project site is a violation of this Article. There shall be no lockout at the Project by any signatory Contractor. Contractors and Unions shall take all steps necessary to ensure compliance with this Section 1 and to ensure uninterrupted construction, the free flow of traffic in, out and around Project sites, and unimpeded operation of County facilities for the duration of this Agreement.

SECTION 2. DISCHARGE FOR VIOLATION

A Contractor may discharge any employee violating Section 1, above, and any such employee will not be eligible thereafter for referral under this Agreement for a period of 100 working days.

SECTION 3. NOTIFICATION

If a Contractor contends that any Union has violated this Article, it will notify the Syracuse Council of the Local Union involved, with copies of the notification to the Local Union, the Department and the NYS Council. The Syracuse Council, and the Department, and the NYS Council shall each instruct, order and otherwise use their best efforts to cause the employees, and/or the Local Unions to immediately cease and desist from any violation of this Article. If the Syracuse Council, the NYS Council and the Department comply with these obligations, they shall not be liable for the unauthorized acts of a Local Union or its members.

SECTION 4. EXPEDITED ARBITRATION

Any Contractor or Union alleging a violation of Section 1 of this Article may utilize the expedited procedure set forth below (in lieu of, or in addition to, any actions at law or equity) that may be brought.

a. A party invoking this procedure shall notify Robert Rabin, Jeffery Selchick, Shiela Cole, or Thomas Rinaldo who shall alternate as Arbitrator under this expedited arbitration procedure. If the Arbitrator next on the list is not available to hear the matter within 48 hours of notice, the next Arbitrator on the list shall be called. Copies of such notification will be simultaneously sent to the alleged violator and, if a Local Union is alleged to be in violation, its International affiliate, the Department, the Syracuse Council, and the Construction Project Manager.

b. The Arbitrator shall thereupon, after notice as to time and place to the Contractor, the Local Union involved, the Council and the Construction Project Manager, hold a hearing within 48 hours of receipt (excluding Sundays and holidays) of the notice invoking the procedure if it is contended that the violation still exists. The hearing will not, however, be scheduled for less than 24 hours (excluding Sundays and holidays) after the notice required by Section 3, above.

c. All notices pursuant to this Article may be by telephone, telegraph, hand delivery, or fax, confirmed by overnight delivery, to the Arbitrator, Contractor and Union involved. The hearing may be held on any day including Saturdays or Sundays. The hearing shall be completed in one session, which shall not exceed 8 hours duration (no more than 4 hours being allowed to either side to present their case, and conduct their cross examination) unless otherwise agreed. A failure of any Union or Contractor to attend the hearing shall not delay the hearing of evidence by those present or the issuance of an award by the Arbitrator.

d. The sole issue at the hearing shall be whether a violation of Section 1, above, occurred. If a violation is found to have occurred, the Arbitrator shall issue a Cease and Desist Award restraining such violation and serve copies on the Contractor and Union involved. The Arbitrator shall have no authority to consider any matter in justification, explanation or mitigation of such violation or to award damages, which issue is reserved solely for court proceedings, if any. The Award shall be issued in writing within 3 hours after the close of the hearing, and may be issued without an Opinion. If any involved party desires an Opinion, one shall be issued within 15 calendar days, but its issuance shall not delay compliance with, or enforcement of, the Award.

e. An Award issued under this procedure may be enforced by any court of competent jurisdiction upon the filing of this Agreement together with the Award. Notice of the filing of such enforcement proceedings shall be given to the Union and Contractor involved. In any court proceeding to obtain a temporary or preliminary order enforcing the arbitrator's Award as issued under this expedited procedure, the involved Union and Contractor waive their right to a hearing and agree that such proceedings may be ex parte, provided notice is given to opposing counsel. Such agreement does not waive any party's right to participate in a hearing for a final court order of enforcement or in any contempt proceeding.

f. Any rights created by statute or law governing arbitration proceedings which are inconsistent with the procedure set forth in this Article, or which interfere with compliance thereto, are hereby waived by the Contractors and Unions to whom they accrue.

g. The fees and expenses of the Arbitrator shall be equally divided between the involved Contractor and Union.

SECTION 5. ARBITRATION OF DISCHARGES FOR VIOLATION

Procedures contained in Article 9 shall not be applicable to any alleged violation of this Article, with the single exception that an employee discharged for violation of Section 1,

above, may have recourse to the procedures of Article 9 to determine only if the employee did, in fact, violate the provisions of Section 1 of this Article; but not for the purpose of modifying the discipline imposed where a violation is found to have occurred.

ARTICLE 8 - LABOR MANAGEMENT COMMITTEE

SECTION 1. SUBJECTS

The Project Labor Management Committee will meet on a regular basis to: 1) promote harmonious relations among the Contractors and Unions; 2) enhance safety awareness, cost effectiveness and productivity of construction operations; 3) protect the public interest; 4) discuss matters relating to staffing and scheduling with safety and productivity as considerations; and 5) review Affirmative Action and equal employment opportunity matters pertaining to the Project.

SECTION 2. COMPOSITION

The Committee shall be comprised of designees of the Syracuse Council and the Construction Project Manager, and representatives of the Local Unions and Contractors involved in the issues being discussed. The Committee may elect its own chair. The Committee may conduct business through mutually agreed sub-committees.

ARTICLE 9 - GRIEVANCE & ARBITRATION PROCEDURE

SECTION 1. PROCEDURE FOR RESOLUTION OF GRIEVANCES

Any question, dispute or claim arising out of, or involving the interpretation or application of this Agreement (other than jurisdictional disputes or alleged violations of Article 7, Section 1) shall be considered a grievance and shall be resolved pursuant to the exclusive procedure of the steps described below; provided, in all cases, that the question, dispute or claim arose during the term of this Agreement.

Step 1:

(a) When any employee covered by this Agreement feels aggrieved by a claimed violation of this Agreement, the employee shall, through the Local Union business representative or job steward give notice of the claimed violation to the work site representative of the involved Contractor. To be timely, such notice of the grievance must be given within 14 calendar days after the act, occurrence or event giving rise to the grievance. The business representative of the Local Union or the job steward and the work site representative of the involved Contractor shall meet and endeavor to adjust the matter within 14 calendar days after timely notice has been given. If they fail to resolve the matter within the prescribed period, the grieving party, may, within 14 calendar days thereafter, pursue Step 2 of the grievance procedure by serving the involved Contractor and the Construction Project Manager with written copies of the grievance setting forth a description of the claimed violation, the date on which the grievance occurred, and the provisions of the Agreement alleged to have been violated. Grievances and

disputes settled at Step 1 are nonprecedential except as to the specific Local Union, employee and Contractor directly involved unless the settlement is accepted in writing by the Construction Project Manager as creating a precedent.

(b) Should any signatory to this Agreement have a dispute (excepting jurisdictional disputes or alleged violations of Article 7, Section 1) with any other signatory to this Agreement and, if after conferring, a settlement is not reached within 14 calendar days, the dispute shall be reduced to writing and proceed to Step 2 in the same manner as outlined in subparagraph (a) for the adjustment of employee grievances.

Step 2:

The Business Manager or designee of the involved Local Union, together with representatives of the Syracuse Council, the involved Contractor, and the Construction Project Manager shall meet in Step 2 within 14 calendar days of service of the written grievance to arrive at a satisfactory settlement.

Step 3:

(a) If the grievance was submitted but not resolved in Step 2, any of the participating Step 2 entities may, within 21 calendar days after the initial Step 2 meeting, submit the grievance in writing (copies to other participants) to Robert Rabin, Jeffery Selchick, Shiela Cole, or Thomas Rinaldo who shall act, alternately, as the Arbitrator under this procedure. The Labor Arbitration Rules of the American Arbitration Association shall govern the conduct of the

arbitration hearing, at which all Step 2 participants shall be parties. The decision of the Arbitrator shall be final and binding on the involved Contractor, Local Union and employees and the fees and expenses of such arbitrations shall be borne equally by the involved Contractor and Local Union.

(b) Failure of the grieving party to adhere to the time limits set forth in this Article shall render the grievance null and void. These time limits may be extended only by written consent of the Construction Project Manager, involved Contractor and involved Local Union at the particular step where the extension is agreed upon. The Arbitrator shall have authority to make decisions only on the issues presented to him and shall not have the authority to change, add to, delete or modify any provision of this Agreement.

SECTION 2. LIMITATION AS TO RETROACTIVITY

No arbitration decision or award may provide retroactivity of any kind prior to the date of service of the grievance under Step 1 or 28 days prior to the date of service of the written grievance on the Construction Project Manager and the involved Contractor or Local Union under Step 2, whichever period is shorter.

SECTION 3. PARTICIPATION BY CONSTRUCTION PROJECT MANAGER

The Construction Project Manager shall be notified by the involved Contractor of all actions at Steps 2 and 3 and, at its election, may participate in full in all proceedings at these Steps, including Step 3 arbitration.

ARTICLE 10 - JURISDICTIONAL DISPUTES

SECTION 1. NO DISRUPTIONS

There will be no strikes, sympathy strikes, work stoppages, slowdowns, picketing or other disruptive activity of any kind arising out of any jurisdictional dispute. Pending the resolution of the dispute, the work shall continue uninterrupted and as assigned by the Contractor. No jurisdictional dispute shall excuse a violation of Article 7.

SECTION 2. ASSIGNMENT

All Project construction work assignments shall be made by the Contractor pursuant to law.

SECTION 3. PROCEDURE FOR SETTLEMENT OF DISPUTES

A. All jurisdictional disputes between or among building and construction trades unions and employers, parties to this Agreement, shall be settled and adjusted according to the present plan established by the Building and Construction Trades Department or any other plan or method of procedure that may be adopted in the future by the Building and Construction Trades Department. Decisions rendered shall be final, binding and conclusive on the employer and union parties to this Agreement.

B. This jurisdictional dispute resolution procedure will only apply to work performed by Local Unions at the Project site.

C. Any Local Union involved in a jurisdictional dispute on this Project shall continue working in accordance with Section 2 above and without disruption of any kind.

SECTION 4. AWARD

Any jurisdictional award shall be final and binding on the disputing Local Unions and the involved Contractor on this Project only, and may be enforced in any court of competent jurisdiction. Such award or resolution shall not establish a precedent on any other construction work not covered by this Agreement.

SECTION 5. LIMITATIONS

The deciding person or group hereunder shall have no authority to assign work to a double crew, that is, to more employees than the minimum required by the Contractor to perform the work involved; nor to assign the work to employees who are not qualified to perform the work involved; nor to assign work being performed by non-union employees to union employees. This does not prohibit the establishment, with the agreement of the involved Contractor, of composite crews where more than 1 employee is needed for the job. The aforesaid determinations shall decide only to whom the disputed work belongs.

SECTION 6. NO INTERFERENCE WITH WORK

There shall be no interference or interruption of any kind with the work of the Project while any jurisdictional dispute is being resolved. The work shall proceed as assigned by the Contractor until finally resolved under the applicable procedure of this Article. The award

shall be confirmed in writing to the involved parties. There shall be no strike, work stoppage or interruption in protest of any such award.

ARTICLE 11 - WAGES AND BENEFITS

SECTION 1. CLASSIFICATION AND BASE HOURLY RATE

Subject to the provisions of this Agreement, all employees covered by this Agreement shall be classified in accordance with the work performed and paid the base, straight time hourly wage rates applicable for those classifications as required by the applicable New York State Labor Law Section 220 prevailing wage determination and applicable Davis-Bacon wage determination. Recognizing, however, that special conditions may exist or occur on the Project, the parties, by mutual agreement may establish rates and/or hours for one or more classifications which may differ from Schedules A and/or the prevailing wage. Parties to such agreements shall be the Construction Project Manager, the Contractor involved, the involved Local Unions and the Council.

SECTION 2. EMPLOYEE BENEFITS/SUPPLEMENTS

A. The Contractors agree to pay employee benefits/supplements on behalf of all of their employees covered by this Agreement in the amounts required by the applicable Section 220 or Davis-Bacon schedule in effect.

Except as provided below and in 2B, the Contractors agree that such payments shall be made to those established jointly trusteed employee benefit funds designated in Schedule

A, and in the amounts so designated, to the extent such payments satisfy the Section 220 obligation. Bona fide jointly trusteed fringe benefit plans established or negotiated through collective bargaining during the life of this Agreement may be added if they similarly fall within Section 220. Contractors shall not be required to contribute to non-Section 220 benefits, trusts or plans. The difference, if any, between the Section 220/Davis-Bacon amount required to be paid and covered Schedule A benefit fund contributions shall be paid to the employee in cash. Under no circumstances is a Contractor required to pay benefits in an amount in excess of Section 220/Davis-Bacon's requirements.

B. Notwithstanding Section 2A, Contractors who designate employees pursuant to Article 4, Section 2 B, and who maintain bona fide private benefit plans which satisfy the requirements of Section 220 of the Labor Law, may satisfy the above benefit obligation with respect to those employees by providing those employees with coverage under their private benefit plans (to the extent consistent with Section 220) or by electing to pay into the applicable jointly trusteed funds designated on Schedule A on their behalf, at the Contractor's option. The total benefit payments to be made by a Contractor on behalf of those employees must equal the total Section 220 supplement amount and any shortfall must be paid by cash supplement to the employee. This same option shall apply with respect to any other employee who is referred to the Contractor through the hiring hall process provided such employee was previously employed by the Contractor and was a participant in a bona fide private benefit plan maintained by the Contractor and which satisfies the requirements of Section 220.

C. Contractors who contribute to jointly trusteed funds under this Section agree to be bound by the written terms of the legally-established jointly trusteed Trust

Agreements specifying the detailed basis on which payments are to be paid into, and benefits paid out of, such Trust Funds but only with regard to work done on this Project and only for those employees to whom this Agreement requires such benefit Payments.

ARTICLE 12 - HOURS OF WORK, PREMIUM PAYMENTS, SHIFTS AND HOLIDAYS

SECTION 1. WORK WEEK AND WORK DAY

A. The standard work week shall consist of 40 hours of work at straight time rates per one of the following schedules:

(1) Five-Day Work Week: Monday - Friday; 5 days, 8 hours plus 1/2 hour unpaid lunch period each day.

(2) Four-Day Work Week: Monday - Thursday; 4 days, 10 hours plus 1/2 hour unpaid lunch period each day.

B. The Day Shift shall commence between the hours of 6:00 a.m. and 9:00 a.m. and shall end between the hours of 2:30 p.m. and 7:30 p.m. Starting and quitting times shall occur at the Project site as designated by the Contractor.

C. Scheduling - The Contractor shall have the option of scheduling either a five-day or four-day work week and work day hours consistent with Project requirements, the Project schedule, and minimization of public inconvenience and County operations. When conditions beyond the control of the Contractor, such as weather, power failure, fire or natural disaster, prevent the performance of Project work on a regularly scheduled work day, the

Contractor may schedule Friday or Saturday (where on 4, 10's) or Saturday (where on 5, 8's) during that calendar week in which a workday was lost, at straight time pay; providing the employees involved have not otherwise worked more than 40 hours during that work week. In the event the employees involved have worked more than 40 hours during that work week they will receive time and one-half pay for the hours in excess of 40.

D. Notice - Contractors shall provide not less than 5 working days prior notice to the Local Union involved as to the work week and work hour schedules (including any changes in the work schedule) to be worked or such lesser notice as may be mutually agreed upon.

SECTION 2. OVERTIME/PREMIUM PAY

Overtime and/or premium pay for hours outside of the standard work week and work day, described in paragraph A above, shall be paid in accordance with the applicable Schedule A, except that overtime/premium pay shall not exceed 1½ times the base rate for any hours worked Monday through Saturday. There will be no restriction upon the Contractor's scheduling of overtime or the non-discriminatory designation of employees who shall be worked. There shall be no pyramiding of overtime/premium pay under any circumstances. The Contractor shall have the right to schedule work so as to minimize overtime. Holiday pay, if any, will be paid in accordance with Article 12, Section 4 below.

SECTION 3. SHIFTS

A. Flexible Schedules - Scheduling of shift work shall remain flexible in order to meet Project schedules and existing Project conditions including the minimization of interference with County operations and public inconvenience. It is not necessary to work a day shift in order to schedule a second or third shift. Shifts must have prior approval of the Construction Project Manager, and must be scheduled with not less than five work days notice to the Local Union.

B. Second/or Third Shifts - The second shift (starting between 2 p.m. and 8 p.m.)and the third shift (starting between 10 p.m. and 2 a.m.) shall be paid a shift differential of 5% and 10%, respectively, with no reduction in hours worked.

C. Flexible Starting Times - Shift starting times will be adjusted by the Contractor as necessary to fulfill Project requirements subject to the notice requirements of paragraph A.

D. Four Tens - When working a four-day work week, the standard work day shall consist of 10 hours work for 10 hours of pay at the straight time rate exclusive of an unpaid 1/2 hour meal period and regardless of the starting time.

SECTION 4. HOLIDAYS

A. Schedule - There shall be 7 recognized holidays on the Project:

New Years Day	Labor Day
Martin Luther King, Jr. Day	Thanksgiving Day
Memorial Day	Christmas Day

Fourth of July

All said holidays shall be observed on the dates designated by New York State Law. In the absence of such designation, they shall be observed on the calendar date except those holidays which occur on Sunday shall be observed on the following Monday.

B. Payment - Regular holiday pay, if any, and/or premium pay for work performed on such a recognized holiday shall be in accordance with the applicable Schedule A.

C. Exclusivity - No holidays other than those listed in Section 4-A above shall be recognized or observed.

SECTION 5. REPORTING PAY

A. Employees who report to the work location pursuant to regular schedule and who are not provided with work or whose work is terminated early by a Contractor, for whatever reason, shall receive, in lieu of reporting or similar pay provided in Schedule A, the greater of an allowance for travel costs equal to one hour's pay or pay for any hours actually worked, but not both. The allowance for travel costs is not to be considered as wages nor is it to be included in the calculation of any benefits.

B. When an employee who has completed their scheduled shift and left the Project site is "called out" to perform special work of a casual, incidental or irregular nature, the employee shall receive pay for actual hours worked with a minimum guarantee, as may be required by the applicable Schedule A, at the employee's straight time rate.

C. When an employee leaves the job or work location of their own volition or is discharged for cause or is not working as a result of the Contractor's invocation of Section 7 below, they shall be paid only for the actual time worked.

D. Except as specifically set forth in this Article there shall be no premiums, bonuses, hazardous duty (unless required under Section 220), high time or other special payments of any kind.

E. There shall be no pay for time not actually worked except as specifically set forth in this Article.

SECTION 6. PAYMENT OF WAGES

A. Payday - Payment shall be made by check, drawn on a New York bank with branches located within commuting distance of the job site. Paychecks shall be issued by the Contractor at the job site by 10 a.m. on Thursdays. In the event that the following Friday is a bank holiday, paychecks shall be issued on Wednesday of that week. Not more than 3 days' wages shall be held back in any pay period. Paycheck stubs shall contain the name and business address of the Contractor, together with an itemization of deductions from gross wages.

B. Termination- Employees who are laid off or discharged for cause shall be paid in full for that which is due them at the time of termination. The Contractor shall also provide the employee with a written statement setting forth the date of lay off or discharge.

SECTION 7: EMERGENCY WORK SUSPENSION

A Contractor may, if considered necessary for the protection of life, property, and/or safety of employees or others, suspend all or a portion of Project work. In such instances, employees will be paid for actual time worked; provided, however, that when a Contractor requests that employees remain at the job site available for work, employees will be paid for "stand-by" time at their hourly rate of pay.

SECTION 8. INJURY/DISABILITY

An employee who, after commencing work, suffers a work-related injury or disability while performing work duties, shall receive no less than 8 hours wages for that day. Further, the employee shall be rehired at such time as able to return to duties provided there is still work available on the Project for which the employee is qualified and able to perform.

SECTION 9. TIME KEEPING

A Contractor may utilize brassing or other systems to check employees in and out. Each employee must check in and out. The Contractor will provide adequate facilities for checking in and out in an expeditious manner.

SECTION 10. MEAL PERIOD

A Contractor shall schedule an unpaid period of not more than 1/2 hour duration at the work location between the 3rd and 5th hour of the scheduled shift. A Contractor may, for efficiency of operation, establish a schedule which coordinates the meal periods of two or more

crafts. If an employee is required to work through the meal period, the employee shall be compensated in a manner established in the applicable Schedule A.

SECTION 11. BREAK PERIODS

There will be no rest periods, organized coffee breaks or other non-working time established during working hours. Individual coffee containers will be permitted at the employee's work location.

ARTICLE 13 - APPRENTICES

SECTION 1. RATIOS

Recognizing the need to maintain continuing supportive programs designed to develop adequate numbers of competent workers in the construction industry and to provide craft entry opportunities for minorities, women and economically disadvantaged non-minority males, Contractors will employ apprentices in their respective crafts to perform such work as is within their capabilities and which is customarily performed by the craft in which they are indentured. Contractors may utilize apprentices and such other appropriate classifications as are contained in the applicable Schedule A in a ratio not to exceed 25% of the work force by craft (without regard to whether a lesser ratio is set forth in Schedule A), unless the applicable Schedules A provide for a higher percentage. Apprentices and such other classifications as are appropriate shall be employed in a manner consistent with the provisions of the appropriate Schedule A.

SECTION 2. DEPARTMENT OF LABOR

To assist the Contractors in attaining a maximum effort on this Project, the Unions agree to work in close cooperation with, and accept monitoring by, the New York State Department of Labor to ensure that minorities and women are afforded every opportunity to participate in apprenticeship programs which result in the placement of apprentices on this Project. To further ensure that this Contractor effort is attained, up to 50% of the apprentices placed on this Project may be first year, minority, women or economically disadvantaged apprentices. The Local Unions will cooperate with Contractor requests for minority, women or economically disadvantaged referrals to meet this Contractor effort.

ARTICLE 14 - SAFETY PROTECTION OF PERSON AND PROPERTY

SECTION 1. SAFETY REQUIREMENTS

Each Contractor will ensure that applicable OSHA and County Safety Program requirements are at all times maintained on the Project and the employees and Unions agree to cooperate fully with these efforts. Employees must perform their work at all times in a safe manner and protect themselves and the property of the Contractor and County from injury or harm. Failure to do so may be grounds for discipline, including discharge.

SECTION 2. CONTRACTOR RULES

Employees covered by this Agreement shall at all times be bound by the reasonable safety, security, and visitor rules as established by the Contractors and the

Construction Project Manager for this Project. Such rules will be published and posted in conspicuous places throughout the Project.

SECTION 3. INSPECTIONS

The Contractors and Construction Project Manager retain the right to inspect incoming shipments of equipment, apparatus, machinery and construction materials of every kind.

ARTICLE 15 - NO DISCRIMINATION

SECTION 1. COOPERATIVE EFFORTS

The Contractors and Unions agree that they will not discriminate against any employee or applicant for employment because of race, color, religion, sex, national origin, marital status, age, union or non-union status, or any other status protected by law, in any manner prohibited by law or regulation. It is recognized that special procedures may be established by Contractors and Local Unions and the New York State Department of Labor for the training and employment of persons who have not previously qualified to be employed on construction projects of the type covered by this Agreement. The parties to this Agreement will assist in such programs and agree to use their best efforts to ensure that the goals for female and minority employment are met on this Project.

SECTION 2. LANGUAGE OF AGREEMENT

The use of the masculine or feminine gender in this Agreement shall be construed as including both genders.

ARTICLE 16 - GENERAL TERMS

SECTION 1. PROJECT RULES

The Construction Project Manager and/or the Contractors shall establish from time to time such reasonable Project rules (which may include pre-hire and post-hire drug testing rules) as are appropriate for the good order of the Project. These rules will be explained at the pre-job conference (if then existing) and posted at the Project site and may be amended thereafter as necessary. Failure of an employee to observe these rules and regulations shall be grounds for discipline, including discharge. The fact that no order was posted prohibiting a certain type of misconduct shall not be a defense to an employee disciplined or discharged for such misconduct when the action taken is for cause.

SECTION 2. TOOLS OF THE TRADE

The welding/cutting torch and chain fall are tools of the trade having jurisdiction over the work performed. Employees using these tools shall perform any of the work of the trade. There shall be no restrictions on the emergency use of any tools or equipment by any qualified employee or on the use of any tools for the performance of work within the employee's jurisdiction.

SECTION 3. SUPERVISION

Employees shall work under the supervision of the craft foreperson or general foreperson.

SECTION 4. TRAVEL ALLOWANCES

There shall be no payments for travel expenses, travel time, parking, subsistence allowance or other such reimbursements or special pay except as expressly set forth in this Agreement.

SECTION 5. FULL WORK DAY

Employees shall be at their work area at the starting time established by the Contractor. The signatories reaffirm their policy of a fair day's work for a fair day's wage.

ARTICLE 17. COOPERATION

SECTION 1. COOPERATION

To the extent permitted by law, the parties intend for the provisions of this Agreement to control in the event of a conflict between this Agreement and any provision of New York State Labor Law. Towards that end, the Construction Project Manager, Contractors and the Unions will cooperate in seeking any NYS Department of Labor approvals that may be required for implementation of any terms of this Agreement.

ARTICLE 18. SAVINGS AND SEPARABILITY

SECTION 1. THIS AGREEMENT

In the event that the application of any provision of this Agreement is enjoined, on either an interlocutory or permanent basis, or otherwise found in violation of law, the provision involved shall be rendered, temporarily or permanently, null and void. In such event, the remainder of the Agreement shall remain in full force and effect, to the extent allowed by law, for contracts already bid and awarded and still in construction provided the Contractor then voluntarily accepts the Agreement. The parties to this Agreement will enter into negotiations for a substitute provision in conformity with the law and the intent of the parties for contracts to be let in the future.

SECTION 2. THE BID SPECIFICATIONS

In the event that the County's bid specifications, or any other action taken by the County, requiring that a successful bidder become signatory to this Agreement is enjoined, on either an interlocutory or permanent basis, or otherwise found in violation of law, then such specification or other action, and with it Article 2, Section 6, shall be rendered, temporarily or permanently, null and void. In such event, this Agreement shall remain in full force and effect to the extent allowed by law for contracts already bid and awarded and still in construction provided the Contractor then voluntarily accepts the Agreement. The parties will enter into negotiations as to modifications to the Agreement to reflect the court action taken and the intent of the parties for contracts to be let in the future.

SECTION 3. NON-LIABILITY

In the event of an occurrence referenced in Section 1 or Section 2 of this Article, neither the County, the Construction Project Manager, any Contractor, nor any signatory Union shall be liable under this Agreement or otherwise, directly or indirectly, for any action taken, or not taken, in order to comply with any court order, injunction or determination. Project bid specifications will be issued in conformance with court orders then in effect and no retroactive payments or other retroactive action will be required if the original court determination is reversed. Contracts shall be awarded on the basis of the specification issued unless those specifications have been enjoined or otherwise ruled unlawful, in which case the award, if any, shall be based on the specification as modified to meet any applicable court order.

SECTION 4. NON-WAIVER

Nothing in this Article shall be construed as waiving the prohibitions of Article 7 as to signatory Contractors and signatory Unions.

ARTICLE 19 - FUTURE CHANGES IN SCHEDULE A AREA CONTRACTS

SECTION 1. CHANGES TO AREA CONTRACTS

A. To the extent applicable to the Project, Schedule A to this Agreement shall continue in effect until the Contractor and/or Union parties to the Area Collective Bargaining Agreements which are the basis for Schedule A notify the Construction Project Manager in writing of the mutually agreed upon changes in provisions of such agreements which are

applicable to the Project, and their effective dates. Such changes, including changes in wage and benefit/supplement rates, shall only be effective to the extent consistent with this Agreement.

B. It is agreed that any provisions negotiated into Schedule A will not apply to work on this Project if such provisions are less favorable to this Project than those uniformly required of contractors for construction work, other than this Project, normally covered by those agreements; nor shall any provision be recognized or applied on this Project if it may be construed to apply exclusively, or predominantly, to work covered by this Project Agreement.

C. Any disagreement between signatories to this Agreement over the incorporation into Schedule A of provisions agreed upon in the renegotiation of Area Collective Bargaining Agreements shall be resolved in accordance with the procedure set forth in Article 9 of this Agreement.

SECTION 2. LABOR DISPUTES DURING AREA CONTRACT NEGOTIATIONS

The Unions agree that there will be no strikes, work stoppages, sympathy actions, picketing, slowdowns or other disruptive activity or other violations of Article 7 affecting the Project by any Local Union involved in the renegotiation of Area Local Collective Bargaining Agreements nor shall there be any lock-out on this Project affecting a Local Union during the course of such renegotiations.

ARTICLE 20 - WORKERS' COMPENSATION ADR

SECTION 1. The parties agree that the Construction Manager may implement a Workers' Compensation Alternative Dispute Resolution program which is consistent with Section 25 (2-C) of the New York Workers' Compensation Law. The final terms of the program shall be determined by the Construction Manager, after consultation with the Union. If the Construction Manager is not satisfied with the cost savings to be generated by such a program, it may, in its discretion, decline to implement, or at any time after implementation decline to continue, that program.

IN WITNESS WHEREOF the parties have caused this Agreement to be executed and effective as of the 16TH day of DECEMBER, 1998.

FOR: CAMP DRESSER & McKEE/C&S ENGINEERS INC., A JOINT VENTURE

BY: Richard D. Fox

Richard D. Fox, P.E.
Principal-in-Charge
Construction Project Manager

FOR THE BUILDING & CONSTRUCTION TRADES

BUILDING AND CONSTRUCTION TRADES DEPARTMENT, AFL-CIO

BY: _____
(Name/Title)

NEW YORK STATE BUILDING TRADES COUNCIL

BY: _____
(Name/Title)

SYRACUSE BUILDING & CONSTRUCTION TRADES COUNCIL

BY: William C. Towsley
(Name/Title)

FOR THE LOCAL UNIONS

INTERNATIONAL ASSOCIATION OF HEAT AND FROST INSULATORS AND ASBESTOS WORKERS, LOCAL NO. 30

BY: Thomas Daniels III Business Manager
(Name/Title)

BOILERMAKERS' UNION LOCAL NO. 175

BY: Jack T. Fultz Business Manager
(Name/Title)

BRICKLAYERS AND ALLIED CRAFT LOCAL NO. 2

BY: Luke P. Brown Field Rep Local 2
(Name/Title)

UNITED BROTHERHOOD OF CARPENTERS AND JOINERS OF AMERICA LOCAL NO. 747

BY: Brian Bridges Council Rep
(Name/Title)

INTERNATIONAL BROTHERHOOD OF ELECTRICAL WORKERS UNION LOCAL NO. 43

BY: William C. Towsley Bus. Mgr.
(Name/Title)

GLAZIERS, ARCHITECTURAL METAL AND GLASS WORKS LOCAL NO. 677

BY: Timothy J. Brown Bus. Rep.
(Name/Title)

INTERNATIONAL ASSOCIATION OF BRIDGE, STRUCTURAL AND ORNAMENTAL IRON WORKERS LOCAL NO. 60

BY: Donald A. McDermott, Bus Mgr.
(Name/Title)

CONSTRUCTION AND GENERAL LABORERS' LOCAL NO. 433

BY:
(Name/Title)

INTERNATIONAL UNION OF OPERATING ENGINEERS
LOCAL NO. 545

BY: [signature], President
(Name/Title)

INTERNATIONAL UNION OF OPERATING ENGINEERS
TECHNICAL ENGINEERING DIVISION LOCAL 545

BY: [signature], President
(Name/Title)

INTERNATIONAL BROTHERHOOD OF PAINTERS AND ALLIED
TRADES LOCAL NO. 31

BY: Michael F. Dems Business Rep.
(Name/Title)

UNITED ASSOCIATION OF JOURNEYMEN AND APPRENTICES
OF THE PLUMBING AND PIPEFITTING INDUSTRY
LOCAL NO. 267

BY: Frank R. Ficarra Jr. Bus. Mgr
(Name/Title)

UNITED UNION OF ROOFERS, WATERPROOFERS AND ALLIED
WORKERS LOCAL NO. 195

BY: James Milligan Bus. Mgr
(Name/Title)

Road sprinkler fitters LU 669
Gerald Singelton by Charles J McCoy

SHEET METAL WORKERS' INTERNATIONAL ASSOCIATION
LOCAL NO. 58

BY: [signature] BUSINESS MANAGER
(Name/Title)

INTERNATIONAL BROTHERHOOD OF TEAMSTERS, CHAUFFEURS, WAREHOUSEMEN AND HELPERS LOCAL NO. 317

BY: [signature] V.P.
(Name/Title)

BY: _____
(Name/Title)

BY: _____
(Name/Title)

BY: _____
(Name/Title)

OPERATIVE PLASTERERS & CEMENT MASONS INTERNATIONAL ASSOCIATION OF THE UNITED STATES & CANADA
LOCAL UNION NO. 519

BY: Michael D. Hanno Business Manager
(Name/Title)

ROBERT A. GEORGINE, President

JOHN T. JOYCE, 1st Vice President
CHARLES W. JONES, 2nd Vice President
EARL J. KRUSE, 3rd Vice President
J.J. BARRY, 4th Vice President
WILLIAM G. BERNARD, 5th Vice President
JAKE WEST, 6th Vice President

FRANK HANLEY, 7th Vice President
RON CAREY, 8th Vice President
A.L. MONROE, 9th Vice President
ARTHUR A. COIA, 10th Vice President
ARTHUR MOORE, 11th Vice President
DOUGLAS J. McCARRON, 12th Vice President
JOHN J. DOUGHERTY, 13th Vice President
MARTIN J. MADDALONI, 14th Vice President
EDWARD C. SULLIVAN, 15th Vice President

Building and Construction Trades Department

AMERICAN FEDERATION OF LABOR — CONGRESS OF INDUSTRIAL ORGANIZATIONS
1155 FIFTEENTH ST., N.W., 4TH FLOOR • WASHINGTON, D. C. 20005-2707

(202) 347-1461 FAX (202) 628-0724

August 20, 1998

William C. Towsley, President
Syracuse Building and
Construction Trades Council
825 Ganant Drive
Syracuse, NY 13204

Dear Bill,

The Department's Project Review Committee has considered your suggested project labor agreement for the Onondaga Lake Cleanup Project (PLA #687-98), located in Onondaga County, New York, and found it meets all the criteria for the General Presidents' Standard Project Labor Agreement. The Department therefore gives its approval to proceed with t his project.

With kind personal regards, I am

Sincerely and fraternally,

Robert A. Georgine
President

RAG/plj
opeiu #2
afl-cio

RECEIVED
SEP 10 1998

APPENDIX G

FEDERAL REQUIREMENTS AND CONTRACT PROVISIONS FOR THE

APPROPRIATIONS ACT GRANTS

U.S. ENVIRONMENTAL PROTECTION AGENCY
Region 2

Any contract or contracts awarded under this invitation for bids are expected to be funded in part by an Appropriations Act grant from the U.S. Environmental Protection Agency. Neither the United States nor any of its departments, agencies or employees is or will be a party to this invitation for bids or any resulting contract. This procurement will be subjected to regulations contained in 40 CFR Part 31.

The project or segment thereof to be constructed in accordance with these contract documents is subject to the following Federal requirements. In the event of conflict with other requirements of the contract documents, the following Federal requirements control unless the Federal requirement is a minimum requirement. Nothing in this document shall be construed to prohibit the owner from requiring additional assurances, guarantees, indemnities, or other contractual requirements from any other party to this agreement.

The Federal insert has been provided by the Owner to the Contractor for two reasons. Section I, IV, and V are required provisions of the construction contract and are hereby incorporated in that contract. The remaining sections have been provided as an aid in complying with Federal requirements and highlight particular sections of the regulations and regional requirements with which the bidders should be familiar.

THE BIDDERS SHOULD BE PARTICULARLY AWARE OF THE FOLLOWING CRITICAL REQUIREMENTS CONTAINED HEREIN:

1. THE AFFIRMATIVE ACTION PROGRAM REQUIREMENTS AND GOALS.
2. THE MINORITY BUSINESS ENTERPRISE (MBE) PROGRAM REQUIREMENTS.
3. THE MBE DOCUMENTATION REQUIREMENTS.
4. THE CERTIFICATION OF NONSEGREGATED FACILITIES.

CONTENTS

SECTION	TITLE
I	MODEL SUBAGREEMENT CLAUSES
II	NONDISCRIMINATION IN EMPLOYMENT
III	CERTIFICATION OF NONSEGREGATED FACILITIES
IV	AFFIRMATIVE ACTION REQUIREMENTS
V	AFFIRMATIVE ACTION PROGRAM
VI	REQUIRED PROVISIONS OF 40 CFR PART 31 SUBPART C
VII	ATTACHMENTS
	1. EXTRACTS FROM THE FEDERAL REGISTER
	2. NOTICE OF NONDISCRIMINATION OF EMPLOYMENT
	3. CERTIFICATION OF NONSEGREGATED FACILITIES

I MODEL SUBAGREEMENT CLAUSES APPROPRIATION ACT PROJECTS

§31.36 Model subagreement clauses.

(a) Recipients must include, when appropriate, the following thirteen clauses or their equivalent in each subagreement.

(b) Recipients may substitute other terms for "recipient" and "contractor" in their subagreements.

1. Supersession

The recipient and the contractor agree that this and other appropriate clauses in 40 CFR 31.36 or their equivalent apply to the EPA funded work to be performed under this subagreement and that these clauses supersede any conflicting provisions in this subagreement.

2. Privity of Subagreement

This subagreement is expected to be funded in part with funds from the U.S. Environmental Protection Agency. Neither the United States nor any of its departments, agencies, or employees is or will be a party to this subagreement or any lower tier subagreement. This subagreement is to be subject to regulations contained in 40 CFR Part 31 in effect on the date of the assistance award for this project.

3. Changes

(a) *This clause in paragraph (a) applies only to subagreements for construction.*

(1) The recipient may, at any time, without notice to any surety, by written order designated or indicated to be a change order, make any change in the work within the general scope of the subagreement, including but not limited to changes:

(i) In the specifications (including drawings and designs);

(ii) In the time, method, or manner of performance of the work;.

(iii) In the recipient-furnished facilities, equipment, materials, services, or site; or

(iv) Directing acceleration in the performance of the work.

(2) A change order shall also be any other written order (including direction, instruction, interpretation or determination) from the recipient which causes any change, provided the contractor gives the recipient written notice stating the date, circumstances, and source of the order and that the contractor regards the order as a change order.

(3) Except as provided in this clause, no order, statement, or conduct of the recipient shall be treated as a change under this clause or entitle the contractor to an equitable adjustment.

(4) If any change under this clause causes an increase or decrease in this contractor's cost or the time required to perform any part of the work under this contract, whether or not changed by any order, an equitable adjustment shall be made and the subagreement modified in writing and, except for claims based on defective specifications, no claim for any change under paragraph (a)(2) above shall be allowed for any costs incurred more than 20 days before the contractor gives written notice as required in paragraph(a)(2). In the case of defective specifications for which the recipient is responsible, the equitable adjustment shall include any increased cost reasonably incurred by the contractor in attempting to comply with those defective specifications.

(5) If the contractor intends to assert a claim for an equitable adjustment under this clause, he must, within 30 days after receipt of a written change order under paragraph (1) of this change clause or the furnishing of a written notice under paragraph (2) of this clause, submit to the recipient a written statement setting forth the general nature and monetary extent of such claim. The recipient may extend the 30-day period. The statement of claim may be included in the notice under paragraph (2) of this change clause.

(6) No claim by the Contractor for an equitable adjustment shall be allowed if made after final payment under this subagreement.

(b) *The clause in this paragraph applies to subagreements for services.*

(1) The recipient may, at any time, by written order, make changes within the general scope of this agreement in the services or work to be performed. If such changes cause an increase or decrease in the contractor's cost or time required to perform any services under this agreement, whether or not changed by any order, an equitable adjustment shall be made and this agreement shall be modified in writing. The contractor must assert any claim for adjustment under this clause in writing within 30 days from the date of receipt by the contractor of the notification of change unless the recipient grants additional time before the date of final payment.

(2) No services for which an additional compensation will be charged by the contractor shall be furnished without the written authorization of the recipient.

(c) *This clause in paragraph (c) applies only to subagreements for supplies.*

(1) The recipient may at any time, by a written order, and without notice to the sureties, make changes, within the general scope of this subagreement, in any one or more of the following:

(i) Drawings, designs, or specifications, where the supplies to be furnished are to be specially manufactured for the recipient;

(ii) Method of shipment or packing; and

(iii) Place of delivery.

(2) If any change causes an increase or decrease in the cost or the time required to perform any part of the work under this subagreement, whether or not changed by any such order, an equitable adjustment shall be made in the subagreement price or delivery schedule, or both, and the subagreement shall be modified in writing. Any claim by the contractor for adjustment under this clause must be asserted within 30 days from the date of receipt by the contractor of the notification of change. If the recipient decides that the facts justify such action, the recipient may receive and act upon any such claim asserted at any time before final payment under this subagreement. Where the cost of property made obsolete or excess as a result of a change is included in the contractor's claim for adjustment, the recipient shall have the right to prescribe the manner of disposition of such property. Nothing in this clause shall excuse the contractor from proceeding with the subagreement as changed.

4. Differing Site Conditions

(This clause is applicable only to construction subagreements.)

(a) The contractor shall promptly, and before such conditions are disturbed, notify the recipient in writing of:

(1) subsurface or latent physical conditions at the site differing materially from those indicated in this subagreement, or

(2) unknown physical conditions at the site, of an unusual nature, differing materially from those ordinarily encountered and generally recognized as inhering in work of the character provided for in this subagreement. The recipient shall promptly investigate the conditions, and if it finds that conditions materially differ and will cause an increase or decrease in the contractor's cost or the time required to perform any part of the work under this subagreement, whether or not changed as a result of such conditions, an equitable adjustable shall be made and the subagreement modified in writing.

(b) No claim of the contractor under this clause shall be allowed unless the contractor has given the notice required in paragraph (a) of this clause. However, the recipient may extend the time prescribed in paragraph (a).

(c) No claim by the contractor for an equitable adjustment shall be allowed if asserted after final payment under this subagreement.

5. Suspension of Work

(This clause is applicable only to construction subagreements.)

(a) The recipient may order the contractor in writing to suspend, delay, or interrupt all or any part of the work for such period of time as the recipient may determine to be appropriate for the convenience of the recipient.

(b) If the performance of all or any part of the work is suspended, delayed, or interrupted for an unreasonable period of time by an act of the recipient in administration of this subagreement, or by the recipient's failure to act within the time specified in this subagreement (or if no time is specified, within a reasonable time), an adjustment shall be made for any increase in the cost of performance of this subagreement (excluding profit) necessarily caused by such unreasonable suspension, delay, or interruption and the contract modified in writing. However, no adjustment shall be made under this clause for any suspension, delay, or interruption to the extent (1) that performance would have been so suspended, delayed, or interrupted by any other cause, including the fault or negligence of the contractor or (2) for which an equitable adjustment is provided for or excluded under any other provision of this subagreement.

(c) No claim under this clause shall be allowed (1) for any costs incurred more than 20 days before the contractor notified the recipient in writing of the act or failure to act involved (this requirement does not apply to a claim resulting from a suspension order), and (2) unless the claim, in an amount stated, is asserted in writing as soon as practicable after the termination of such suspension, delay or interruption, but not later than the date of final payment under the subagreement.

6. Termination

(a) This subagreement may be terminated in whole or in part in writing by either party in the event of substantial failure by the other party to fulfill its obligations under this subagreement through no fault of the terminating party, provided that no termination may be effected unless the other party is given (1) not less than ten (10) calendar days' written notice (delivered by certified mail, return receipt requested) of intent to terminate and (2) an opportunity for consultation with the terminating party prior to termination.

(b) This subagreement may be terminated in whole or in part in writing by the recipient for its convenience, provided that the contractor is given (1) not less than ten (10) calendar days' written notice (delivered by certified mail, return receipt requested) of intent to terminate and (2) an opportunity for consultation with the terminating party prior to termination.

(c) If termination for default is effected by the recipient, an equitable adjustment in the price provided for in this subagreement shall be made, but (1) no amount shall be allowed for anticipated profit on unperformed services or other work, and (2) any payment due to the contractor at the time of termination may be adjusted to cover any additional costs to the recipient because of the contractor's default. If termination for default is effected by the contractor, or if termination for convenience is effected by the recipient, the equitable adjustment shall include a reasonable profit for services or other work performed. The equitable adjustment for any termination shall provide for payment to the contractor for services rendered and expenses incurred prior to the termination, in addition to termination settlement costs reasonably incurred by the contractor relating to commitments which had become firm prior to the termination.

(d) Upon receipt of a termination action pursuant to paragraphs (a) or (b) above, the contractor shall (1) promptly discontinue all services affected (unless the notice directs otherwise), and (2) deliver or otherwise make available to the recipient all data, drawings, specifications, reports, estimates, summaries, and such other information and materials as may have been accumulated by the contractor in performing this subagreement, whether completed or in process.

(e) Upon termination under paragraphs (a) or (b) above, the recipient may take over the work and may award another party a subagreement to complete the work under this subagreement.

(f) If, after termination for failure of the contractor to fulfill contractual obligations, it is determined that the contractor had not failed to fulfill contractual obligations, the termination shall be deemed to have been for the convenience of the recipient. In such event, adjustment of the price provided for in this subagreement shall be made as provided in paragraph (c) of this clause.

7. Remedies

Except as may be otherwise provided in this subagreement, all claims, counter-claims, disputes, and other matters in question between the recipient and the contractor arising out of or relating to this subagreement or the breach thereof will be decided by arbitration if the parties mutually agree, or in a court of competent jurisdiction within the State in which the recipient is located.

8. Price Reduction for Defective Cost or Pricing Data

Note: *This clause is applicable to (1) any subagreements negotiated between the recipient and its contractor in excess of $100,000; (2) negotiated subagreement amendments or change orders in excess of $100,000 affecting the price of a formally advertised, competitively awarded, fixed price subagreement; or (3) any lower tier subagreement or purchase order in excess of $100,000 under a subagreement other than a formally advertised, competitively awarded, fixed price subagreement. This clause is not applicable for subagreements to the extent that they are awarded on the basis of effective prime competition.*

(a) The contractor and subcontractor, where appropriate, warrant that cost and pricing data submitted for evaluation with respcet to negotiation of prices for negotiated subagreements, lower tier subagreements, and change orders is based on current, accurate and complete data supported by their books and records. If the recipient or EPA determines that any price (including profit) negotiated in connection with this subagreement; any lower tier subagreement, or any amendment thereunder was increased by any significant sums because the data provided was incomplete, inaccurate, or not current at the time of submission, then such price or cost or profit shall be reduced accordingly; and the subagreement shall be modified in writing to reflect such action.

(b) Failure to agree on a reduction shall be subject to the remedies clause of this agreement.

Note.–*Since the subagreement is subject to reduction under this clause by reason of defective cost or pricing data submitted in connection with lower tier subagreements, the contractor may wish to include a clause in each lower tier subagreement requiring the contractor to appropriately indemnify the contractor. It is also expected that any lower tier subcontractor subject to such indemnification will generally require substantially similar indemnification or defective cost or pricing data required to be submitted by lower tier contractors.*

9. Audit; Access to Records

(a) The contractor shall maintain books, records, documents, and other evidence directly pertinent to performance on EPA funded work under this subagreement in accordanee with generally accepted accounting principles and practices consistently and practices consistently applied, and 40 CFR Part 31, in effect on the date of execution of this subagreement. The contractor shall also maintain the financial information and data used by the contractor in the preparation or support of the cost submission required under 40 CFR 31.36(f) for any negotiated subagreement or change order and a copy of the cost summary submitted to the recipient. The United States Environmental Protection Agency, the Comptroller General of the United States, the United States Department of Labor, recipient, and [State] or any of their authorized representatives shall have access to all such books, records, documents, and other evidence for the purpose of inspection, audit and copying during normal business hours. The contractor will provide proper facilities for such access and inspection.

(b) If this is a formally advertised, competitively awarded, fixed price subagreement, the contractor agrees to make paragraphs (a) through (g) of this clause applicable to all negotiated change orders and subagreement amendments affecting the subagreement price. In the case of all other types of prime subagreements, the contractor agrees to include paragraphs (a) through (g) of this clause in all his subagreements in excess of $10,000 and all lower tier subagreements in excess of $10,000 and to make paragraphs (a) through (g) of this clause applicable to all change orders directly related to project performance.

(c) Audits conducted under this provision shall be in accordance with generally accepted auditing standards and with established procedures and guidelines of the reviewing or audit agency(ies).

(d) The contractor agrees to disclose all information and reports resulting from access to records under paragraphs (a) and (b) of this clause to any of the agencies referred to in paragraph (a).

(e) Records under paragraphs (a) and (b) above shall be maintained by the contractor during performance by EPA assisted work under this subagreement and for the time periods specified in 40 CFR Part 31. In addition, those records which relate to any controversy arising under an EPA assistance agreement, litigation, the settlement of claims arising out of such performance or to costs or items to which an audit exception has been taken shall be maintained by the contractor for the time periods specified in 40 CFR Part 31.

(f) Access to records is not limited to the required retention periods. The authorized representatives designated in paragraphs (a) of this clause shall have access to records at any reasonable time for as long as the records are maintained.

(g) This right of access clause applies to financial records pertaining to all subagreements (except formally advertised, competitively awarded, fixed price subagreements) and all subagreement change orders regardless of the type of subagreement, and all subagreement amendments regardless of the type of subagreement. In addition this right of access applies to all records pertaining to all subagreements, subagreement change orders, and subagreement amendments:

(1) To the extent the records pertain directly to subagreement performance;
(2) If there is any indication that fraud, gross abuse or corrupt practices may be involved; or
(3) If the subagreement is terminated for default or for convenience.

10. Covenant Against Contingent Fees

The contractor warrants that no person or selling agency has been employed or retained to solicit or secure this subagreement upon an agreement or understanding for a commission, percentage, brokerage, or contingent fee, excepting bona fide employees or bona fide established commercial or selling agencies maintained by the contractor for the purpose of securing business. For breach or violation of this warranty the recipient shall have the right to annul this agreement without liability or in its discretion to deduct from the contract price or consideration, or otherwise recover, the full amount of such commission, percentage, brokerage, or contingent fee.

11. Gratuities

(a) If the recipient finds after a notice and hearing that the contractor, or any of the contractor's agents or representatives, offered or gave gratuities (in the form of entertainment, gifts, or otherwise), to any official, employee, or agent of the recipient, the State, or EPA in an attempt to secure a subagreement or favorable treatment in awarding, amending, or making any determinations related to the performance of this agreement, the recipient may, by written notice to the contractor, terminate this agreement. The recipient may also pursue other rights and remedies that the law or this agreement provides. However, the existence of the facts on which the recipient bases such findings shall in issue and may be reviewed in proceedings under the Remedies clause of this agreement.

(b) In the events this subagreement is terminated as provided in paragraph (a) the recipient may pursue the same remedies against the contractor as it could pursue in the event of a breach of the subagreement by the contractor, and as a penalty, in addition to any other damages to which it may be

entitled by law, to exemplary damages in an amount (as determined by the recipient) which shall be not less than three nor more then ten times the costs the contractor incurs in providing any such gratuities to any such officer or employee.

12. Responsibility of the Contractor

(b) The following clause applies only to subagreements for construction.

(1) The contractor agrees to perform all work under this subagreement in accordance with this agreement's designs, drawings and specifications.

(2) The contractor guarantees for a period of at least one (1) year from the date of substantial completion of the work that the completed work is free from all defects due to faulty materials, equipment or workmanship and he shall promptly make whatever adjustments or corrections which may be necessary to cure any defects, including repairs of any damage to other parts of the system resulting from such defects. The owner shall promptly give notice to the contractor of observed defects. In the event that the contractor fails to make adjustments, repairs, corrections or other work made necessary by such defects, the owner may do so and charge the contractor the cost incurred. The performance bond shall remain in full force and effect through the guarantee period.

(3) The contractor's obligations under this clause are in addition to the contractor's other express or implied assurances under this subagreement or State law and in no way diminish any other rights that the owner may have against the contractor for faulty materials, equipment or work.

13. Final Payment

Upon satisfactory completion of the work performed under this agreement, as a condition before final payment under this agreement, or as a termination settlement under this agreement, the contractor shall execute and deliver to the owner a release of all claims against the owner arising under or by virtue of this agreement, except claims which are specifically exempted by the contractor to be set forth therein. Unless otherwise provided in this agreement or by State law or otherwise expressly agreed to by the parties to this agreement, final payment under this agreement or settlement upon termination of this agreement shall not constitute a waiver of the owner's claims against the contractor or his sureties under this agreement or applicable performance and payment bonds.

II NONDISCRIMINATION IN EMPLOYMENT

EQUAL OPPORTUNITY CLAUSE (41 CFR 60-1.4)

Federally assisted construction contracts.

The applicant hereby agrees that it will incorporate or cause to be incorporated into any contract for construction work, or modification thereof, as defined in the regulations of the Secretary of Labor at 41 CFR Chapter 60, which is paid for in whole or in part with funds obtained from the Federal Government or borrowed on the credit of the Federal Government pursuant to a grant, contract, loan insurance, or guarantee, or undertaken pursuant to any Federal program involving such grant, contract, loan, insurance, or guarantee, the following equal opportunity clause:

During the performance of this contract, the contractor agrees as follows:

(1) The contractor will not discriminate against any employee or applicant for employment because of race, color, religion, sex, or national origin. The contractor will take affirmative action to ensure that applicants are employed, and that employees are treated during employment without regard to their race, color, religion, sex, or national origin, such action shall include, but not be limited to the following: Employment, upgrading, demotion, or transfer, recruitment or recruitment advertising; layoff or termination; rates of pay or other forms of compensation; and selection of training, including apprenticeship. The contractor agrees to post in conspicuous places, available to employees and applicants for employment, notices to be provided setting forth the provisions of this nondiscrimination clause.

(2) The contractor will, in all solicitations or advertisements for employees placed by or on behalf of the contractor, state that all qualified applicants will receive considerations for employment without regard to race, color, religion, sex, or national origin.

(3) The contractor will send to each labor union or representative of workers with which he has a collective bargaining agreement or other contract or understanding, a notice to be provided advising the said labor union or workers' representatives of the contractor's commitments under this section, and shall post copies of the notice in conspicuous places available to employees and applicants for employment.

(4) The contractor will comply with all provisions of Executive Order 11246 of September 24, 1965, and of the rules, regulations, and relevant orders of the Secretary of Labor.

(5) The contractor will furnish all information and reports required by Executive Order 11246 of September 24, 1965, and by rules, regulations, and orders of the Secretary of Labor, or pursuant thereto, and will permit access to his books, records, and accounts by the administering agency and the Secretary of Labor for purposes of investigation to ascertain compliance with such rules, regulations, and orders.

(6) In the event of the contractor's noncompliance with the nondiscrimination clauses of this contract or with any of the said rules, regulations, or orders, this contract may be canceled, terminated, or suspended in whole or in part and the contractor may declared ineligible for further Government contracts or federally assisted construction contracts in accordance with procedures authorized in Executive Order 11246 of September 24, 1965, and such other sanctions may be imposed and remedies invoked as provided in Executive Order 11246 of September 24, 1965, or by rule, regulation, or order of the Secretary of Labor, or as otherwise provided by law.

(7) The contractor will include the portion of the sentence immediately preceding paragraph (1) and the provisions of paragraph (1) through (7) in every subcontract or purchase order unless exempted by rules, regulation, or orders of the Secretary of Labor issued pursuant to section 204 of Executive 11246 of September 24, 1965, so that such provisions will be binding upon each subcontractor or vendor. The contractor will take such action with respect to any subcontractor or purchase order as the administering agency may direct as a means of enforcing such provisions, including sanctions for noncompliance: *Provided, however,* that in the event a contractor becomes involved in, or is threatened with litigation with a subcontractor or vendor as a result of such direction by the administering agency the contractor may request the United States to enter into such litigation to protect the interest of the United States.

The applicant further agrees that it will be bound by the above equal opportunity clause with respect to its own employment practices when it participates in federally assisted construction work: *Provided,* that if the applicant so participating is a State or local government, the above equal opportunity clause is not applicable to any agency, instrumentally or subdivision of such government which does not participate in work on or under the contract.

The applicant agrees that it will assist and cooperate actively with the administering agency and the Secretary of Labor in obtaining the compliance of contractors and subcontractors with the equal opportunity clause and the rules, regulations and relevant orders of the Secretary of Labor, that it will furnish the administering agency and the Secretary of Labor such information as they may require for the supervision of such compliance, and that it will otherwise assist the administering agency in the discharge of the agency's primary responsibility for securing compliance.

The applicant further agrees that it will refrain from entering into any contract or contract modification subject to Executive Order 11246 of September 24, 1965, with a contractor debarred from, or who has not demonstrated eligibility for, Government contracts and federally assisted construction contracts pursuant to the Executive order and will carry out such sanctions and penalties for violation of the equal opportunity clause as may be imposed upon contractors and subcontractors by the administering agency or the Secretary of Labor pursuant to Part II, Subpart D of the Executive order. In addition, the applicant agrees that if it fails or refuses to comply with these undertakings, the administering agency may take any or all of the following actions: Cancel, terminate, or suspend in whole or in part this grant (contract, loan, insurance, guarantee): refrain from extending any further assistance to the applicant under the program with respect to which the failure or refund occurred until satisfactory assurance of future compliance has been received from such applicant and refer the case to the Department of Justice for appropriate legal proceedings.

III CERTIFICATION OF NONSEGREGATED FACILITIES (41 CFR 60-1.8)

Bidders and offerors are cautioned as follows: By signing this bid or offer, the bidder or offeror will be deemed to have signed and agreed to the provisions of the "Certification of Nonsegregated Facilities" in this solicitation. The certification provides that the bidder or offeror does not maintain or provide for his employees facilities which are segregated on a basis of race, creed, color, or national origin, whether such facilities are segregated by directive or on a de facto basis. The certification also provides that he will not maintain such segregation facilities.

IV AFFIRMATIVE ACTION REQUIRMENTS

STANDARD FEDERAL EQUAL EMPLOYMENT OPPORTUNITY CONSTRUCTION CONTRACT SPECIFICATIONS (EXECUTIVE ORDER 11246)

1. As used in these specification:

a. "Covered area" means the geographical area described in the solicitation from which this contract resulted;

b. "Director" means Director, Office of Federal Contract Compliance Programs, United States Department of Labor, or any person to whom the Director delegates authority;

c. "Employer identification number" means the Federal Social Security number used on the Employee's quarterly Federal Tax Return, U.S. Treasury Department Form 941;

d. "Minority" includes:

(i) Black (all persons having origins in any of the Black African racial groups not of Hispanic origin);

(ii) Hispanic (all persons of Mexican, Puerto Rican, Cuban, Central or South American or other Spanish Culture or origin, regardless of race);

(iii)Asian and Pacific Islander (all persons having origins in any of the original peoples of the Far East, Southeast Asia, the Indian Subcontinent, or the Pacific Islands); and

(iv)American Indian or Alaskan Native (all persons having origins in any of the original peoples of North American and maintaining identifiable tribal affiliation through membership and participation or community identification).

2. Whenever the Contractor, or subcontractor at any tier, subcontract a portion of the work involving any construction trade, it shall physically include in each subcontract in excess of $10,000 the provisions of these specifications and the Notice which contains the applicable goals for minority and female participation and which is set forth in the solicitations from which this contract resulted.

3. If the Contractor is participating (pursuant to 41 CFR 60-4.5) in a Hometown Plan approved by the U.S. Department of Labor in the covered area either individually or through an associations, its affirmative action obligations on all work in the Plan area (including goals and timetables) shall be in accordance with that Plan for those trades which have unions participation in the Plan. Contractors must be able to demonstrate their participation in and compliance with the provisions of any such Hometown Plan. Each Contractor or Subcontractor participation in an approved Plan is individually required to comply with its obligations under the EEO clause, and to make a good faith effort to achieve each goal under the Plan in each trade in which it has employees. The overall good faith performance by other Contractors or Subcontractors toward a goal in an approved Plan does not excuse any covered Contractor's or Subcontractor's failure to take good faith efforts to achieve the Plan goals and timetables.

4. The contractor shall implement the specific affirmative action standards provided in paragraphs 7 a through p of these specifications. The goals set forth in the solicitation from which this contract resulted are expressed as percentages of the total hours of employment and training of minority and female utilization the Contractor should reasonably be able to achieve in each construction trade in which it has employees in the covered area. Covered Construction contractors performing construction work in geographical areas where they do not have a Federal or federally assisted construction contract shall apply the minority and female goals established for the geographical area where the work is being performed. Goals are published periodically in the Federal Register in notice form and such notices may be obtained from any Office of Federal Contract Compliance Programs office or from Federal procurement contracting officers. The Contractor is expected to make substantially uniform progress in meeting its goals in each craft during the period specified.

5. Neither the provisions of any collective bargaining agreement, nor the failure by a union with whom the Contractor has a collective bargaining agreement, to refer

either minorities or women shall excuse the Contractor's obligations under these specifications, Executive Order 11246, or the regulations promulgated pursuant thereto.

6. In order for the nonworking training hours of apprentices and trainees to be counted in meeting the goals, such apprentices and trainees must be employed by the Contractor during the training period, and the Contractor must have made a commitment to employ the apprentices and trainees at the completion of their training subject to the availability of employment opportunities. Trainees must be trained pursuant to training programs approved by the U.S. Department of Labor.

7. The Contractor shall take specific affirmative actions to ensure equal employment opportunity. The evaluation of the Contractor's compliance with these specifications shall be based upon its effort to achieve maximum results from its actions. The Contractor shall document these efforts fully, and shall implement affirmative actions steps at least as extensive as the following:

a. Ensure and maintain a working environment free of harassment, intimidation, and coercion at all sites, and in all facilities at which the Contractor's employees are assigned to work. The Contractor, where possible, will assign two or more women to each construction project. The Contractor shall specifically ensure that all foremen, superintendents, and other onsite supervisory personnel are aware of and carry out the Contractor's obligation to maintain such a working environment, which specific attention to minority or female individuals working at sites or such facilities.

b. Establish and maintain a current list of minority and female recruitment sources, provide written notification to minority and female recruitment sources and to community organizations when the Contractor or its unions have employment opportunities available, and maintain a record of the organizations' responses.

c. Maintain a current file of the names, addresses and telephone numbers of each minority and female off-the-street applicant and minority or female referral from a union, a recruitment source or community organization and of what action was taken with respect to each such individual. If such individual was sent to the union hiring hall for referral and was not referred back to the Contractor by the union or, if referred, not employed by the Contractor, this shall be documented in the file with the reason therefor, along with whatever additional actions the Contractor may have taken.

d. Provide immediate written notification to the Director when the union or unions with which the Contractor has a collective bargaining agreement has not been referred to the Contractor a minority person or woman sent by the Contractor, or when the Contractor has other information that the union referral process has impeded the Contractor's efforts to meet its obligations.

e. Develop on-the-job training opportunities and/or participate in training programs for the area which expressly include minorities and women, including upgrading programs and apprenticeship programs relevant to the Contractor's employment needs, especially those programs funded or approved by the Department of Labor. The Contractor shall provide notice of these programs to the sources compiled under 7b above.

f. Disseminate the Contractor's EEO policy by providing notice of the policy to unions and training programs and requesting their cooperation in assisting the Contractor in meeting its EEO obligations; by including it in any policy manual and collective bargaining agreement; by publicizing it in the company newsletter, annual report, etc; by specific review of the policy with all management personnel and with all minority and female employees at least once a year; and by posting the company EEO policy on bulletin boards accessible to all employees at each location where construction work is performed.

g. Review, at least annually, the company's EEO policy and affirmative action obligations under these specifications with all employees having responsibility for hiring, assignment, layoff, termination or other employment decisions including specific review of these items with onsite supervisory personnel such as Superintendents, General Foreman, etc., prior to the initiation of construction work at any joy site. A written record shall be made and maintained identifying the time and place of these meetings, persons attending, subject matter discussed, and disposition of the subject matter.

h. Disseminate the Contractor's EEO policy externally by including it in any advertising in the news media, specifically including minority and female news media, and providing written notification to and discussing the Contractor's EEO policy with other Contractors and Subcontractors with whom the contractor does or anticipates doing business.

i. Direct its recruitment efforts, both oral and written, to minority, female and community organizations, to schools with minority and female students and to minority and female recruitment and training organizations serving the Contractor's recruitment area and employment needs. Not later than one month prior to the date for the acceptance of applications for apprenticeship or other training by any recruitment source, the Contractor shall send written notification to organizations such as the above, describing the openings, screening procedures, and tests to be used in the selection process.

j. Encourage present minority and female employees to recruit other minority persons and women and, where reasonable, provide after school, summer and vacation employment to minority and female youth both on the site and in other areas of a Contractor's work force.

k. Validate all tests and other selection requirements where there is an obligation to do so under 41 CFR Part 60-3.

l. Conduct, at least annually, an inventory and evaluation at least of all minority and female personnel for promotional opportunities and encourage these employees to seek or to prepare for, through appropriate training, etc., such opportunities.

m. Ensure that seniority practices, job classifications, work assignments and other personnel practices, do not have a discriminatory effect by continually monitoring all personnel and employment related activities to ensure that the EEO policy and the Contractor's obligations under these specifications are being carried out.

n. Ensure that all facilities and company activities are nonsegregated expect that separate or single-user toilet and necessary changing facilities shall be provided to assure privacy between the sexes.

o. Document and maintain a record of all solicitations of offers for subcontracts from minority and female construction contractors and suppliers, including circulation of solicitations to minority and female contractor associations and other business associations.

p. Conduct a review, at least annually, of all supervisor's adherence to and performance under the Contractor's EEO policies and affirmative action obligations.

8. Contractors are encouraged to participate in voluntary associations which assist in fulfilling once or more of their affirmative action obligations (7a through p). The efforts of a

contractor association, joint contractor-union, contractor-community, or other similar group of which the contractor is a member and participant, may be asserted as fulfilling any one or more of its obligations under 7a through p of these Specifications provided that the contractor actively participates in the group, makes every effort to assure that the group has a positive impact on the employment of minorities and women in the industry, ensures that the concrete benefits of the program are reflected in the Contractor's minority and female workforce participation, makes a good faith effort to meet its individual goals and timetables, and can provide access to documentation which demonstrates the effectiveness of actions taken on behalf of the Contractor. The obligation to comply, however, is the Contractor's and failure of such a group to fulfill an obligation shall not be a defense for the Contractor's noncompliance.

9. A single goal for minorities and a separate single goal for women have been established. The Contractor, however, is required to provide equal employment opportunity and to take affirmative action for all minority groups, both male and female, and all women, both minority and non-minority. Consequently, the Contractor may be in violation of the Executive Order if a particular group is employed in a substantially disparate manner (for example, even though the Contractor has achieved its goals for women generally, the Contractor may be in violation of the Executive Order if a specific minority group of women is underutilized).

10. The Contractor shall not use the goals and timetables or affirmative action standards to discriminate against any person because of race, color, religion, sex, or national origin.

11. The Contractor shall not enter into any Subcontract with any person or firm debarred from Government contracts pursuant to Executive Order 11246.

12. The Contractor shall carry out such sanctions and penalties for violation of these specifications and of the Equal Opportunity Clause, including suspension, termination and cancellation of existing subcontracts as may be imposed or ordered pursuant to Executive Order 11246, as amended, and its implementing regulations, by the Office of Federal Contract Compliance Programs. Any Contractor who fails to carry out such sanctions and penalties shall be in violation of these specifications and Executive Order 11246, as amended.

13. The Contractor, in fulfilling its obligations under these specifications, shall implement specific affirmative action steps, at least as extensive as those standards prescribed in paragraph 7 of these specifications, so as to achieve maximum results from its efforts to ensure equal employment opportunity. If the Contractor fails to comply with the requirements of the Executive Order, the implementing regulations, or these specifications, to Director shall proceed in accordance with 41 CFR 60-4.8.

14. The Contractor shall designate a responsible official to monitor all employment related activity to ensure that the company EEO policy is being carried out, to submit reports relating to the provisions hereof as may be required by the Government and to keep records. Records shall at least include for each employee the name, address, telephone numbers, construction trade, union affiliation if any, employee identification number when assigned, social security number, race, sex, status (e.g., mechanic, apprentice trainee, helper, or laborer), dates of changes in status, hours worked per week in the indicated trade, rate of pay, and locations at which the work was performed. Records shall be maintained in an easily understandable and retrievable form; however, to the degree that existing records satisfy this requirement, contractors shall not be required to maintain separate records.

15. Nothing herein provided shall be construed as a limitation upon the application of other laws which establish different standards of compliance or upon the application of requirements for the hiring of local or other residents (e.g., those under the Public Works Employment Act of 1977 and the Community Development Block Grant Program).

V AFFIRMATIVE ACTION PROGRAM

The contractor is subject to the requirements in 40 CFR Part 60.

The minority and female goals apply to Federal and federally assisted construction contractors and subcontractors which have covered contracts. The goals are expressed as a percentage of the total hours worked by such a covered's or subcontractor's entire onsite construction workforce which is working on any construction site within a relevant area. The goal applies to each construction craft and trade in the contractor's entire workforce in the relevant area including those employees working on private nonfederally involved projects.

VI REQUIRED PROVISIONS OF 40 CFR PART 31 SUBPART C

The contractor agrees that "construction" work (as defined by the Secretary of Labor) shall be subject to the following provisions to the extent applicable:

A. All contracts regardless of dollar value.

1. Patents, Data, and Copyright Clause

The contractor agrees to comply with the Environmental Protection Agency's (EPA) requirements and regulations pertaining to reporting and patent rights under any subagreement involving research, developmental, experimental or demonstration work with respect to any discovery or invention which arise or is developed in the course of or under the agreement and with EPA requirements and regulations pertaining to copyrights and rights contained in 40 CFR Part 31.

B. Contracts awarded in excess of $10,000

1. Equal Employment Opportunity Clause

The contractor agrees to comply with Executive Order 11246, entitled Equal Employment Opportunity, as amended by Executive Order 11375, and as supplemented in Dept. of Labor regulations (41 CFR Part 60).

C. Contracts awarded in excess of $100,000

1. Violating Facilities Clause

The contractor agrees to comply with all applicable standards, orders, or requirements issued under section 306 of the Clean Air (42 U.S.C. 1857 (h)), section 508 of the Clean Water Act (33 U.S.C. 1368), Executive Order 11738, and EPA regulations (40 CFR Part 15) which prohibit the award of this contract to facilities included on the EPA List of Violating Facilities. The contractor shall report violations to EPA.

VII. Attachments

ATTACHMENT 1

EXTRACTS FROM THE FEDERAL REGISTER

(The following is taken from Titles 40 and 41 of the Federal Register)

Title 41 Part 60 – Office of Federal Contract Compliance Programs, Equal-Employment Opportunity, Department of Labor

Part 60-1 – Obligations of Contractors and Subcontractors

60-1.7 Reports and other required information
60-1.8(b) Segregated facilities
60-1.20(d) Compliance reviews
60-1.41 Solicitation or advertisements for employees
60-1.42 Notice to be posted
60-1.43 Access to records and site of employment

Title 40 Part 31 – Uniform Administration Requirements for Grants and Cooperative Agreements to State and Local Governments

Subpart C – Post-Award Requirements

31.34 Copyrights
31.35 Subawards to debarred and suspended parties
31.36(b) Procurement standards
31.36(c) Competition
31.36(e) Small and minority firms, women's business enterprise and labor surplus area firms
31.36(h) Bonding requirements

Note: Part 31 contains references to the Davis-Bacon Act and "Buy American" requirements of the Clean Water Act.

Authority: 7 U.S.C. 136 *et seq.*; 15 U.S.C. 2601 *et seq.*; 20 U.S.C. 4011 *et seq.*; 33 U.S.C. 1251 *et seq.*; 33 U.S.C. 1401 *et seq*; 42 U.S.C. 300f. *et seq.*; 42 U.S.C. 6901 *et seq.*; 42 U.S.C. 7401 *et seq.*; 42 U.S.C. 9601 *et seq.*; and Executive Order 11246.

Part 60-1 -- Obligations of Contractors and Subcontractors

§ 60–1.7 Reports and other required information.

(a) Requirements for prime contractors and subcontractors. (1) Each prime contractor and subcontractor shall file annually, on or before the September 30, complete and aecurate reports on Standard Form 100 (EEO–1) promulgated jointly by the Office of Federal Contract Compliance Programs, the Equal Employment Opportunity Commission and Plans for Progress or such form as may hereafter be promulgated in its place if such prime contractor or subcontractor (i) is not exempt from the provisions of these regulations in accordance with § 60–1.5; (ii) has 50 or more employees; (iii) is a prime contractor or first tier subcontractor; and (iv) has a contract, subcontract or purchase order amounting to $50,000 or more or serves as a depository of Government funds in any amount, or is a financial institution which is an issuing and paying agent for U.S. savings bonds and savings notes: *Provided,* That any subcontractor below the first tier which performs construction work at the site of construction shall be required to file such a report if it meets requirements of paragraphs (a)(1) (i), (ii), and (iv) of this section.

(2) Each person required by § 60–1.7(a)(1) to submit reports shall file such a report with the contracting or administering agency within 30 days after the award to him of a contract or subcontract, unless such person has submitted such a report within 12 months preceding the date of the award. Subsequent reports shall be submitted annually in accordance with § 60–1.7(a)(1), or at such other intervals as the Deputy Assistant Secretary may require. The Deputy Assistant Secretary may extend the time for filing any report.

(3) The Deputy Assistant Secretary or the applicant, on their own motions, may require a contractor to keep employment or other records and to furnish, in the form requested, within reasonable limits, such information as the Deputy Assistant Secretary or the applicant deems necessary for the administration of the order.

(4) Failure to file timely, complete and accurate reports as required constitutes noncompliance with the prime contractor's or subcontractor's obligations under the equal opportunity clause and is ground for the imposition by the Deputy Assistant Secretary, an applicant, prime contractor or subcontractor, of any sanctions as authorized by the order and the regulations in this part.

(b) *Requirements for bidders or prospective contractors*—(1) *Certification of compliance with Part 60–2: Affirmative Action Programs.* Each agency shall require each bidder or prospective prime contractor and proposed subcontractor, where appropriate, to state in the bid or in writing at the outset of negotiations for the contract:

(i) Whether it has developed and has on file at each establishment affirmative action programs pursuant to Part 60–2 of this chapter; (ii) whether it has participated in any previous contract or subcontract subject to the equal opportunity clause; (iii) whether it has filed with the Joint Reporting Committee, the Deputy Assistant Secretary or the Equal Employment Opportunity Commission all reports due under the applicable filing requirements.

(2) *Additional information.* A bidder or prospective prime contractor or proposed subcontractor shall be required to submit such information as the Deputy Assistant Secretary requests prior to the award of the contract or subcontract. When a determination has been made to award the contract or subcontract to a specific contractor, such contractor shall be required, prior to award, or after the award, or both, to furnish such other information as the applicant or the Deputy Assistant Secretary requests.

(c) *Use of reports.* Reports filed pursuant to this section shall be used only in connection with the administration of the order, the Civil Rights Act of 1964, or in furtherance of the purposes of the order and said Act.

§ 60–1.8 Segregated facilities.

To comply with its obligations under the Order, a contractor must ensure that facilities provided for employees are provided in such a manner that segregation on the basis of race, color, religion, sex or national origin cannot result. The contractor may neither require such segregated use by written or oral policies nor tolerate such use by employee custom. The contractor's obligation extends further to ensuring that its employees are not assigned to perform their services at any location, under the contractor's control, where the facilities are segregated. This obligation extends to all contracts containing the equal opportunity clause regardless of the amount of the contract. The term "facilities," as used in this section, means waiting rooms, work areas, restaurants and other eating areas, time clocks, restrooms, wash rooms, locker rooms, and other storage or dressing areas, parking lots, drinking fountains, recreation or entertainment areas, transportation, and housing provided for employees; *Provided,* That separate or single-user restrooms and necessary dressing or sleeping areas shall be provided to assure privacy between the sexes.

§ 60–1.20 Compliance evaluations.

(d) *Preaward compliance evaluations.* Each agency shall include in the invitation for bids for each formally advertised nonconstruction contract or state at the outset of negotiations for each negotiated contract, that if the award, when let, should total $10 million or more, the prospective contractor and its known first tier subcontractors with subcontracts of $10 million or more shall be subject to a compliance evaluation before the award of the contract unless OFCCP has conducted an evaluation and found them to be in compliance with the Order within the preceding 24 months. The awarding agency will notify OFCCP and request appropriate action and findings in accordance with this subsection. Within 15 days of the notice OFCCP will inform the awarding agency of its intention to conduct a preaward compliance evaluation. If OFCCP does not inform the awarding agency within that period of its intention to conduct a preaward compliance evaluation, clearance shall be presumed and the awarding agency is authorized to proceed with the award. If OFCCP informs the awarding agency of its intention to conduct a preaward compliance evaluation, OFCCP shall be allowed an additional 20 days after the date that it so informs the awarding agency to provide its conclusions. If OFCCP does not provide the awarding agency with its conclusions within that period, clearance shall be presumed and the awarding agency is authorized to proceed with the award.

§ 60–1.41 Solicitations or advertisements for employees.

In solicitations or advertisements for employees placed by or on behalf of a prime contractor or subcontractor, the requirements of paragraph (2) of the equal opportunity clause shall be satisfied whenever the prime contractor or subcontractor complies with any of the following:

(a) States expressly in the solicitations or advertising that all qualified applicants will receive consideration for employment without regard to race, color, religion, sex, or national origin;

(b) Uses display or other advertising, and the advertising includes an appropriate insignia prescribed by the Deputy Assistant Secretary. The use of the insignia is considered subject to the provisions of 18 U.S.C. 701;

(c) Uses a single advertisement, and the advertisement is grouped with other advertisements under a caption which clearly states that all employers in the group assure all qualified applicants equal consideration for employment without regard to race, color, religion, sex, or national origin;

(d) Uses a single advertisement in which appears in clearly distinguishable type the phrase "an equal opportunity employer."

§ 60–1.42 Notices to be posted.

(a) Unless alternative notices are prescribed by the Deputy Assistant Secretary, the notices which contractors are required to post by paragraphs (1) and (3) of the equal opportunity clause in § 60–1.4 will contain the following language and be provided by the contracting or administering agencies:

EQUAL EMPLOYMENT OPPORTUNITY IS THE LAW—DISCRIMINATION IS PROHIBITED BY THE CIVIL RIGHTS ACT OF 1964 AND BY EXECUTIVE ORDER NO. 11246

Title VII of the Civil Rights Act of 1964—*Administered by:*

THE EQUAL EMPLOYMENT OPPORTUNITY COMMISSION

Prohibits discrimination because of Race, Color, Religion, Sex, or National Origin by Employers with 15 or more employees, by Labor Organizations, by Employment Agencies, and by Apprenticeship or Training Programs.

ANY PERSON

Who believes he or she has been discriminated against

SHOULD CONTACT

THE EQUAL EMPLOYMENT OPPORTUNITY COMMISSION

1801 L Street NW., Washington, DC 20507

Executive Order No. 11246—*Administered by:*

THE OFFICE OF FEDERAL CONTRACT COMPLIANCE PROGRAMS

Prohibits discrimination because of Race, Color, Religion, Sex, or National Origin, and requires affirmative action to ensure equality of opportunity in all aspects of employment.

By all Federal Government Contractors and Subcontractors, and by Contractors Performing Work Under a Federally Assisted Construction Contract, regardless of the number of employees in either case.

ANY PERSON

Who believes he or she has been discriminated against

SHOULD CONTACT

THE OFFICE OF FEDERAL CONTRACT COMPLIANCE PROGRAMS

U.S. Department of Labor, Washington, DC 20210

(b) The requirements of paragraph (3) of the equal opportunity clause will be satisfied whenever the prime contractor or subcontractor posts copies of the notification prescribed by or pursuant to paragraph (a) of this section in conspicuous places available to employees, applicants for employment, and representatives of each labor union or other organization representing his employees with which he has a collective bargaining agreement or other contract or understanding.

§ 60–1.43 Access to records and site of employment.

Each contractor shall permit access during normal business hours to its premises for the purpose of conducting onsite compliance evaluations and complaint investigations. Each contractor shall permit the inspecting and copying of such books and accounts and records, including computerized records, and other material as may be relevant to the matter under investigation and pertinent to compliance with the Order, and the rules and regulations promulgated pursuant thereto by the agency, or the Deputy Assistant Secretary. Information obtained in this manner shall be used only in connection with the administration of the Order, the Civil Rights Act of 1964 (as amended), and any other law that is or may be enforced in whole or in part by OFCCP.

Subpart C – Post-Award Requirements

§ 31.34 Copyrights.

The Federal awarding agency reserves a royalty-free, nonexclusive, and irrevocable license to reproduce, publish or otherwise use, and to authorize others to use, for Federal Government purposes:

(a) The copyright in any work developed under a grant, subgrant, or contract under a grant or subgrant; and

(b) Any rights of copyright to which a grantee, subgrantee or a contractor purchases ownership with grant support.

§ 31.35 Subawards to debarred and suspended parties.

Grantees and subgrantees must not make any award or permit any award (subgrant or contract) at any tier to any party which is debarred or suspended or is otherwise excluded from or ineligible for participation in Federal assistance programs under Executive Order 12549, "Debarment and Suspension."

§ 31.36 Procurement.

(b) *Procurement standards.* (1) Grantees and subgrantees will use their own procurement procedures which

reflect applicable State and local laws and regulations, provided that the procurements conform to applicable Federal law and the standards identified in this section.

(2) Grantees and subgrantees will maintain a contract administration system which ensures that contractors perform in accordance with the terms, conditions, and specifications of their contracts or purchase orders.

(3) Grantees and subgrantees will maintain a written code of standards of conduct governing the performance of their employees engaged in the award and administration of contracts. No employee, officer or agent of the grantee or subgrantee shall participate in selection, or in the award or administration of a contract supported by Federal funds if a conflict of interest, real or apparent, would be involved. Such a conflict would arise when:

(i) The employee, officer or agent,

(ii) Any member of his immediate family,

(iii) His or her partner, or

(iv) An organization which employs, or is about to employ, any of the above, has a financial or other interest in the firm selected for award. The grantee's or subgrantee's officers, employees or agents will neither solicit nor accept gratuities, favors or anything of monetary value from contractors, potential contractors, or parties to subagreements. Grantee and subgrantees may set minimum rules where the financial interest is not substantial or the gift is an unsolicited item of nominal intrinsic value. To the extent permitted by State or local law or regulations, such standards or conduct will provide for penalties, sanctions, or other disciplinary actions for violations of such standards by the grantee's and subgrantee's officers, employees, or agents, or by contractors or their agents. The awarding agency may in regulation provide additional prohibitions relative to real, apparent, or potential conflicts of interest.

(4) Grantee and subgrantee procedures will provide for a review of pro posed procurements to avoid purchase of unnecessary or duplicative items. Consideration should be given to consolidating or breaking out procurements to obtain a more economical purchase. Where appropriate, an analysis will be made of lease versus purchase alternatives, and any other appropriate analysis to determine the most economical approach.

(5) To foster greater economy and efficiency, grantees and subgrantees are encouraged to enter into State and local intergovernmental agreements for procurement or use of common goods and services.

(6) Grantees and subgrantees are encouraged to use Federal excess and surplus property in lieu of purchasing new equipment and property whenever such use is feasible and reduces project costs.

(7) Grantees and subgrantees are encouraged to use value-engineering clauses in contracts for construction projects of sufficient size to offer reasonable opportunities for cost reductions. Value engineering is a systematic and creative analysis of each contract item or task to ensure that its essential function is provided at the overall lower cost.

(8) Grantees and subgrantees will make awards only to responsible contractors possessing the ability to perform successfully under the terms and conditions of a proposed procurement. Consideration will be given to such matters as contractor integrity, compliance with public policy, record of past performance, and financial and technical resources.

(9) Grantees and subgrantees will maintain records sufficient to detail the significant history of a procurement. These records will include, but are not necessarily limited to the following: rationale for the method of procurement, selection of contract type, contractor selection or rejection, and the basis for the contract price.

(10) Grantees and subgrantees will use time and material type contracts only—

(i) After a determination that no other contract is suitable, and

(ii) If the contract includes a ceiling priee that the contractor exceeds at its own risk.

(11) Grantees and subgrantees alone will be responsible, in accordance with good administrative practice and sound business judgment, for the settlement of all contractual and administrative issues arising out of procurements. These issues include, but are not limited to source evaluation, protests, disputes, and claims. These standards do not relieve the grantee or subgrantee of any contractual responsibilities under its contracts. Federal agencies will not substitute their judgment for that of the grantee or subgrantee unless the matter is primarily a Federal concern. Violations of law will be referred to the local, State, or Federal authority having proper jurisdiction.

(12) Grantees and subgrantees will have protest procedures to handle and resolve disputes relating to their procurements and shall in all instances disclose information regarding the protest to the awarding agency. A protestor must exhaust all administrative remedies with the grantee and subgrantee before pursuing a protest with the Federal agency. Reviews of protests by the Federal agency will be limited to:

(i) Violations of Federal law or regulations and the standards of this section
(violations of State or local law will be under the jurisdiction of State or local authorities) and

(ii) Violations of the grantee's or subgrantee's protest procedures for failure to review a complaint or protest. Protests received by the Federal agency other than those specified above will be referred to the grantee or subgrantee.

(c) *Competition.* (1) All procurement transactions will be conducted in a manner providing full and open competition consistent with the standards of § 31.36. Some of the situations considered to be restrictive of competition include but are not limited to:

(i) Placing unreasonable requirements on firms in order for them to qualify to do business,

(ii) Requiring unnecessary experience and excessive bonding,

(iii) Noncompetitive pricing practices between firms or between affiliated companies,

(iv) Noncompetitive awards to consultants that are on retainer contracts,

(v) Organizational conflicts of interest,

(vi) Specifying only a "brand name" product instead of allowing "an equal" product to be offered and describing the performance of other relevant requirements of the procurement, and

(vii) Any arbitrary action in the procurement process.

(2) Grantees and subgrantees will conduct procurements in a manner that prohibits the use of statutorily or administratively imposed in-State or local geographical preferences in the evaluation of bids or proposals, except in those cases where applicable Federal statutes expressly mandate or encourage

geographic preference. Nothing in this section preempts State licensing laws. When contracting for architectural and engineering (A/E) services, geographic location may be a selection criteria provided its application leaves an appropriate number of qualified firms, given the nature and size of the project, to compete for the contract.

(3) Grantees will have written selection procedures for procurement transactions. These procedures will ensure that all solicitations:

(i) Incorporate a clear and accurate description of the technical requirements for the material, product, or service to be procured. Such description shall not, in competitive procurements, contain features which unduly restrict competition. The description may include a statement of the qualitative nature of the material, product or service to be procured, and when necessary, shall set forth those minimum essential characteristics and standards to which it must conform if it is to satisfy its intended use. Detailed product specifications should be avoided if at all possible. When it is impractical or uneconomical to make a clear and accurate description of the technical requirements, a "brand name or equal" description may be used as a means to define the performance or other salient requirements of a procurement. The specific features of the named brand which must be met by offerors shall be clearly stated; and

(ii) Identify all requirements which the offerors must fulfill and all other factors to be used in evaluating bids or proposals.

(4) Grantees and subgrantees will ensure that all prequalified lists of persons, firms, or products which are used in acquiring goods and services are current and include enough qualified sources to ensure maximum open and free competition. Also, grantees and subgrantees will not preclude potential bidders from qualifying during the solicitation period.

(5) Construction grants awarded under Title II of the Clean Water Act are subject to the following "Buy American" requirements in paragraphs (c)(5) (i)–(iii) of this section. Section 215 of the Clean Water Act requires that contractors give preference to the use of domestic material in the construction of EPA-funded treatment works.

(i) Contractors must use domestic construction materials in preference to nondomestic material if it is priced no more than 6 percent higher than the bid or offered price of the nondomestic material, including all costs of delivery to the construction site and any applicable duty, whether or not assessed. The grantee will normally base the computations on prices and costs in effect on the date of opening bids or proposals.

(ii) The award official may waive the Buy American provision based on factors the award official considers relevant, including:

(A) Such use is not in the public interest;

(B) The cost is unreasonable;

(C) The Agency's available resources are not sufficient to implement the provision, subject to the Deputy Administrator's concurrence;

(D) The articles, materials or supplies of the class or kind to be used or the articles, materials or supplies from which they are manufactured are not mined, produced or manufactured in the United States in sufficient and reasonably available commercial quantities or satisfactory quality for the particular project; or

(E) Application of this provision is contrary to multilateral government procurement agreements, subject to the Deputy Administrator's concurrence.

(iii) All bidding documents, subagreements, and, if appropriate, requests for proposals must contain the following "Buy American" provision: In accordance with section 215 of the Clean Water Act (33 U.S.C. 1251 *et seq.*) and implementing EPA regulations, the contractor agrees that preference will be given to domestic construction materials by the contractor, subcontractors, material men and suppliers in the performance of this subagreement.

(e) *Contracting with small and minority firms, women's business enterprise and labor surplus area firms.* (1) The grantee and subgrantee will take all necessary affirmative steps to assure that minority firms, women's business enterprises, and labor surplus area firms are used when possible.

(2) Affirmative steps shall include:

(i) Placing qualified small and minority businesses and women's business enterprises on solicitation lists;

(ii) Assuring that small and minority businesses, and women's business enterprises are solicited whenever they are potential sources;

(iii) Dividing total requirements, when economically feasible, into smaller tasks or quantities to permit maximum participation by small and minority business, and women's business enterprises;

(iv) Establishing delivery schedules, where the requirement permits, which encourage participation by small and minority business, and women's business enterprises;

(v) Using the services and assistance of the Small Business Administration, and the Minority Business Development Agency of the Department of Commerce; and

(vi) Requiring the prime contractor, if subcontracts are to be let, to take the affirmative steps listed in paragraphs (e)(2) (i) through (v) of this section.

(h) *Bonding requirements.* For construction or facility improvement contracts or subcontracts exceeding the simplified acquisition threshold, the awarding agency may accept the bonding policy and requirements of the grantee or subgrantee provided the awarding agency has made a determination that the awarding agency's interest is adequately protected. If such a determination has not been made, the minimum requirements shall be as follows:

(1) *A bid guarantee from each bidder equivalent to five percent of the bid price.* The "bid guarantee" shall consist of a firm commitment such as a bid bond, certified check, or other negotiable instrument accompanying a bid as assurance that the bidder will, upon acceptance of his bid, execute such contractual documents as may be required within the time specified.

(2) *A performance bond on the part of the contractor for 100 percent of the contract price.* A "performance bond" is one executed in connection with a contract to secure fulfillment of all the contractor's obligations under such contract.

(3) *A payment bond on the part of the contractor for 100 percent of the contract price.* A "payment bond" is one executed in connection with a contract to assure payment as required by law of all persons supplying labor and material in the execution of the work provided for in the contract.

ATTACHMENT 2

Copies of the following notice will be posted in conspicuous places available to employees or applicants for employment:

NOTICE TO LABOR UNIONS OR OTHER ORGANIZATIONS OF WORKERS
NONDISCRIMINATION IN EMPLOYMENT

TO:_____
(Name of union or organization of workers)

The undersigned currently holds contract(s) with the County of Onondaga involving funds or credit of the U.S. Government or (a) subcontractor(s) with a prime contractor holding such contract(s).

You are advised that under the provisions of the above contract(s) or subcontract(s) and in accordance the Executive Order No. 11246, Section 202, dated September 24, 1965, the undersigned is obliged not to discriminate against any employee or applicant for employment because of race, color, creed, or national origin. This obligation not to discriminate in employment includes, but is not limited to, the following:

HIRING, PLACEMENT, UPGRADING, TRANSFER OR DEMOTION,

RECRUITMENT, ADVERTISING, OR SOLICITATION FOR

EMPLOYMENT, TRAINING DURING EMPLOYMENT, RATES OF

PAY OR OTHER FORMS OF COMPENSATION, SELECTION FOR

TRAINING INCLUDING APPRENTICESHIP, LAYOFF, OR TERMINATION.

This notice is furnished to you pursuant to the provisions of the above contract(s) or subcontract(s) and Executive Order No. 11246.

_____

_____

_____

_____
(Contractor or Subcontractor)

CERTIFICATION OF NONSEGREGATED FACILITIES

(Applicable to contracts, subcontracts, and agreements with Applicants who are themselves performing federally assisted construction contracts, exceeding $10,000 which are not exempt from the provisions of the Equal Opportunity clause).

By submission of this bid, the bidder, offeror, applicant, or subcontractor certifies that he does not maintain or provide for his employees any segregated facilities at any of his establishments, and that he does not permit his employees to perform their services at any location, under his control, where segregated facilities are maintained. He certifies further that he will not maintain or provide for his employees any segregated facilities at any of his establishments, and that he will not permit his employees to perform their services at any location, under his control, where segregated facilities are maintained; provided that separate or single user restrooms and necessary dressing or sleeping areas shall be provided to assure privacy between the sexes. The bidder, offeror, applicant, or subcontractor agrees that a breach of this certification is a violation of the Equal Opportunity clause in this contract. As used in this certificate, the term "segregated facilities" means any waiting rooms, work areas, rest rooms and wash rooms, restaurants and other eating areas, time clocks, locker rooms and other storage or dressing areas, parking lots, drinking fountains, recreation and entertainment areas, transportation, and housing facilities provided for employees which are segregated by explicit directive or are in fact segregated on the basis of race, creed, color, or national origin, because of habit, local custom, or otherwise. He further agrees that (except where he has obtained identical certifications from proposed subcontractors for specific time periods) he will obtain identical certifications from proposed subcontractors prior to the award of subcontracts exceeding $10,000 which are not exempt from the provisions of the Equal Opportunity clause; that he will retain such certifications in his files, and that he will forward the following notice to such proposed subcontractors (except where the proposed subcontractors have submitted identical certifications for specific time periods).

SAMPLE

(Signature) (Date)

SAMPLE FORM
DO NOT SIGN

(Name and Title of Signer-Please Print)

Original signature page is included in the Bid section of this Document.

Appendix H

DAVIS-BACON (DB) PREVAILING WAGE REQUIREMENTS FOR ARRA FUND RECIPIENTS

The Recipient acknowledges and hereby agrees to comply with the Wage Rate Requirements under Section 1606 of ARRA, which are hereby restated in pertinent part as follows:

Preamble

Section 1606 of ARRA requires that all laborers and mechanics employed by contractors and subcontractors on projects funded directly by or assisted in whole or in part by and through the Federal Government pursuant to ARRA shall be paid wages at rates not less than those prevailing on projects of a character similar in the locality as determined by the Secretary of Labor in accordance with subchapter IV of chapter 31 of title 40, United States Code.

Pursuant to Reorganization Plan No. 14 and the Copeland Act, 40 U.S.C. 3145, the Department of Labor has issued regulations at 29 CFR Parts 1, 3, and 5 to implement the Davis-Bacon (DB) and related Acts. Regulations in 29 CFR 5.5 instruct agencies concerning application of the standard DB contract clauses set forth in that section. Federal agencies providing grants, cooperative agreements, and loans under ARRA shall ensure that the standard DB contract clauses found in 29 CFR 5.5(a) are incorporated in any resultant covered contracts that are in excess of $2,000 for construction, alteration or repair (including painting and decorating).

With respect to the Clean Water and Safe Drinking Water State revolving Funds, EPA provides capitalization grants to the State which in turn, through the Corporation, provides subgrants or loans to eligible entities within the State (Recipient(s)). Typically, the Recipients are municipal or other local governmental entities. For these types of Recipients, the provisions set forth under Roman Numeral I, below, shall apply. Although EPA and the State remain responsible for ensuring Recipients' compliance with the wage rate requirements set forth herein, those Recipients shall have the primary responsibility to maintain payroll records as described in Section 3(ii)(A), below and for compliance as described in Section I-5.

I. Requirements under Section 1606 of the American Recovery and Reinvestment Act For Recipients That Are Governmental Entities

The following terms and conditions specify how the Corporation and governmental Recipients will meet its DB responsibilities under. If a Recipient has questions regarding when DB applies, obtaining the correct DB wage determinations, DB provisions, or compliance monitoring, it may contact the Corporation. The Corporation or Recipient may also obtain additional guidance from the web site of the Department of Labor (DOL) at http://www.dol.gov/esa/whd/recovery/.

1. Applicability of the Davis-Bacon (DB) prevailing wage requirements.

Davis-Bacon prevailing wage requirements apply to the construction, alteration, and repair activity of infrastructure, including all construction, alteration and repair activity involving waste water or drinking water treatment plants as subject to DB. If a Recipient encounters a unique situation at a site that presents uncertainties regarding DB applicability, the Recipient must discuss the situation with the Corporation before authorizing work on that site.

2. Obtaining Wage Determinations.

(a). Recipients shall obtain the wage determination for the locality in which a covered activity subject to DB will take place prior to issuing requests for bids, proposals, quotes or other methods for soliciting contracts (solicitation) for activities subject to DB. These wage determinations shall be

incorporated into solicitations and any subsequent contracts. Prime contracts must contain a provision requiring that subcontractors follow the wage determination incorporated into the prime contract.

(i) While the solicitation remains open, the Recipient shall monitor www.wdol.gov. on a weekly basis to ensure that the wage determination contained in the solicitation remains current. The Recipients shall amend the solicitation if DOL issues a modification more than 10 days prior to the closing date (i.e. bid opening) for the solicitation. If DOL modifies or supersedes the applicable wage determination less than 10 days prior to the closing date, the Recipients may request a finding from the Corporation that there is not a reasonable time to notify interested contractors of the modification of the wage determination. The Corporation will provide a report of its findings to the Recipient.

(ii) If the Recipient does not award the contract within 90 days of the closure of the solicitation, any modifications or supersedes DOL makes to the wage determination contained in the solicitation shall be effective unless the Corporation, at the request of the Recipient, obtains an extension of the 90 day period from DOL pursuant to 29 CFR 1.6(c)(3)(iv). The Recipient shall monitor www.wdol.gov on a weekly basis if it does not award the contract within 90 days of closure of the solicitation to ensure that wage determinations contained in the solicitation remain current.

(b). If the Recipient carries out activity subject to DB by issuing a task order, work assignment or similar instrument to an existing contractor (ordering instrument) rather than by publishing a solicitation, the Recipient shall insert the appropriate DOL wage determination from www.wdol.gov into the ordering instrument.

(c). Recipient shall review all subcontracts subject to DB entered into by prime contractors to verify that the prime contractor has required its subcontractors to include the applicable wage determinations.

(d). As provided in 29 CFR 1.6(f), DOL may issue a revised wage determination applicable to a Recipient's contract after the award of a contract or the issuance of an ordering instrument if DOL determines that the Recipient has failed to incorporate a wage determination or has used a wage determination that clearly does not apply to the contract or ordering instrument. If this occurs, the Recipient shall either terminate the contract or ordering instrument and issue a revised solicitation or ordering instrument or incorporate DOL's wage determination retroactive to the beginning of the contract or ordering instrument by change order. The Recipient's contractor must be compensated for any increases in wages resulting from the use of DOL's revised wage determination.

3. Contract and Subcontract provisions.

(a) The Recipient(s) shall insert in full in any contract in excess of $2,000 which is entered into for the actual construction, alteration and/or repair, including painting and decorating, of a public building or public work, or building or work financed in whole or in part from Federal funds or in accordance with guarantees of a Federal agency or financed from funds obtained by pledge of any contract of a Federal agency to make a loan, grant or annual contribution (except where a different meaning is expressly indicated), and which is subject to the labor standards provisions of any of the acts listed in § 5.1, the following clauses:

(1) Minimum wages.

(i) All laborers and mechanics employed or working upon the site of the work will be paid unconditionally and not less often than once a week, and without subsequent deduction or rebate on any account (except such payroll deductions as are permitted by regulations issued by the Secretary of Labor under the Copeland Act (29 CFR part 3)), the full amount of wages and bona fide fringe benefits (or cash equivalents thereof) due at time of payment computed at rates not less than those contained in the wage determination of the Secretary of Labor which is attached hereto and made a part hereof, regardless of any contractual relationship which may be alleged to exist between the contractor and such laborers and mechanics.

Contributions made or costs reasonably anticipated for bona fide fringe benefits under section 1(b)(2) of the Davis-Bacon Act on behalf of laborers or mechanics are considered wages paid to such laborers or mechanics, subject to the provisions of paragraph (a)(1)(iv) of this section; also, regular contributions made or costs incurred for more than a weekly period (but not less often than quarterly) under plans, funds, or programs which cover the particular weekly period, are deemed to be constructively made or incurred during such weekly period. Such laborers and mechanics shall be paid the appropriate wage rate and fringe benefits on the wage determination for the classification of work actually performed, without regard to skill, except as provided in § 5.5(a)(4). Laborers or mechanics performing work in more than one classification may be compensated at the rate specified for each classification for the time actually worked therein: Provided, That the employer's payroll records accurately set forth the time spent in each classification in which work is performed. The wage determination (including any additional classification and wage rates conformed under paragraph (a)(1)(ii) of this section) and the Davis-Bacon poster (WH-1321) shall be posted at all times by the contractor and its subcontractors at the site of the work in a prominent and accessible place where it can be easily seen by the workers.

Recipients may obtain wage determinations from the U.S. Department of Labor's web site, www.wdol.gov.

(ii)(A) The Recipient(s), on behalf of EPA, shall require that any class of laborers or mechanics, including helpers, which is not listed in the wage determination and which is to be employed under the contract shall be classified in conformance with the wage determination. The EPA award official shall approve an additional classification and wage rate and fringe benefits therefore only when the following criteria have been met:

(1) The work to be performed by the classification requested is not performed by a classification in the wage determination; and

(2) The classification is utilized in the area by the construction industry; and

(3) The proposed wage rate, including any bona fide fringe benefits, bears a reasonable relationship to the wage rates contained in the wage determination.

(B) If the contractor and the laborers and mechanics to be employed in the classification (if known), or their representatives, and the Recipient(s) agree on the classification and wage rate (including the amount designated for fringe benefits where appropriate), a report of the action taken shall be sent by the Recipient(s) to the State award official. The State award official will transmit the report, to the Administrator of the Wage and Hour Division, Employment Standards Administration, U.S. Department of Labor, Washington, DC 20210. The Administrator, or an authorized representative, will approve, modify, or disapprove every additional classification action within 30 days of receipt and so advise the State award official or will notify the State award official within the 30-day period that additional time is necessary.

(C) In the event the contractor, the laborers or mechanics to be employed in the classification or their representatives, and the and the Recipient(s) do not agree on the proposed classification and wage rate (including the amount designated for fringe benefits, where appropriate), the award official shall refer the questions, including the views of all interested parties and the recommendation of the State award official, to the Administrator for determination. The Administrator, or an authorized representative, will issue a determination within 30 days of receipt and so advise the contracting officer or will notify the contracting officer within the 30-day period that additional time is necessary.

(D) The wage rate (including fringe benefits where appropriate) determined pursuant to paragraphs (a)(1)(ii)(B) or (C) of this section, shall be paid to all workers performing work in the classification under this contract from the first day on which work is performed in the classification.

(iii) Whenever the minimum wage rate prescribed in the contract for a class of laborers or mechanics includes a fringe benefit which is not expressed as an hourly rate, the contractor shall either pay the benefit as stated in the wage determination or shall pay another bona fide fringe benefit or an hourly cash equivalent thereof.

(iv) If the contractor does not make payments to a trustee or other third person, the contractor may consider as part of the wages of any laborer or mechanic the amount of any costs reasonably anticipated in providing bona fide fringe benefits under a plan or program, Provided, That the Secretary of Labor has found, upon the written request of the contractor, that the applicable standards of the Davis-Bacon Act have been met. The Secretary of Labor may require the contractor to set aside in a separate account assets for the meeting of obligations under the plan or program.

(2) Withholding.

The Recipient(s), shall upon written request of the EPA Award Official or an authorized representative of the Department of Labor, withhold or cause to be withheld from the contractor under this contract or any other Federal contract with the same prime contractor, or any other federally-assisted contract subject to Davis-Bacon prevailing wage requirements, which is held by the same prime contractor, so much of the accrued payments or advances as may be considered necessary to pay laborers and mechanics, including apprentices, trainees, and helpers, employed by the contractor or any subcontractor the full amount of wages required by the contract. In the event of failure to pay any laborer or mechanic, including any apprentice, trainee, or helper, employed or working on the site of the work, all or part of the wages required by the contract, the (Agency) may, after written notice to the contractor, sponsor, applicant, or owner, take such action as may be necessary to cause the suspension of any further payment, advance, or guarantee of funds until such violations have ceased.

(3) Payrolls and basic records.

(i) Payrolls and basic records relating thereto shall be maintained by the contractor during the course of the work and preserved for a period of three years thereafter for all laborers and mechanics working at the site of the work. Such records shall contain the name, address, and social security number of each such worker, his or her correct classification, hourly rates of wages paid (including rates of contributions or costs anticipated for bona fide fringe benefits or cash equivalents thereof of the types described in section 1(b)(2)(B) of the Davis-Bacon Act), daily and weekly number of hours worked, deductions made and actual wages paid. Whenever the Secretary of Labor has found under 29 CFR 5.5(a)(1)(iv) that the wages of any laborer or mechanic include the amount of any costs reasonably anticipated in providing benefits under a plan or program described in section 1(b)(2)(B) of the Davis-Bacon Act, the contractor shall maintain records which show that the commitment to

provide such benefits is enforceable, that the plan or program is financially responsible, and that the plan or program has been communicated in writing to the laborers or mechanics affected, and records which show the costs anticipated or the actual cost incurred in providing such benefits. Contractors employing apprentices or trainees under approved programs shall maintain written evidence of the registration of apprenticeship programs and certification of trainee programs, the registration of the apprentices and trainees, and the ratios and wage rates prescribed in the applicable programs.

(ii)(A) The contractor shall submit weekly, for each week in which any contract work is performed, a copy of all payrolls to the Recipient, that is, the entity that receives the sub-grant or loan from the Corporation. Such documentation shall be available on request of the Corporation or EPA. As to each payroll copy received, the Recipient shall provide written confirmation in a form satisfactory to the State indicating whether or not the project is in compliance with the requirements of 29 CFR 5.5(a)(1) based on the most recent payroll copies for the specified week. The payrolls shall set out accurately and completely all of the information required to be maintained under 29 CFR 5.5(a)(3)(i), except that full social security numbers and home addresses shall not be included on the weekly payrolls. Instead the payrolls shall only need to include an individually identifying number for each employee (e.g., the last four digits of the employee's social security number). The required weekly payroll information may be submitted in any form desired. Optional Form WH-347 is available for this purpose from the Wage and Hour Division Web site at http://www.dol.gov/esa/whd/forms/wh347instr.htm or its successor site. The prime contractor is responsible for the submission of copies of payrolls by all subcontractors. Contractors and subcontractors shall maintain the full social security number and current address of each covered worker, and shall provide them upon request to the Recipient(s) for transmission to the State or EPA if requested by EPA, the State, the contractor, or the Wage and Hour Division of the Department of Labor for purposes of an investigation or audit of compliance with prevailing wage requirements. It is not a violation of this section for a prime contractor to require a subcontractor to provide addresses and social security numbers to the prime contractor for its own records, without weekly submission to the Recipient(s).

(B) Each payroll submitted shall be accompanied by a "Statement of Compliance," signed by the contractor or subcontractor or his or her agent who pays or supervises the payment of the persons employed under the contract and shall certify the following:

(1) That the payroll for the payroll period contains the information required to be provided under § 5.5 (a)(3)(ii) of Regulations, 29 CFR part 5, the appropriate information is being maintained under § 5.5 (a)(3)(i) of Regulations, 29 CFR part 5, and that such information is correct and complete;

(2) That each laborer or mechanic (including each helper, apprentice, and trainee) employed on the contract during the payroll period has been paid the full weekly wages earned, without rebate, either directly or indirectly, and that no deductions have been made either directly or indirectly from the full wages earned, other than permissible deductions as set forth in Regulations, 29 CFR part 3;

(3) That each laborer or mechanic has been paid not less than the applicable wage rates and fringe benefits or cash equivalents for the classification of work performed, as specified in the applicable wage determination incorporated into the contract.

(C) The weekly submission of a properly executed certification set forth on the reverse side of Optional Form WH-347 shall satisfy the requirement for submission of the "Statement of Compliance" required by paragraph (a)(3)(ii)(B) of this section.

(D) The falsification of any of the above certifications may subject the contractor or subcontractor to civil or criminal prosecution under section 1001 of title 18 and section 231 of title 31 of the United States Code.

(iii) The contractor or subcontractor shall make the records required under paragraph (a)(3)(i) of this section available for inspection, copying, or transcription by authorized representatives of the State, EPA or the Department of Labor, and shall permit such representatives to interview employees during working hours on the job. If the contractor or subcontractor fails to submit the required records or to make them available, the Federal agency or State may, after written notice to the contractor, sponsor, applicant, or owner, take such action as may be necessary to cause the suspension of any further payment, advance, or guarantee of funds. Furthermore, failure to submit the required records upon request or to make such records available may be grounds for debarment action pursuant to 29 CFR 5.12.

(4) Apprentices and trainees--

(i) Apprentices. Apprentices will be permitted to work at less than the predetermined rate for the work they performed when they are employed pursuant to and individually registered in a bona fide apprenticeship program registered with the U.S. Department of Labor, Employment and Training Administration, Office of Apprenticeship Training, Employer and Labor Services, or with a State Apprenticeship Agency recognized by the Office, or if a person is employed in his or her first 90 days of probationary employment as an apprentice in such an apprenticeship program, who is not individually registered in the program, but who has been certified by the Office of Apprenticeship Training, Employer and Labor Services or a State Apprenticeship Agency (where appropriate) to be eligible for probationary employment as an apprentice. The allowable ratio of apprentices to journeymen on the job site in any craft classification shall not be greater than the ratio permitted to the contractor as to the entire work force under the registered program. Any worker listed on a payroll at an apprentice wage rate, who is not registered or otherwise employed as stated above, shall be paid not less than the applicable wage rate on the wage determination for the classification of work actually performed. In addition, any apprentice performing work on the job site in excess of the ratio permitted under the registered program shall be paid not less than the applicable wage rate on the wage determination for the work actually performed. Where a contractor is performing construction on a project in a locality other than that in which its program is registered, the ratios and wage rates (expressed in percentages of the journeyman's hourly rate) specified in the contractor's or subcontractor's registered program shall be observed. Every apprentice must be paid at not less than the rate specified in the registered program for the apprentice's level of progress, expressed as a percentage of the journeymen hourly rate specified in the applicable wage determination. Apprentices shall be paid fringe benefits in accordance with the provisions of the apprenticeship program. If the apprenticeship program does not specify fringe benefits, apprentices must be paid the full amount of fringe benefits listed on the wage determination for the applicable classification. If the Administrator determines that a different practice prevails for the applicable apprentice classification, fringes shall be paid in accordance with that determination. In the event the Office of Apprenticeship Training, Employer and Labor Services, or a State Apprenticeship Agency recognized by the Office, withdraws approval of an apprenticeship program, the contractor will no longer be permitted to utilize apprentices at less than the applicable predetermined rate for the work performed until an acceptable program is approved.

(ii) Trainees. Except as provided in 29 CFR 5.16, trainees will not be permitted to work at less than the predetermined rate for the work performed unless they are employed pursuant to and individually registered in a program which has received prior approval, evidenced by formal certification by the U.S. Department of Labor, Employment and Training Administration. The ratio of trainees to journeymen on the job site shall not be greater than permitted under the plan approved by the

Employment and Training Administration. Every trainee must be paid at not less than the rate specified in the approved program for the trainee's level of progress, expressed as a percentage of the journeyman hourly rate specified in the applicable wage determination. Trainees shall be paid fringe benefits in accordance with the provisions of the trainee program. If the trainee program does not mention fringe benefits, trainees shall be paid the full amount of fringe benefits listed on the wage determination unless the Administrator of the Wage and Hour Division determines that there is an apprenticeship program associated with the corresponding journeyman wage rate on the wage determination which provides for less than full fringe benefits for apprentices. Any employee listed on the payroll at a trainee rate who is not registered and participating in a training plan approved by the Employment and Training Administration shall be paid not less than the applicable wage rate on the wage determination for the classification of work actually performed. In addition, any trainee performing work on the job site in excess of the ratio permitted under the registered program shall be paid not less than the applicable wage rate on the wage determination for the work actually performed. In the event the Employment and Training Administration withdraws approval of a training program, the contractor will no longer be permitted to utilize trainees at less than the applicable predetermined rate for the work performed until an acceptable program is approved.

(iii) Equal employment opportunity. The utilization of apprentices, trainees and journeymen under this part shall be in conformity with the equal employment opportunity requirements of Executive Order 11246, as amended, and 29 CFR part 30.

(5) Compliance with Copeland Act requirements. The contractor shall comply with the requirements of 29 CFR part 3, which are incorporated by reference in this contract.

(6) Subcontracts. The contractor or subcontractor shall insert in any subcontracts the clauses contained in 29 CFR 5.5(a)(1) through (10) and such other clauses as the EPA determines may by appropriate, and also a clause requiring the subcontractors to include these clauses in any lower tier subcontracts. The prime contractor shall be responsible for the compliance by any subcontractor or lower tier subcontractor with all the contract clauses in 29 CFR 5.5.

(7) Contract termination: debarment. A breach of the contract clauses in 29 CFR 5.5 may be grounds for termination of the contract, and for debarment as a contractor and a subcontractor as provided in 29 CFR 5.12.

(8) Compliance with Davis-Bacon and Related Act requirements. All rulings and interpretations of the Davis-Bacon and Related Acts contained in 29 CFR parts 1, 3, and 5 are herein incorporated by reference in this contract.

(9) Disputes concerning labor standards. Disputes arising out of the labor standards provisions of this contract shall not be subject to the general disputes clause of this contract. Such disputes shall be resolved in accordance with the procedures of the Department of Labor set forth in 29 CFR parts 5, 6, and 7. Disputes within the meaning of this clause include disputes between the contractor (or any of its subcontractors) and Recipient(s), State, EPA, the U.S. Department of Labor, or the employees or their representatives.

(10) Certification of eligibility.

(i) By entering into this contract, the contractor certifies that neither it (nor he or she) nor any person or firm who has an interest in the contractor's firm is a person or firm ineligible to be awarded Government contracts by virtue of section 3(a) of the Davis-Bacon Act or 29 CFR 5.12(a)(1).

(ii) No part of this contract shall be subcontracted to any person or firm ineligible for award of a Government contract by virtue of section 3(a) of the Davis-Bacon Act or 29 CFR 5.12(a)(1).

(iii) The penalty for making false statements is prescribed in the U.S. Criminal Code, 18 U.S.C. 1001.

4. **Contract Provision for Contracts in Excess of $100,000.**

(a) Contract Work Hours and Safety Standards Act. The Recipient shall insert the following clauses set forth in paragraphs (a)(1), (2), (3), and (4) of this section in full in any contract in an amount in excess of $100,000 and subject to the overtime provisions of the Contract Work Hours and Safety Standards Act. These clauses shall be inserted in addition to the clauses required by Item 3, above or 29 CFR 4.6. As used in this paragraph, the terms laborers and mechanics include watchmen and guards.

(1) Overtime requirements. No contractor or subcontractor contracting for any part of the contract work which may require or involve the employment of laborers or mechanics shall require or permit any such laborer or mechanic in any workweek in which he or she is employed on such work to work in excess of forty hours in such workweek unless such laborer or mechanic receives compensation at a rate not less than one and one-half times the basic rate of pay for all hours worked in excess of forty hours in such workweek.

(2) Violation; liability for unpaid wages; liquidated damages. In the event of any violation of the clause set forth in paragraph (a)(1) of this section the contractor and any subcontractor responsible therefore shall be liable for the unpaid wages. In addition, such contractor and subcontractor shall be liable to the United States (in the case of work done under contract for the District of Columbia or a territory, to such District or to such territory), for liquidated damages. Such liquidated damages shall be computed with respect to each individual laborer or mechanic, including watchmen and guards, employed in violation of the clause set forth in paragraph (a)(1) of this section, in the sum of $10 for each calendar day on which such individual was required or permitted to work in excess of the standard workweek of forty hours without payment of the overtime wages required by the clause set forth in paragraph (a)(1) of this section.

(3) Withholding for unpaid wages and liquidated damages. The Recipient, upon written request of the EPA Award Official or an authorized representative of the Department of Labor, shall withhold or cause to be withheld, from any moneys payable on account of work performed by the contractor or subcontractor under any such contract or any other Federal contract with the same prime contractor, or any other federally-assisted contract subject to the Contract Work Hours and Safety Standards Act, which is held by the same prime contractor, such sums as may be determined to be necessary to satisfy any liabilities of such contractor or subcontractor for unpaid wages and liquidated damages as provided in the clause set forth in paragraph (b)(2) of this section.

(4) Subcontracts. The contractor or subcontractor shall insert in any subcontracts the clauses set forth in paragraph (a)(1) through (4) of this section and also a clause requiring the subcontractors to include these clauses in any lower tier subcontracts. The prime contractor shall be responsible for compliance by any subcontractor or lower tier subcontractor with the clauses set forth in paragraphs (a)(1) through (4) of this section.

(b) In addition to the clauses contained in Item 3, above, in any contract subject only to the Contract Work Hours and Safety Standards Act and not to any of the other statutes cited in 29 CFR 5.1, the Recipient shall insert a clause requiring that the contractor or subcontractor shall maintain payrolls and basic payroll records during the course of the work and shall preserve them for a period of three years from the completion of the contract for all laborers and mechanics, including guards and

watchmen, working on the contract. Such records shall contain the name and address of each such employee, social security number, correct classifications, hourly rates of wages paid, daily and weekly number of hours worked, deductions made, and actual wages paid. Further, the Recipient shall insert in any such contract a clause providing that the records to be maintained under this paragraph shall be made available by the contractor or subcontractor for inspection, copying, or transcription by authorized representatives of the (write the name of agency) and the Department of Labor, and the contractor or subcontractor will permit such representatives to interview employees during working hours on the job.

5. Compliance Verification

(a). The Recipient shall periodically interview a sufficient number of employees entitled to DB prevailing wages (covered employees) to verify that contractors or subcontractors are paying the appropriate wage rates. As provided in 29 CFR 5.6(a)(6), all interviews must be conducted in confidence. The Recipient must use Standard Form 1445 or equivalent documentation to memorialize the interviews. Copies of the SF 1445 are available from EPA on request.

(b). The Recipient shall establish and follow an interview schedule based on its assessment of the risks of noncompliance with DB posed by contractors or subcontractors and the duration of the contract or subcontract. At a minimum, the Recipient must conduct interviews with a representative group of covered employees within two weeks of each contractor or subcontractor's submission of its initial weekly payroll data and two weeks prior to the estimated completion date for the contract or subcontract. Recipients must conduct more frequent interviews if the initial interviews or other information indicates that there is a risk that the contractor or subcontractor is not complying with DB. Recipients shall immediately conduct necessary interviews in response to an alleged violation of the prevailing wage requirements. All interviews shall be conducted in confidence.

(c). The Recipient shall periodically conduct spot checks of a representative sample of weekly payroll data to verify that contractors or subcontractors are paying the appropriate wage rates. The Recipient shall establish and follow a spot check schedule based on its assessment of the risks of noncompliance with DB posed by contractors or subcontractors and the duration of the contract or subcontract. At a minimum, the Recipient must spot check payroll data within two weeks of each contractor or subcontractor's submission of its initial payroll data and two weeks prior to the completion date the contract or subcontract. Recipients must conduct more frequent spot checks if the initial spot check or other information indicates that there is a risk that the contractor or subcontractor is not complying with DB. In addition, during the examinations the Recipient shall verify evidence of fringe benefit plans and payments thereunder by contractors and subcontractors who claim credit for fringe benefit contributions.

(d). The Recipient shall periodically review contractors and subcontractors use of apprentices and trainees to verify registration and certification with respect to apprenticeship and training programs approved by either the U.S Department of Labor or a state, as appropriate, and that contractors and subcontractors are not using disproportionate numbers of, laborers, trainees and apprentices. These reviews shall be conducted in accordance with the schedules for spot checks and interviews described in Item 5(b) and (c) above.

(e). Recipients must immediately report potential violations of the DB prevailing wage requirements to the EPA DB contact listed above and to the appropriate DOL Wage and Hour District Office listed at http://www.dol.gov/esa/contacts/whd/america2.htm.

General Decision Number: NY100017 03/12/2010 NY17

Superseded General Decision Number: NY20080017

State: New York

Construction Types: Building, Heavy and Highway

County: Onondaga County in New York.

BUILDING CONSTRUCTION PROJECTS (excluding single family homes and apartments up to and including 4 stories), HEAVY AND HIGHWAY CONSTRUCTION PROJECTS

Modification Number	Publication Date
0	03/12/2010

* BRNY0002-016 07/01/2009

SYRACUSE CHAPTER

	Rates	Fringes
BRICKLAYER		
BRICKLAYERS, CEMENT MASONS, POINTER, CLEANERS & CAULKERS	$ 25.08	13.68
HEAVY & HIGHWAY CONSTRUCTION		
Cement Masons	$ 27.87	15.04+a
MARBLE, TILE & TERRAZZO FINISHERS	$ 20.09	13.27
MARBLE, TILE & TERRAZZO WORKERS	$ 23.24	13.72

FOOTNOTE:

a. PAID HOLIDAYS: Memorial Day, July the 4th, Labor Day, Thankgiving Day (provided the employee is employed (1) day before and (1) day after the holiday.

CARP0747-002 07/01/2009

	Rates	Fringes
Carpenters:		
BUILDING CONSTRUCTION		
Carpenters, including Drywall Hanging	$ 24.29	12.77
Millwright	$ 24.29	12.77
Piledriver	$ 24.29	12.77
HEAVY & HIGHWAY CONSTRUCTION		
Carpenter	$ 28.07	12.77

ELEC0043-007 06/01/2009

ALL OF ONONDAGA COUNTY EXCEPT ELBRIDGE AND SKANEATELES

	Rates	Fringes
ELECTRICIAN	$ 30.00	16.52

ELEC0840-004 06/01/2009

REMAINDER OF ONONDAGA COUNTY (ELBRIDGE AND SKANCATELES)

	Rates	Fringes
ELECTRICIAN	$ 28.50	15.83

ELEC1249-003 05/04/2009

	Rates	Fringes
LINE CONSTRUCTION: Lineman (LIGHTING AND TRAFFIC SIGNAL Including any and all Fiber Optic Cable necessary for Traffic Signal Systems, Traffic Monitoring systems and Road Weather information systems)		
Flagman	$ 22.25	13.50+6.5%+a
Groundman Digging Machine Operator	$ 32.74	11.75+6.5%+a
Groundman Truck Driver (tractor trailer unit)	$ 31.52	13.50+6.5%+a
Groundman Truck Driver	$ 29.66	13.50+6.5%+a
Lineman & Technician	$ 37.08	13.50+6.5%+a
Mechanic	$ 29.66	13.50+6.5%+a

FOOTNOTE:

a. New Year's Day, Memorial Day, Independence Day, Labor Day, Thanksgiving Day, Christmas Day, plus President's Day, Good Friday, Decoration Day, Election Day for the President of the United States and Election Day for the Governor of the State of New York, provided the employee works the day before or the day after the holiday.

ELEC1249-004 05/04/2009

	Rates	Fringes
Line Construction: Overhead and underground distribution and maintenance work and all overhead and underground transmission line work including any and all fiber optic ground wire, fiber optic shield wire or any other like product by any other name manufactured for the dual purpose of ground fault protection and fiber optic		

capabilities (where no other trades are or have been involved):		
Cable Splicer	$ 44.67	13.50+7%+a
Flagman	$ 24.37	13.50+7%+a
Groundman digging machine operator	$ 36.55	13.50+7%+a
Groundman truck driver (tractor trailer unit)	$ 34.52	13.50+7%+a
Groundman Truck driver	$ 32.49	13.50+7%+a
Lineman and Technician	$ 40.61	13.50+7%+a
Mechanic	$ 32.49	13.50+7%+a
Overhead transmission line work (where 40.09other trades are or have been involved):		
Cable Splicer	$ 46.41	12.00+7%+a
Overhead transmission line work (where other trades are or have been involved):		
Cable Splicer	$ 47.44	13.50+7%+a
Flagman	$ 25.88	13.50+7%+a
Groundman digging machine operator	$ 38.82	13.50+7%+a
Groundman truck driver (tractor trailer unit)	$ 36.66	13.50+7%+a
Groundman truck driver	$ 34.50	13.50+7%+a
Lineman and Technician	$ 43.13	13.50+7%+a
Mechanic	$ 34.50	13.50+7%+a
Substation:		
Cable Splicer	$ 44.67	13.50+7%+a
Flagman	$ 24.37	13.50+7%+a
Ground man truck driver	$ 32.49	13.50+7%+a
Groundman digging machine operator	$ 36.55	13.50+7%+a
Groundman truck driver (tractor trailer unit)	$ 34.52	13.50+7%+a
Lineman & Technician	$ 40.61	13.50+7%+a
Mechanic	$ 32.49	13.50+7%+a
Switching structures; railroad catenary installation and maintenance, third rail type underground fluid or gas filled transmission conduit and cable installations (including any and all fiber optic ground product by any other name manufactured for the dual purpose of ground fault protection and fiber optic capabilities), pipetype cable installation and maintenance jobs or projects, and maintenance bonding of rails; Pipetype cable installation		
Cable Splicer	$ 46.10	13.50+7%+a

Flagman	$ 25.15	13.50+7%+a
Groundman Digging Machine Operator	$ 37.72	13.50+7%+a
Groundman Truck Driver (tractor-trailer unit)	$ 35.62	13.50+7%+a
Groundman Truck Driver	$ 33.53	13.50+7%+a
Lineman & Technician	$ 38.87	11.75+7%+a
Mechanic	$ 33.53	13.50+7%+a
TELEPHONE, CATV FIBEROPTICS CABLE AND EQUIPMENT		
Cable splicer/Central Office Person	$ 23.07	3.05+3%
Groundman	$ 11.61	3.05+3%
Installer Repairman-Teledata		
Lineman/Tecnician-Equipment Operator	$ 21.91	3.05+3%
TREE TRIMMER	$ 18.92	4.05+3%+b

FOOTNOTE:

a. PAID HOLIDAYS: New Year's Day, Presidents' Day, Memorial Day, Good Friday, Independence Day, Labor Day, Thanksgiving Day, Christmas Day, and Election Day for the President of the United States and Election Day for the Governor of New York State, provided the employee works two days before or two days after the holiday.

b. New Years Day, Washington's Birthday, Good Friday, Decoration Day, Independence Day, Labor Day, Veteran's Day, Thanksgiving Day, Day after Thanksgiving Day and Christmas Day.

ENGI0545-002 07/01/2009

HEAVY & HIGHWAY

	Rates	Fringes
Power equipment operators:		
GROUP 1	$ 28.40	21.70+a
GROUP 2	$ 27.52	21.70+a
GROUP 3	$ 24.24	21.70+a
GROUP 4	$ 29.75	21.70+a

POWER EQUIPMENT OPERATORS CLASSIFICATIONS (HEAVY & HIGHWAY)

GROUP 1: Automated Concrete Spreader (CMI Type); Automatic Fine Grader; Backhoe (Except Tractor Mounted, Rubber Tired); Belt Placer (CMI Type); Blacktop Plant (Automated); Boom Truck 100' & over (jib and Boom); Cableway; Caisson Auger; Central Mix Concrete Plant (Automated); Cherry Picker (over 5 tons capacity); Concrete Curb Machine, Self-propelled, Slipform; Concrete Pump 8" and over; Crane; Derricks; Dragline; Dredge; Dual Drum Paver; Excavator (All Purpose-Hydraulically operated) (Gradall or Similar); Front End Loader (4cu. yd. and over); Head Tower (Sauerman or equal); Hoist (Two or Three Drum); Holland Loader; Hydrodemolition equipment (self contained); Maintenance

Engineer; Mine Hoist; Mucking Machine or Mole; Overhead Crane (Straddle Type); Pavement Profiler (over 300 horsepower); Pile Driver; Power Grader; Quad 9; Quarry Master (or equivalent); Scraper; Shovel; Side Boom; Slipform Paver (If a second man needed, he shall be an oiler); Tractor Drawn Belt-Type Loader; Truck Crane; Truck or Trailer Mounted Log Chipper (self Feeder); Tug Operator (Manned Rented Equipment Excluded); Tunnel shovel

GROUP 2: Bituminous Spreader and Mixer; Blacktop Plant (Non-Automated); Blast or Rotary Drill (Truck or Tractor Mounted); Boring machine; Cage Hoist; Central Mix Plant (Non Automated) and all Concrete Batching Plants; Cherry Picker (5 Tons capacity and under); Compressors (4 or less) exceeding 2,000 C.F.M. combined capacity; Concrete Paver (over 16s); Concrete Pump (under 8"); Crawler Drill (self-contained); Crusher; Diesel Power Unit; Drill Rigs, Tractor Mounted; Front End Loader (under 4 cu. yd.); Greaser man, Hi-Pressure Boiler (15 lbs. and over); Hoist (One Drum); Kolman Plant Loader & Similar Type Loaders; L.C.M. Work Boat Operator; Locomotive; Mixer (for stabilizad base self- propelled); Monorail Machine; Plant Engineer; Pump Crete; Ready Mix Concrete Plant; Refrigeration Equipment (for soil stablization); Road Widener; Roller (all above sub-grade); Sea Mule; Seamule; Tractor with Dozer and/or Pusher; Trecher; Tugger Hoist; Welder; Winch; Winch Cat

GROUP 3: A Frame Truck; Ballast Regulator, Ride on; Compressors (4 not to exceed 2,000 c.f.m. combined capacity; or 3 or less with more than 1,200 c.f.m. but not to exceed 2,000 c.f.m.); Compressors, Dust Collectors, Generators Pumps, Welding Machines, Light Plants (4 of any type or combination); Concrete Pavement Spreader and Finishers; Conveyer; Drill (core); Electric Pump used in conjunction with well-point system; Farm Tractor with accessories; Fine grade machine; Fork lift (under 15 ft.); Grout Pump; Gunite Machine; Hammers (Hydraulic self-propelled); Hydra Spiker, ride on; Hydro-blaster (water); Post Hole Digger and Post Driver; Power Sweeper; Roller (Grader and fill); Scarifier, ride on; Span-Saw, ride on; Submersible Electric Pump (when used in lieu of well point system); Tamper, ride on; Tie extractor, ride on; Tie Handler; Tie Inserter, ride on; Tie Spacer, ride on; Track Liner, ride on; Tractor with towed accessories; Vibatory Compactor; Well Point; Vibro Tamp

GROUP 4: Master Mechanic

PREMIUMS: Hazmat Work 2.50

CRANE PREMIUMS (Add to Group 1 Rate)

Tower Crane (under 115 ft)	1.00
Boom length incl. jib over 115 - 149 ft	2.50
Boom length incl. jib over 150 ft	3.50

FOOTNOTE:

a. New Year's Day, Memorial Day, Independence Day, Labor

Day, Thanksgiving Day, Christmas Day provided the employee has worked the working day before and the working day after the holiday.

ENGI0545-003 07/01/2009

	Rates	Fringes
Power equipment operators:		
TUNNEL AND SHAFT		
GROUP 1	$ 34.23	19.25+a
GROUP 2	$ 33.01	19.25+a
GROUP 3	$ 30.22	19.25+a
GROUP 4	$ 27.21	19.25+a
GROUP 5	$ 36.36	19.25+a

NOTE:

HAZMAT PREMIUM 5.00

POWER EQUIPMENT OPERATORS CLASSIFICATIONS (TUNNEL & SHAFT)

GROUP 1: Automated concrete spreader (CMI or equivalent), automated fine grade machine (CMI), backhoe, belt placer (CMI or similar), blacktop spreader (automated), cableway, caisson auger, central mix plant (automated), cherry picker (5 tons), concrete curb machine (self propelled slipform), concrete pump, crane; crane, shaft; crane, underground; cranes and derricks (steel erection), dragline, dredge, dual drum paver, excavator (all purpose-hydraulicly operated gradall or similar), fork lift (factor rated 15" and over), front end loader (4 cu. yd. and over), head tower (Sauerman or equal); hoist, shaft; hoist (two or three drum), holland loader, maintenance engineer (shaft and tunnel), mine hoist, mining machine (mole and similar types), mucking machine or mose overhead crane (gantry or straddle type), pile driver, power grader, Quad 9, quarry master (or equivalent), scraper, shovel, side boom, slip form paver, tripper/maintenance engineer (shaft and tunnel), tractor drawn belt-type loader, truck crane, truck engineer (shaft and tunnel), tractor drawn belt-type loader, truck crane, truck or trailer mounted log chipper (self feeder), tug operator (manned rented equipment excluded), tunnel shovel

GROUP 2: Automated central mix concrete plant, backhoe (top side), backhoe (tractor mounted, rubber tired), bitiminous spreader and mixer, blacktop plant (nonautomated), blast or rotary drill (truck or tractor mounted), boring machine, cage hoist, central mix plant (non automated) and all concrete batching plants, cherry picker (5 tons capacity and under), compressors (4 or less exceeding 2000 C.F.M. combined capacity, concrete paver (over 16s), concrete pump, crane (topside), crusher, diesel power unit, drill rigs, tractor mounted, front end loader (under 4 cu. yds), grayco epoxy machine, hi-pressure boiler (15 lbs and over), hoist (one drum) hoist (one drum) hoist, two or htree drum (topside), kolman plant loader and similar type loaders, L.C.M. work boat operator, locomotive, maintenance engineer

(topside) maintnenace greaseman, mixer (for stabilized base self-propelled), monorail machine,plant engineer, personnel hoist, pump crete, ready mix concrete plant, refrigeration equipment (for soil stabilization), road widener, roller (all above sub-grade),sea mule, shotcrete machine, shovel (topside), tractor with dozer and or pusher, trencher, tugger hoist, tunnel locomotive, welder, winch, winch cat

GROUP 3: A-Frame truck, ballast regulator (ride on), compressors (4 not to exceed 2000 c.f.m. combined capacity; or 3 or less with more than 1200 c.f.m. but not to exceed 2000 c.f.m.); compressors (any size but subject to other provisions for compressors, dust collectors, generators, pumps, welding machiens, light plants (4 of any type of combination); concrete pavement spreaders and finishers, conveyor, drill (core), drill (well), electric pump used in conjunction with well point system, farm tractor with accessories, fine grade machine, fork lift (under 15 ft), grout pump over 5 cu. ft. (manufacturers rating), gunite machine, hammers (hydraulic self propelled), hydra-spiker (ride on), hydra blaster (water), hydro blaster, motorized form carrier, post hole digger and post driver, power sweeper, roller (grade and fill), scarifer (ride on), span saw (ride on), submersible electric pump (when used in lieu of well points), tamper (ride on), tie extractor (ride on), tie handler (ride on), tie inserter (ride on), tie spacer (ride on), track liner (ride on), tractor with towed accessories, vibratory compactor, vibro tamp, well point

GROUP 4: Aggregate plant, boiler (used in conjunction with production), cement and bin operator, compressors (3 or less not to exceed 1200 c.f.m. combined capacity); compressors (any size, but subject to other provisions for compressors), dust colelctors, generators, pumps, welding machines, light plants (3 or less of any type or combination); concrete paver or mixer (16s and under), concrete saw (self propelled), fireman, form tamper, greaseman, hydraulic pump (jacking system), junior engineer, light plants, mulching machine, oilder, parapet concrete or pavement grinder, power broom (towed), power heaterman (when used for production), revinius widener, shell winder, steam cleaner, tractor

GROUP 5: Master mechanic and chief tunnel engineer

FOOTNOTE:

a. PAID HOLIDAYS: New Year's Day, Memorial Day, Independence Day, Labor Day, Thanksgiving Day, and Christmas Day, provided the employee has worked the working day before the holiday and the working day after the holiday.

ENGI0545-011 06/01/2009

	Rates	Fringes
Power equipment operators:		
GROUP 1	$ 27.23	18.80+a
GROUP 2	$ 25.51	18.80+a
GROUP 3	$ 22.07	18.80+a

POWER EQUIPMENT OPERATORS CLASSIFICATIONS (BUILDING)

GROUP 1: Backhoe, excavator (all purpose-hydraulically operated), fork lift (loed and lull and other rough terrain type), front end loader (4 c.y. and over), grader (power), hoist (2 or 3 drums), pile driver, scraper sea mule, tractor drawn belt type loader (Euclid loader),

GROUP 2: Bulldozer, cage hoist, fork lift (all others), front end loader (under 4 c.y.), carry-all scraper, tractor mounted hoist (one drum).

GROUP 3: Farm tractor with or without accessories, fine grade machine (not automated), tractor with or without towed accessories.

HAZMAT PREMIUM 2.50

FOOTNOTE:

a. New Years Day, Memorial Day, Independence Day, Labor Day, Thanksgiving Day, Christmas Day provided the employee has worked five consective working days before and the working day after the holiday.

LABO0633-003 07/01/2009

	Rates	Fringes
Laborers		
BUILDING CONSTRUCTION		
Asbestos and Toxic, Hazardous Waste Removal	$ 22.10	13.15
Laborer	$ 20.60	13.15

ASBESTOS REMOVAL: Removal of all asbestos containing materials from wall ceilings, floor columns, and other non-mechanical structures and surfaces.

LABO0633-004 07/01/2009

	Rates	Fringes
Laborers:		
HEAVY AND HIGHWAY CONSTRUCTION		
GROUP 1	$ 22.46	14.30+a
GROUP 2	$ 22.66	14.30+a
GROUP 3	$ 22.86	14.30+a
GROUP 4	$ 23.06	14.30+a

HEAVY AND HIGHWAY CONSTRUCTION

GROUP 1: Laborers, flaggers, outboar, and hand boats

GROUP 2: Bull floats, chain saw, concrete aggregate, bin concrete bootman, gin buggy, hand ormachine vibrator, jackhammer, mason tender, mortar mixer, pavement breaker, handlers of all steel mesh, small generators, for laborers

tools, installation of bridge drainage pipe, pipelayers, vibrator type rollers, tamper, drill, doctor, tail or screw operator on asphalt paver, water pump operator (1 1/2" and single diaphram), nozzle (asphalt, gunnite, seding and sandblasting), laborers on chain link fence erection, rock splitter and power unit, pusher type concrete saw and all other gas, electric, oil and air tool operators, wrecking laborers.

GROUP 3: All rock or drill machine operators (except quarry master and similar type), acetylene torch operators, asphalt raker, powderman.

GROUP 4: Blasters, for setter, stone or granite curb setters.

FOOTNOTE:
a. New Year's Day, Memorial Day, Independence Day, Labor Day, Thanksgiving Day, Christmas Day, provided the employee has worked the working day before and the working day after the holiday.

PAIN0004-020 08/01/2007

	Rates	Fringes
Painters:		
BUILDING CONSTRUCTION		
Brush & Roll, Drywall Taping/Finishing	$ 20.00	10.58
Spray, Sandblasting, Structural Steel	$ 20.50	10.58
HEAVY & HIGHWAY CONSTRUCTION		
Bridges	$ 31.00	16.10

PLUM0267-002 05/01/2008

	Rates	Fringes
Plumber, Pipefitter, Steamfitter (Including HVAC Work)	$ 28.11	15.62

ROOF0195-001 06/01/2009

	Rates	Fringes
ROOFER, Including Built Up, Composition and Single Ply Roofs	$ 23.50	14.57

SHEE0058-001 05/01/2009

	Rates	Fringes
Sheet Metal Worker		
Projects 10 million or less	$ 25.85	15.56
Projects over $10 million	$ 26.85	15.56

SUNY1996-001 01/10/1996

	Rates	Fringes
GLAZIER	$ 12.01	0.52

WELDERS - Receive rate prescribed for craft performing operation to which welding is incidental.

Unlisted classifications needed for work not included within the scope of the classifications listed may be added after award only as provided in the labor standards contract clauses (29CFR 5.5 (a) (1) (ii)).

In the listing above, the "SU" designation means that rates listed under the identifier do not reflect collectively bargained wage and fringe benefit rates. Other designations indicate unions whose rates have been determined to be prevailing.

WAGE DETERMINATION APPEALS PROCESS

1.) Has there been an initial decision in the matter? This can be:

* an existing published wage determination
* a survey underlying a wage determination
* a Wage and Hour Division letter setting forth a position on a wage determination matter
* a conformance (additional classification and rate) ruling

On survey related matters, initial contact, including requests for summaries of surveys, should be with the Wage and Hour Regional Office for the area in which the survey was conducted because those Regional Offices have responsibility for the Davis-Bacon survey program. If the response from this initial contact is not satisfactory, then the process described in 2.) and 3.) should be followed.

With regard to any other matter not yet ripe for the formal process described here, initial contact should be with the Branch of Construction Wage Determinations. Write to:

Branch of Construction Wage Determinations
Wage and Hour Division
U.S. Department of Labor
200 Constitution Avenue, N.W.
Washington, DC 20210

2.) If the answer to the question in 1.) is yes, then an interested party (those affected by the action) can request review and reconsideration from the Wage and Hour Administrator (See 29 CFR Part 1.8 and 29 CFR Part 7). Write to:

Wage and Hour Administrator

U.S. Department of Labor
200 Constitution Avenue, N.W.
Washington, DC 20210

The request should be accompanied by a full statement of the interested party's position and by any information (wage payment data, project description, area practice material, etc.) that the requestor considers relevant to the issue.

3.) If the decision of the Administrator is not favorable, an interested party may appeal directly to the Administrative Review Board (formerly the Wage Appeals Board). Write to:

Administrative Review Board
U.S. Department of Labor
200 Constitution Avenue, N.W.
Washington, DC 20210

4.) All decisions by the Administrative Review Board are final.

==========

END OF GENERAL DECISION

BID

FOR THE CONSTRUCTION OF CONTRACT NO. 6 – GENERAL

CSO 044 CONVEYANCE PROJECT

BID REFERENCE NO. 7022

TO THE COUNTY OF ONONDAGA, NEW YORK:

The Signer of this Bid declares:

That he has carefully examined the annexed form of the Agreement and all Contract Documents.

B-1.01 Certificate of Non-Collusion.

Pursuant to Section 103-d of the General Municipal Law, by submission of this bid or proposal, the bidder certifies that: a) This bid or proposal has been independently arrived at without collusion with any other bidder or with any competitor or potential competitor; b) This bid or proposal has not been knowingly disclosed and will not be knowingly disclosed, prior to the opening of bids or proposals for this Project, to any other bidder, competitor or potential competitor; c) No attempt has been or will be made to induce any other person, partnership or corporation to submit or not to submit a bid or proposal; d) The person signing this bid or proposal certifies that he has fully informed himself regarding the accuracy of the statements contained in this certification, and under the penalties of perjury, affirms the truth thereof, such penalties being applicable to the bidder as well as to the person signing in its behalf; e) That attached hereto (if a corporate bidder) is a certified copy of the resolution authorizing the execution of this certificate by the signator of this bid or proposal in behalf of the corporate bidder.

B-1.02 Bidder's Examination of Documents and Work Site

The undersigned Bidder hereby declares that he has carefully examined all Bidding and Contract Documents and that he has personally inspected the actual location of the Work, together with the local sources of supply, has satisfied himself as to all the quantities and conditions, and understands that in signing this Bid he waives all rights to plead any misunderstanding regarding the same.

B-1.03 Bidder's Acknowledgment of Contract Time and Liquidated Damages.

The undersigned Bidder agrees that, if the Bid is accepted, all work of the Contract will be completed within the time(s) specified in these Contract Documents. The undersigned also understands and agrees that, should the work not be completed within the specified time(s) or formal extension(s) thereof, the Owner may impose the herein agreed-upon liquidated damages as stipulated in the Information For Bidders and the General Provisions.

B-1.04 Bidder's Offer.

Pursuant to and in compliance with the Advertisement for bids and the Documents relating thereto, the Bidder hereby offers to furnish all plant, labor, materials, supplies, equipment and other facilities and things necessary or proper for, or incidental to the construction and completion of this Contract, as required by and in strict compliance with the applicable provisions of all Contract Documents for the following unit and/or lump sum prices.

B-1.05 BID FORM

BID
CSO 044 CONVEYANCE PROJECT

CONTRACT NO. 6 – GENERAL

Payment Item No.	Estimated Quantity	Payment Item Description Unit Price In Words	Unit Price In Figures	Extended Total In Figures
1.1	Lump Sum	Mobilization/Demobilization, for _____ _____Dollars _____Cents/L.S.* *Bidder Note: Stipulated Maximum Unit Price $375,000.00/L.S.	$	$
2.1	800 Cubic Yards	Excavation Below Subgrade, for _____ _____Dollars _____Cents/C.Y.* *Bidder Note: Stipulated Minimum Unit Price $20/C.Y.	$	$
2.2	800 Cubic Yards	Miscellaneous Excavation, for _____ _____Dollars _____Cents/C.Y.* *Bidder Note: Stipulated Minimum Unit Price $20/C.Y.	$	$
3.1	Lump Sum	Miscellaneous Work, for _____ _____Dollars _____Cents/L.S.	$	$
3.2	Lump Sum	Maintenance and Protection of Traffic, for _____ _____Dollars _____Cents/L.S.	$	$
3.3	Lump Sum	Bioretention Basin, for _____ _____Dollars _____Cents/L.S.	$	$

B-1.05 BID FORM

Payment Item No.	Estimated Quantity	Payment Item Description Unit Price In Words	Unit Price In Figures	Extended Total In Figures
3.4	Lump Sum	Maintenance of Sewer Flows, for _____ _____Dollars _____Cents/L.S.	$	$
3.5	Lump Sum	Site Security, for _____ _____Dollars _____Cents/L.S.	$	$
3.6	Lump Sum	Temporary Parking Area at 807-809 South Avenue, for _____ _____Dollars _____Cents/L.S.	$	$
3.7	Lump Sum	Clean Existing 144-inch Diameter Pipe, for _____ _____Dollars _____Cents/L.S.	$	$
3.8	Lump Sum	Modifications to Existing CSO 044, for _____ _____Dollars _____Cents/L.S.	$	$
3.9	Lump Sum	Temporary Excavation Support System, for _____ _____Dollars _____Cents/L.S.	$	$
3.10	Lump Sum	Dewatering, for _____ _____Dollars _____Cents/L.S.	$	$
3.11	Lump Sum	Connection to Existing Vacuum Flushing Chamber VFC-2, for _____ _____Dollars _____Cents/L.S.	$	$

B-1.05 BID FORM

Payment Item No.	Estimated Quantity	Payment Item Description Unit Price In Words	Unit Price In Figures	Extended Total In Figures
3.12a	Lump Sum	Conveyance Flushing Chamber – FC-A, for _____ _____Dollars _____Cents/L.S.	$	$
3.12b	Lump Sum	Conveyance Flushing Chamber – FC-B, for _____ _____Dollars _____Cents/L.S.	$	$
3.13	Lump Sum	Manhole MH-1, for _____ _____Dollars _____Cents/L.S.	$	$
3.14	Lump Sum	Relocate Existing Water Mains – C-1 and C-2 to C-3, for _____ _____Dollars _____Cents/L.S.	$	$
3.15a	Lump Sum	Modifications to Existing Facilities – VFC-1 Area, for _____ _____Dollars _____Cents/L.S.	$	$
3.15b	Lump Sum	Modifications to Existing Facilities – VFC-2 Area, for _____ _____Dollars _____Cents/L.S.	$	$
3.15c	Lump Sum	Modifications to Existing Facilities – Vent at Midland Avenue/West Castle Street, for _____ _____Dollars _____Cents/L.S.	$	$

B-1.05 BID FORM

Payment Item No.	Estimated Quantity	Payment Item Description Unit Price In Words	Unit Price In Figures	Extended Total In Figures
3.16a	Lump Sum	Plantings – West Castle Street Area, for _____ _____Dollars _____Cents/L.S.	$	$
3.16b	Lump Sum	Plantings – Onondaga Creek Area, for _____ _____Dollars _____Cents/L.S.	$	$
3.17	Lump Sum	Grouting of Existing Rip Rap, for _____ _____Dollars _____Cents/L.S.	$	$
3.18a	Lump Sum	Equipment and Electrical Service and Controls – FC-A, FC-B and South Avenue Regulator Structure, for _____ _____Dollars _____Cents/L.S	$	$
3.18b	Lump Sum	Equipment and Electrical Service and Controls – RTF SCADA Enclosure, for _____ _____Dollars _____Cents/L.S.	$	$
4.1	6,300 Square Yards	Restoration of Non-Paved Surfaces, for _____ _____Dollars _____Cents/S.Y.	$	$
4.2	800 Cubic Yards	Rock Extrication, for _____ _____Dollars _____Cents/C.Y.	$	$
4.3	850 Cubic Yards	Controlled Low Strength Material (CLSM), for _____ _____Dollars _____Cents/C.Y.	$	$

B-1.05 BID FORM

Payment Item No.	Estimated Quantity	Payment Item Description Unit Price In Words	Unit Price In Figures	Extended Total In Figures
4.4a	2,800 Cubic Yards	Select Fill Materials – Type F Run-of-Crusher Stone, for _____ _____Dollars _____Cents/C.Y.	$	$
4.4b	600 Cubic Yards	Select Fill Materials – Type R Run-of-Bank Gravel, for _____ _____Dollars _____Cents/C.Y.	$	$
4.4c	650 Cubic Yards	Select Fill Materials – NYSDOT 304.12 Type 2, for _____ _____Dollars _____Cents/C.Y.	$	$
4.4d	800 Cubic Yards	Select Fill Materials – Type 3 Crushed Stone, for _____ _____Dollars _____Cents/C.Y.	$	$
4.5	12,000 Square Feet	Temporary Excavation Support System Materials Left In Place as Ordered by Engineer, for _____ _____Dollars _____Cents/S.F.	$	$
4.6	2,550 Square Yards	Geotextile Stabilization (Woven) Fabric, for _____ _____Dollars _____Cents/S.Y.	$	$
4.7a	4 Each	Catch Basins – Roadway with Curbs, for _____ _____Dollars _____Cents/Each	$	$

B-1.05 BID FORM

Payment Item No.	Estimated Quantity	Payment Item Description Unit Price In Words	Unit Price In Figures	Extended Total In Figures
4.7b	3 Each	Catch Basins – Non-Paved Areas, for _____ _____Dollars _____Cents/Each	$	$
4.8	260 Linear Feet	PVC Sewer Pipe – 12-Inch-Diameter, for _____ _____Dollars _____Cents/L.F.	$	$
4.9	450 Linear Feet	HDPE, FRP or PCCP Sewer Pipe – 96-Inch-Diameter, for _____ _____Dollars _____Cents/L.F.	$	$
4.10	2 Each	Precast Type 2 Manholes (Depth up to 8-feet) – 48-Inch-Diameter, Storm Sewer, for _____ _____Dollars _____Cents/Each	$	$
4.11	5 Vertical Feet	Additional Depth of Precast Type 2 Manholes – 48-Inch-Diameter, for _____ _____Dollars _____Cents/V.F.	$	$
4.12a	255 Linear Feet	Bioretention Swale – Northern Swale, for _____ _____Dollars _____Cents/L.F.	$	$
4.12b	260 Linear Feet	Bioretention Swale – Southern Swale, for _____ _____Dollars _____Cents/L.F.	$	$

B-1.05 BID FORM

Payment Item No.	Estimated Quantity	Payment Item Description Unit Price In Words	Unit Price In Figures	Extended Total In Figures
4.13	1 Each	Precast Stormwater Storage Tank, for _____ _____Dollars _____Cents/Each	$	$
4.14	100 Linear Feet	Remove Existing Trolley Rail, for _____ _____Dollars _____Cents/L.F.	$	$
4.15	90 Cubic Yards	Sidewalk Restoration, for _____ _____Dollars _____Cents/C.Y.	$	$
4.16	120 Square Feet	Embedded Preformed Detectable Warning Units, for _____ _____Dollars _____Cents/S.F.	$	$
4.17	1,100 Linear Feet	Granite Curbing, for _____ _____Dollars _____Cents/L.F.	$	$
4.18	450 Cubic Yards	Concrete Foundation for Street Pavement, for _____ _____Dollars _____Cents/C.Y.	$	$
4.19a	30 Tons	Bituminous Asphalt Pavements – NYSDOT Item 403.11M Type 1 Base Course, for _____ _____Dollars _____Cents/Ton	$	$

B-1.05 BID FORM

Payment Item No.	Estimated Quantity	Payment Item Description Unit Price In Words	Unit Price In Figures	Extended Total In Figures
4.19b	175 Tons	Bituminous Asphalt Pavements – NYSDOT Item 403.13M Type 3 Binder Course, for _____ _____Dollars _____Cents/Ton	$	$
4.19c	185 Tons	Bituminous Asphalt Pavements – NYSDOT Item 403.19M Type 7F Top Course, for _____ _____Dollars _____Cents/Ton	$	$
4.20	50 Cubic Yards	Mass Concrete, for _____ _____Dollars _____Cents/C.Y.	$	$
4.21	3 Each	Replacement of City of Syracuse Survey Monuments, for _____ _____Dollars _____Cents/Each	$	$
4.22	2 Each	Replacement of Sewer Vents and Cleanouts, for _____ _____Dollars _____Cents/Each	$	$
4.23	2 Each	Water Service Replacement, for _____ _____Dollars _____Cents/Each	$	$
4.24a	40 Linear Feet	Cast Iron Soil Pipe – 4-Inch-Diameter, for _____ _____Dollars _____Cents/L.F.	$	$

B-1.05 BID FORM

Payment Item No.	Estimated Quantity	Payment Item Description Unit Price In Words	Unit Price In Figures	Extended Total In Figures
4.24b	40 Linear Feet	Cast Iron Soil Pipe – 6-Inch-Diameter, for _____ _____Dollars _____Cents/L.F.	$	$
4.25	150 Tons	Removal/Disposal of Non-Hazardous Industrial Solid Waste Generated During Earthwork, for _____ _____Dollars _____Cents/Ton	$	$
4.26	150 Tons	Removal/Disposal of Construction/ Demolition Debris Generated During Earthwork, for _____ _____Dollars _____Cents/Ton	$	$
4.27a	10 Each	Geotechnical Instrumentation – Structure Monitoring Point, Type 1, for _____ _____Dollars _____Cents/Each	$	$
4.27b	3 Each	Geotechnical Instrumentation – Structure Monitoring Point, Type 2, for _____ _____Dollars _____Cents/Each	$	$
4.27c	1 Each	Geotechnical Instrumentation – Utility Monitoring Point, for _____ _____Dollars _____Cents/Each	$	$
4.27d	8 Each	Geotechnical Instrumentation – Ground Surface Monitoring Point, Type 1, for _____ _____Dollars _____Cents/Each	$	$

B-1.05 BID FORM

Payment Item No.	Estimated Quantity	Payment Item Description Unit Price In Words	Unit Price In Figures	Extended Total In Figures
4.27e	3 Each	Geotechnical Instrumentation – Ground Surface Monitoring Point, Type 2, for _____ _____Dollars _____Cents/Each	$	$
4.27f	2 Each	Geotechnical Instrumentation – Inclinometer, for _____ _____Dollars _____Cents/Each	$	$
4.27g	2 Each	Geotechnical Instrumentation – Piezometer, for _____ _____Dollars _____Cents/Each	$	$
4.28	2 Each	Replacement of Lead and Galvanized Steel Water Services, for _____ _____Dollars _____Cents/Each	$	$
4.29	12 Linear Feet	Trench Drain, for _____ _____Dollars _____Cents/L.F.	$	$
4.30	2 Each	Connection to Existing Catch Basins, for _____ _____Dollars _____Cents/Each	$	$
4.31	45 Linear Feet	DIP Sewer Pipe – 12-Inch-Diameter, for _____ _____Dollars _____Cents/Each	$	$

B-1.05 BID FORM

Payment Item No.	Estimated Quantity	Payment Item Description Unit Price In Words	Unit Price In Figures	Extended Total In Figures
5.1	Lump Sum (Fixed Amount)	Miscellaneous Existing Utility Modifications Allowance, for Ten thousand Dollars zero Cents/L.S. (allowance)	$ 10,000.00	$ 10,000.00
5.2	Lump Sum (Fixed Amount)	Relocation of Existing Utilities by Utility Owners Allowance, for One hundred fifty thousand Dollars zero Cents/L.S. (allowance)	$ 150,000.00	$ 150,000.00
5.3	Lump Sum (Fixed Amount)	Mitigation Measures for Groundwater Dewatering, for Thirty thousand Dollars zero Cents/L.S. (allowance)	$ 30,000.00	$ 30,000.00
5.4	Lump Sum (Fixed Amount)	Steel Price Adjustment, for Fifty thousand Dollars zero Cents/L.S. (allowance)	$ 50,000.00	$ 50,000.00
5.5	Lump Sum (Fixed Amount)	Fuel Price Adjustment, for Fifty thousand Dollars zero Cents/L.S. (allowance)	$ 50,000.00	$ 50,000.00
5.6	Lump Sum (Fixed Amount)	Asphalt Price Adjustment, for Ten thousand Dollars zero Cents/L.S. (allowance)	$ 10,000.00	$ 10,000.00
5.7	Lump Sum (Fixed Amount)	Additional Site Restoration, for One hundred thousand Dollars zero Cents/L.S. (allowance)	$ 100,000.00	$ 100,000.00

B-1.05 BID FORM

Payment Item No.	Estimated Quantity	Payment Item Description Unit Price In Words	Unit Price In Figures	Extended Total In Figures
TOTAL BASE BID CONTRACT NO. 6 - GENERAL			TOTAL PRICE $ _____ (Price in Figures)	

BID

B-1.06 Bid Acceptance.

If written notice of acceptance of this Bid in the form of a Letter of Intent to award the Contract is mailed, faxed or delivered to the undersigned within forty-five (45) days after the date of opening of the Bids, the undersigned will accept award of the Contract, provide the required insurance and bond documents and sign the Agreement contained in the Contract Documents.

The undersigned hereby declares that he has received and reviewed Addenda Numbered (if any) _____ and has considered this (these) Addenda in preparation of his bid.

The undersigned hereby designates as his office to which such notice of acceptance may be mailed, telegraphed or delivered:

NAME AND ADDRESS OF CONTACT PERSON:

_____

_____ **PHONE:**_____ **FAX:**_____

B-1.07 Bidder's Acknowledgement of Labor Law Requirements.

The undersigned agrees to comply with the requirements as to the conditions of employment, wage rates and hours of labor set forth in the Contract Documents and the New York State Department of Labor. The undersigned bidder hereby states that in the 5 years immediately preceding the submission of this bid, the bidder

HAS **HAS NOT** **(Cross Out One)**

been found in willful violation of the New York State Labor Law for failure to pay prevailing wages and supplements, as those terms are defined in the New York State Labor Law.

B-1.08 Bid Withdrawal.

The Bid may be withdrawn at any time prior to the scheduled time for the opening of bids or any authorized postponement thereof.

B-1.09 Bid Security.

Accompanying this proposal is a certified check, checks or bid bond for the sum of _____ _____ ($) Dollars, which shall become the property of the Owner, if, in case this proposal shall be accepted by the Owner, the undersigned shall fail to execute a Contract with and give the required bonds and insurance to the Owner within fourteen (14) days after the date of said mailing, faxing or delivering of said notice of acceptance. If the undersigned fails or refuses to provide an approvable M/WBE Utilization Plan, such bidder shall forfeit to the Owner, as liquidated damages for such failure or refusal, the security deposited with the bid.

BID

B-1.10 Bid Signature Block.

Name of Bidder:* _____

Address of Bidder: _____

Telephone Number: _____

Facsimile Number: _____

Federal Identification Number: _____

Signature, Printed Name & Title of Person Signing on Behalf of Bidder:

_____

Date of Signature: _____

*Insert bidder's name; if a corporation, give the exact official corporate name and affix the Corporate seal; if a partnership or an individual doing business under an assumed name, give the exact official name as it appears on the Assumed Name Certificate.

BID

RESOLUTION

(Corporate Bidders Only)

Resolved that_____

be authorized to sign and submit the bid or proposal of this corporation for the

following project_____

_____

(Describe Project)

and to include in such bid or proposal the certificate as to non-collusion

required by Section one hundred three-d of the General Municipal Law as the act

and deed of such corporation, and for any inaccuracies or misstatements in such

certificate this corporate bidder shall be liable under the penalties of perjury.

_____

The foregoing is a true and correct copy of the resolution adopted by

_____

corporation at a meeting of its board of directors held on the

_____day of _____, 20_____.

(SEAL OF THE CORPORATION)

_____

Secretary

BID

ATTACH

BID SECURITY

TO THIS SHEET

BID

STATEMENT OF SURETY'S INTENT

To: _____

We have reviewed the Bid of _____
(Contractor)

of _____
(Address)

for _____

_____
(Project)

Bids for which will be received on _____
(Bid Opening Date)

and wish to advise that should this Bid of the Contractor be accepted and the Contract awarded to him, it is our present intention to become surety on the performance bond and labor and material bond required by the Contract.

Any arrangement for the bonds required by the Contract is a matter between the Contractor and ourselves and we assume no liability to you or third parties if for any reason we do not execute the requisite bonds.

We are duly authorized to do business in the State of New York.

Attest:

_____ _____

_____
Surety's Authorized Signature(s)

Attach Power of Attorney

Corporate seal if any. If
no seal, write "No Seal:
across this place and sign.)

(This Form Must Be Completed Prior
To the Submission of the Bid)

BID

CERTIFICATION OF NONSEGREGATED FACILITIES

(Applicable to contracts, subcontracts, and agreements with Applicants who are themselves performing federally assisted construction contracts, exceeding $10,000 which are not exempt from the provisions of the Equal Opportunity clause).

By submission of this bid, the bidder, offeror, applicant, or subcontractor certifies that he does not maintain or provide for his employees any segregated facilities at any of his establishments, and that he does not permit his employees to perform their services at any location, under his control, where segregated facilities are maintained. He certifies further that he will not maintain or provide for his employees any segregated facilities at any of his establishments, and that he will not permit his employees to perform their services at any location, under his control, where segregated facilities are maintained. Provided that separate or single user restrooms and necessary dressing or sleeping areas shall be provided to assure privacy between the sexes. The bidder, offeror, applicant, or subcontractor agrees that a breach of this certification is a violation of the Equal Opportunity clause in this contract. As used in this certificate, the term "segregated facilities" means any waiting rooms, work areas, rest rooms and wash rooms, restaurants and other eating areas, time clocks, locker rooms and other storage or dressing areas, parking lots, drinking fountains, recreation and entertainment areas, transportation, and housing facilities provided for employees which are segregated by explicit directive or are in fact segregated on the basis of race, creed, color, or national origin, because of habit, local custom, or otherwise. He further agrees that (except where he has obtained identical certifications from proposed subcontractors for specific time periods) he will obtain identical certifications from proposed subcontractors prior to the award of subcontracts exceeding $10,000 which are not exempt from the provisions of the Equal Opportunity clause; that he will retain such certifications in his files, and that he will forward the following notice to such proposed subcontractors (except where the proposed subcontractors have submitted identical certifications for specific time periods).

_____

(Signature) (Date)

_____

(Name and Title of Signer-Please Type)

BID

BUY AMERICAN REQUIREMENTS

The undersigned bidder hereby certifies to the Owner that it understands the goods and services under this Agreement are being made available for a project being funded with monies made available by the federal American Reinvestment and Recovery Act of 2009 (ARRA) and such law contains provisions commonly known as "Buy American;" that requires all of the iron, steel, and manufactured goods used in the project be produced in the United States (Buy American Requirements") including iron, steel, and manufactured goods provided by the Contractor.

1. Identification of American–made Iron, Steel, and Manufactured Goods: Consistent with the terms of the Owner's bid solicitation and the provisions of ARRA Section 1605, the bidder certifies that this bid reflects the Bidder's best, good faith effort to identify domestic sources of iron, steel, and manufactured goods for every components are available on the schedule and consistent with the deadlines prescribed in or required by the bid solicitation.

2. Verification of U.S. Production: The Bidder certifies that all components contained in the bid solicitation that are American-made have been so identified, and if this bid is accepted, the Bidder agrees that it will provide reasonable, sufficient, and timely verification to the Owner of the U.S. production of each component so identified.

3. Documentation Regarding Non- American-made Iron, Steel, or Manufactured Goods: The Bidder certifies that for any component or components that are not American-made and are so identified in this bid (on the form following this page), the Bidder has included in or attached to this bid one or both of the following, as applicable:

    a. Identification of and citation to a categorical waiver published by the U.S. Environmental Protection Agency in the Federal Register that is applicable to such component or components;

    b. Verifiable documentation sufficient to the Owner, as required in the bid solicitation or otherwise, that the Bidder has sought to secure American-made components but has determined that such components are not available on the schedule and consistent with the deadlines prescribed in the bid solicitation, with assurance adequate for the Bidder under the applicable conditions stated in the bid solicitation or otherwise.

4. Information and Detailed Justification Regarding Non-American-made Iron, Steel, or Manufactured Goods: The Bidder certifies that for any such component or components that are not so available, the Bidder certifies that for any such component or components that are not available, the Bidder has also provided in or attached to this bid information, including but not limited to the verifiable documentation and a full description of the bidder's efforts to secure any such American-made component or components, that the Bidder believes are sufficient to provide and as far as possible constitute the detailed justification required for a waiver under section 1605 with respect to such component or components. The Bidder further agrees that, if this bid is accepted, it will assist the Owner in amending, supplementing, or further supporting such information as required by the Owner to request and, as applicable, implement the terms of a waiver with respect to any such component or components.

Signature, Printed Name & Title of Person Signing on Behalf of Bidder:

_____

Date of Signature: _____

BID

Project Components (Iron, Steel, and Manufactured Goods) for Which Bidder Certifies that American-Made Component is not Available and a Request for Waiver is Hereby Made

Project Component	Specification Section	Categorical Waiver (if applicable)	Basis on which Waiver would be Requested
		Deminimis Incidentail Components Other _____ (name)	
		Deminimis Incidentail Components Other _____ (name)	
		Deminimis Incidentail Components Other _____ (name)	
		Deminimis Incidentail Components Other _____ (name)	
		Deminimis Incidentail Components Other _____ (name)	
		Deminimis Incidentail Components Other _____ (name)	
		Deminimis Incidentail Components Other _____ (name)	
		Deminimis Incidentail Components Other _____ (name)	
		Deminimis Incidentail Components Other _____ (name)	

Attach additional sheets as necessary.

Attach verifiable documentation and a full description of the bidder's efforts to secure any such American-made component or components, that the Bidder believes are sufficient to provide and as far as possible constitute the detailed justification required for a waiver under ARRA Section 1605 with respect to such component or components.

BID

CONCEPTUAL M/WBE WORK PLAN
CSO 044 CONVEYANCE PROJECT

CONTRACT NO. 6 – GENERAL

Contract Name and Number	Scope of Work to be Subcontracted to M/WBE Firms	Estimated Value of Work
	Total	**$** _____

BID

CONCEPTUAL M/WBE WORK PLAN

SAMPLE BREAKDOWN

Contract Name and Number	Scope of Work to be Subcontracted to M/WBE Firms	Estimated Value of Work
General Construction	Sitework – Landscaping and Restoration of Vegetated Surfaces	$ XX,XXX
(Contract No.4)	Masonry – Installation of Block Walls	$ XX,XXX
	Metals – Fabrication and Installation of Influent Pump Station Bar Screen	$ XX,XXX
	Site Work – Concrete Sidewalk Installation	$ XX,XXX
	Site Work – Pavement Restoration	$ XX,XXX
	Total	**$ X,XXX,XXX**

SAMPLE

BID

OMB Control No: _____
Approved: _____
Approval Expires: _____

Environmental
Protection Agency

Disadvantaged Business Enterprise Program
DBE Subcontractor Utilization Form

BID/PROPOSAL NO.	PROJECT NAME
NAME OF PRIME BIDDER/PROPOSER	E-MAIL ADDRESS
ADDRESS	
TELEPHONE NO.	FAX NO.

The following subcontractors[1] will be used on this project:

COMPANY NAME, ADDRESS, PHONE NUMBER, AND E-MAIL ADDRESS	TYPE OF WORK TO BE PERFORMED	ESTIMATED DOLLAR AMOUNT	CURRENTLY CERTIFIED AS AN MBE OR WBE?

I certify under penalty of perjury that the forgoing statements are true and correct. In the event of a replacement of a subcontractor, I will adhere to the replacement requirements set forth in 40 CFR Part 33 Section 33.302(c).

_____ _____
Signature Of Prime Contractor Date

_____ _____
Print Name Title

[1]Subcontractor is defined as a company, firm, joint venture, or individual who enters into an agreement with a contractor to provide services pursuant to an EPA award of financial assistance.

EPA FORM 6100-4 (DBE Subcontractor Utilization Form)

Add additional pages if/as necessary

BID

OMB Control No: _____
Approved: _____
Approval Expires: _____

Environmental Protection Agency

Disadvantaged Business Enterprise Program
DBE Subcontractor Performance Form

NAME OF SUBCONTRACTOR[1]	PROJECT NAME
ADDRESS	BID/PROPOSAL NO.
TELEPHONE NO.	E-MAIL ADDRESS
PRIME CONTRACTOR NAME	

CONTRACT ITEM NO.	ITEM OF WORK OR DESCRIPTION OF SERVICES BID TO PRIME	PRICE OF WORK SUBMITTED TO PRIME CONTRACTOR

Currently certified as an MBE or WBE under EPA's DBE Program? _____ Yes _____ No

_____ Signature of Prime Contractor	_____ Date
_____ Print Name	_____ Title
_____ Signature of Subcontractor	_____ Date
_____ Print Name	_____ Title

[1]Subcontractor is defined as a company, firm, joint venture, or individual who enters into an agreement with a contractor to provide services pursuant to an EPA award of financial assistance.

EPA FORM 6100-3 (DBE Subcontractor Performance Form)

Add additional pages for each company listed in Form 6100-4 if/as necessary

AGREEMENT

THIS CONTRACT, in five (5) copies, made and entered into this _____ day of _____, 20___, by and between the County of Onondaga, by Joanne M. Mahoney, County Executive of said County, ("Owner"), and_____

_____of_____

County of _____ State of_____
hereinafter designated as the CONTRACTOR, party of the second part.

WHEREAS, the Owner desires to construct the Project as defined in the Contract Documents and the Contractor agrees to perform the Work to construct the Project; and

Article 1. DESCRIPTION. Pursuant to the definitions of terms, descriptions, terms and conditions set forth in the Contract Documents as herein defined, the Contractor shall construct CSO 044 Conveyance – Contract No. 6 – General.

Article 2. PERFORMANCE. In consideration of the payments to be made as set forth in the Bid and Contract Documents, the Contractor, at its own sole cost and expense, shall perform all of the labor and services, and furnish all the labor and materials, plant and equipment necessary to complete, and shall complete in good, substantial, workmanlike and approved manner, the Project, within the time specified and in accordance with the terms, instructions, orders and direction of the Owner made in accordance with the Contract Documents.

Article 3. COMPENSATION. The Owner shall pay and the Contractor shall accept as full compensation for all Work done and materials furnished, and also for all costs and expenses incurred, and loss or damages sustained by reasons of the action of the elements or growing out of the nature of the Work, or from any unforeseen obstructions or difficulty encountered in the prosecution of the Work, and for all risks of every description connected with the Work, and for all expenses incurred by, or in consequence of, the suspension or discontinuance of the Work as herein specified, and for faithfully completing the Work, and the whole thereof, as herein provided, and for maintaining the Work in good condition until the final payment is made, at the prices set forth in the Bid and Contract Documents attached hereto.

Article 4. CONTRACT DOCUMENTS. The Contract Documents are defined in the Definition of Terms and are incorporated by reference herein.

Article 5. FAILURE TO COMPLY. If the Contractor shall fail to strictly comply with any of the terms, conditions, and provisions of this Agreement and the Contract Documents, then the Owner may make use of any or all remedies provided for in the Contract Documents and shall have the right and power to proceed in accordance with the provisions thereof.

Article 6. GOVERNING LAW. This Agreement shall be governed and interpreted pursuant to the laws of the State of New York without regard to principles of conflicts of law.

Article 7. VENUE. All claims, counterclaims, disputes and other matters in question between the Owner and Contractor arising out of or relating to this Agreement or the breach thereof will be commenced in the New York State Supreme Court located in Onondaga County or the United States District Court located in the Northern District of the State of New York.

Article 8. APPROPRIATIONS. It is understood by and between the parties hereto that this Agreement shall be deemed executory only to the extent of the monies appropriated and available for the purpose of this Agreement by the County, State or Federal government, including but not limited to monies appropriated and made available from the Appropriations Act Grant from the U. S. Environmental Protection Agency, and the New York State Water Pollution Control Revolving Fund, and by appropriation of the Onondaga County Legislature and no liability on account thereof shall be incurred by the Owner beyond monies appropriated and available for the purpose thereof.

Article 9. SUSPENSION AND DEBARMENT.

The signatory to this Agreement, certifies that EXCEPT AS NOTED BY THE CONTRACTOR, its company and any person associated therewith in the capacity of owner, partner, director, officer, or major stockholder:

a) is not currently under suspension, debarment, voluntary exclusion, or determination of ineligibility by any federal agency; and

b) has not been suspended, debarred, voluntarily excluded or determined ineligible by any federal agency within the past three years.

Article 10. SEVERABILITY. If any term or provision of this Agreement shall be held invalid or unenforceable, the remainder of the Agreement shall not be affected thereby and every other term and provision of this Agreement shall be valid and enforced to the fullest extent permitted by law.

Article 11. INSURANCE AND BONDS AND HOLD HARMLESS, DEFENSE AND INDEMNIFICATION.

11.01. Contractor's Insurance.

A. The Contractor at his expense shall procure and maintain the insurance required in this section and elsewhere in the Contract Documents to be provided by the Contractor. The Contractor also shall require each subcontractor to procure and maintain the insurance required by the Contract Documents.

The County of Onondaga will not execute the Agreement nor permit work under the Agreement and Contract Documents to commence or proceed until the successful Bidder has delivered to the County of Onondaga five (5) copies of the Certificate of Insurance form contained herein, fully completed, signed and dated by an authorized representative of the insurance company or companies providing the insurance. In addition the successful Bidder shall deliver one (1) certified copy of the endorsements to the Comprehensive General Liability, Automobile Liability and Umbrella policies showing that the County of Onondaga, the City of Syracuse, the Engineer, Construction Project Manager and any other parties named in the Special Projeet Conditions have been named as additional insureds on a primary and non-contributing basis and the required coverages have been provided. See supplemental "additional insured" requirements in the Special Project Conditions of these Contract Documents. Only the Certificate of Insurance form specifically contained herein will be accepted as meeting the requirements of this section. (Sufficient copies of this form will be furnished by the County of Onondaga to the successful bidder.) Notwithstanding issuance of a Letter of Intent to award the Contract, failure by the successful Bidder to furnish the insurance documentation required herein, in form and content acceptable to the Onondaga County Attorney, within forty-five (45) days of the receipt of Bids will be grounds for rejection of the

Bid and forfeiture of the bid deposit, unless such time is extended by the County, at its sole discretion. The receipt by the County of the insurance documents offered by the successful Bidder, and execution of the Agreement on the basis of the documents offered, shall not relieve the Contractor of the responsibility for furnishing and maintaining throughout the course of the Agreement and the guarantee period all the kinds and amounts of coverages specified herein.

Before being permitted to commence work under this Agreement, each subcontractor shall deliver to the County of Onondaga one (1) certificate of insurance and one (1) certified copy of the endorsements, satisfactory in form to the County of Onondaga, showing that the subcontractor has insurance in force in the kinds and amounts required herein to be provided by the subcontractors. The Contractor shall be wholly responsible for the adequacy of the insurance furnished by its subcontractors.

The Contractor and each subcontractor shall from time to time upon the demand of the County of Onondaga promptly deliver to the County of Onondaga such proof of insurance as the County may require, including certified copies of the complete, original policies for each of the kinds of insurance required to be procured by the Contractor and/or subcontractors, if requested.

Each policy of insurance required under the Agreement shall be issued by an A-Rated - Class X (according to Bests' General Ratings) insurance company authorized by the State of New York to issue such policy in this State, shall be in form and content satisfactory to the County of Onondaga and shall provide that the coverages afforded under the policies will not expire and/or nonrenew, be reduced or restricted in coverage, or canceled for any reason until at least thirty (30) days' prior written notice has been given by Certified Mail to Onondaga County Department of Water Environment Protection by the issuing insurance company. In the event the Contractor's or any subcontractor's insurance coverages expire or are changed or canceled during the course of the work of this Agreement , the County of Onondaga may elect to bar the Contractor or subcontractor from the site of work until such time as the Contractor or subcontractor has demonstrated compliance with these insurance requirements and reinstatement of the required coverages.

Should the Contractor fail to demonstrate compliance with these insurance requirements within thirty (30) days after the effective date of any expiration, noncomplying change or cancellation, the County of Onondaga may elect to terminate the Agreement in accordance with the termination and default provisions of the Contract Documents.

All liability insurance required by this Agreement shall be maintained in force during the term of this Agreement, and until the later of one year after the date of final acceptance or one year after the Contractor or any subcontractor performs any work under the Contract Documents at the owner's option.

Failure of the Contractor to procure or maintain any of the insurance coverages required herein shall not relieve the Contractor from any liability under the Contract Documents, nor shall the insurance requirements be construed to conflict with or otherwise limit the obligations or indemnification responsibilities of the Contractor as may be stated elsewhere in the Contract Documents.

B. The kinds of insurance required to be procured and maintained by the Contractor (in addition to any coverage required by other sections of this Agreement and Contract Documents) shall be as follows:

1. Comprehensive General Liability Insurance containing the following kinds of coverage and naming the Contractor as the insured; and the County of Onondaga and other parties as identified in Section 11.01A and in the Special Project Conditions, as additional insureds on a primary and non-contributing basis.

   A) Premises Operations Insurance providing coverage for legal liability and expenses for bodily injury and property damage arising out of or resulting from the operations in connection with this Contract.

   B) Independent Contractors Liability Insurance providing coverage for legal liability and expenses for bodily injury and property damage arising out of or resulting from the operations or conduct of subcontractors employed by the Contractor in connection with this Contract.

   C) Completed Operations and Products Liability Insurance providing coverage for legal liability for bodily injury and property damage arising out of or occurring during the time between the date of the certificate of completion of the work and the date of the expiration of the guarantee period, or occurring after the work has been abandoned; or arising out of the products, materials, or equipment furnished by the Contractor under this Contract after physical possession of the products, materials or equipment has been relinquished.

   D) Blanket Broad Form Contractual Liability Insurance providing coverage for legal liability and expenses for bodily injury and property damage imposed by contract upon the Contractor with respect to all operations under this Contract by the Contractor or by his subcontractors. The policy shall not contain an exclusion for actions on a contract by a third party beneficiary arising out of a project for a public authority. (The Contractor is advised to refer to the Hold Harmless, Defense and Indemnification provisions of this Contract, which appear following the end of this section.)

2. A) Owner's Protective Liability Insurance providing coverage for the County of Onondaga, and the City of Syracuse and any other parties named in the Special Project Conditions as the named insureds, for legal liability and expenses for bodily injury and property damage arising out of the operations under this Contract performed for the County of Onondaga by the Contractor or any of his subcontractors, or out of acts or omissions of the County of Onondaga in connection with the County of Onondaga's general supervision of such operations.

   B) Owner's Contractual Liability Insurance providing coverage for the County of Onondaga, and the City of Syracuse and any other parties named in the Special Project Conditions as the named insureds for legal liability and expenses for bodily injury and property damage assumed by the County of Onondaga by Contract or Easement or Right-of-Way Agreement for work

performed on private land in connection with this Contract. The policy shall not contain an exclusion for actions on a contract by a third party beneficiary arising out of a project for a public authority. (This coverage shall be provided separately and independently from the Contractor's Contractual Liability Insurance.)

Separate Owner's Protective and Contractual Policies shall be issued for each separate Contract being performed for the County of Onondaga. Endorsements to existing policies will not be accepted.

3. Comprehensive Automobile Liability Insurance, naming the Contractor as the named insured; and the County of Onondaga and other parties as identified in the Special Project Conditions, as additional insureds on a primary and non-contributory basis. The policy shall provide coverage for legal liability and expenses for bodily injury and property damage arising out of the ownership, maintenance, operation, use, loading or unloading of owned, nonowned, and hired automobiles. The policy shall include the MCS-90 Sudden and Accidental Pollution endorsement.

4. Worker's Compensation, Employer's Liability and Disability Insurance as required by the laws of the State of New York.

The Contractor further agrees to comply with the requirements of the New York State Workers' Compensation Board regarding proof of compliance with the New York State Workers' Compensation Law. The New York State Workers' Compensation Board requires the County to obtain from Contractors proof of Workers' Compensation insurance coverage, self-insurance or exemption from the requirement of obtaining Workers' Compensation insurance coverage. Proof must be submitted to the County on forms specified by the Workers' Compensation Board and that are stamped as received by the Workers' Compensation Board (see Appendix B for sample forms, actual forms should be obtained from the applicable insurance company).

All Bodily Injury Liability Insurance, except automobile, shall specifically include Personal Injury Liability coverage for damages which are sustained by any person as a result of an offense directly or indirectly related to the employment of such person by the Contractor, or by any other person.

All Property Damage Liability Insurance, except automobile, shall specifically include coverage for explosion, collapse and underground operations (XCU hazards) and Broad Form Property Damage.

It is understood by the parties that it is the intent of this contract to make the Contractor's insurance policies on which the County of Onondaga is an additional insured on a primary and non-contributing basis with regard to any claim arising under this contract.

A cross liability endorsement or a Separation of Insured Clause, as per the Standard ISO General Liability form shall be incorporated in the General Liability Policy and Automobile Liability Policy.

The insurance provided by the Contractor, or any applicable subcontractor, shall provide coverage for all operations which are necessary or incidental to the performance of the contract or applicable subcontract. If the work of this contract involves asbestos abatement or other hazardous waste or pollution abatement operations, the Certificate of Insurance provided by the Contractor, or applicable subcontractor, shall specifically state that coverage for that operation is included.

If applicable to the work of this Contract, any exclusions referring to operations within any specified distance of railroad property and/or facilities shall be deleted.

C. Unless otherwise specifically required, the limits of all liability insurance to be procured by the Contractor shall not be less than the following:

1. For the Contractor's Comprehensive General Liability and Automobile Liability:

CGL: A combined single limit of at least $1,000,000 per Occurrence/$1,000,000 Aggregate in the primary policy.

AUTO: A combined single limit of at least $1,000,000 per Occurrence in the primary policy.

PLUS

An Umbrella in the amount of at least $10,000,000 that follows the coverage forms of the underlying liability policies or is broader.

The County of Onondaga and other parties as identified in Section 11.01A and the Special Project Conditions, shall be added to the Umbrella as additional insureds on a primary and non-contributing basis (as respects this project) and a certified copy of the Umbrella Policy (complete with certified endorsements adding the additional insureds and providing 30 days' notice to the County of change, cancellation or non-renewal) must be submitted along with the other insurance documents required herein.

2. For the Owner's Protective Liability and the Owner's Contractual Liability:

A combined single limit of $2,000,000 per Occurrence in the primary policy.

(An Umbrella will not be acceptable for providing the specified limits for The Owner's Protective and Owner's Contractual Liability)

D. Subcontractors' Insurance

The kinds of insurance and amounts required to be procured and maintained by subcontractors (in addition to any coverage required by other sections of this Contract) shall be as follows:

1. Comprehensive General Liability Insurance providing coverage for the subcontractor, as the named insured and the County of Onondaga and other parties identified in Section 11.01A and in the Special Project Conditions, as additional insureds on a primary and non-contributing basis in the form herein above required of the Contractor. (Owner's Protcetive and Owner's Contractual Liability Insurance is not required of subcontractors.)

2. Comprehensive Automobile Liability Insurance providing coverage for the subcontractor, as the named insured, and the County of Onondaga and other parties identified in Section 11.01A and Special Projcet Conditions, as the additional insureds on a primary and non-contributing basis as herein above required of the Contractor.

3. Worker's Compensation, Employer's Liability and Disability Insurance as required by the laws of the State of New York.

4. Unless otherwise specifically required, the limits of liability insurance to be procured by subcontractors shall not be less than the amounts required herein above to be furnished by the Prime Contractor.

5. If the work of the subcontract involves asbestos abatement or other hazardous waste or pollution abatement operations, the Certificate of Insurance provided by the subcontractor involved in such operations shall specifically state that coverage for that operation is included.

E. Alternative or Additional Insurance

If required by the County of Onondaga, the Contractor and any subcontractor shall provide any other alternative or additional insurance coverage, with appropriate additions or deductions from the Contract price to be made pursuant to the provisions applicable to change orders.

F. Liability Insurance Contracts

All liability insurance contracts provided herein that have an annual aggregate limit of liability, shall provide that the annual aggregate limit applies on a per project basis.

11.02. Construction (Property) Insurance.

A. Unless otherwise provided in the Special Project Conditions, the County of Onondaga agrees to include the interest of the Contractor(s), subcontractors, and sub-subcontractors in an insurance policy covering all loss to the work, material, and equipment by perils covered under the all risk Property form, including malicious mischief and vandalism. The policy will be written by an insurance company licensed to issue such policies in the State of New York. Each of the Prime Contractors on this project will be named insureds on this policy with the County of Onondaga. Each Prime Contractor will be furnished a copy of the certificate of insurance after the Contract is executed. The County of Onondaga will purchase, pay for and maintain this insurance throughout the life of this Contract and, therefore, the cost of Construction Insurance shall not be included in the Contractor's bid.

B. The amount of the insurance provided hereunder shall be at all times at least equal to the full value of the work, material and equipment complete and in place and the value of material and equipment delivered to the site or approved off-site storage locations.

C. The insurance to be furnished by the County of Onondaga will cover only material and equipment which will become a permanent part of the completed project and scaffolding, construction forms and temporary structures, if their values are chargeable to the project.

D The insurance to be provided hereunder shall include coverage for materials and equipment accepted for incorporation into the completed project and stored on the site of the work, stored in an off-site location which has been approved by the County of Onondaga or in transit between approved off-site storage locations and the project site.

E. The insurance to be furnished by the County of Onondaga will include a deductible of $2,500 on all perils of loss. The deductible shall be paid by the Contractor, or Contractors in proportion to their respective portions of loss if the loss affects more than one Prime Contractor.

F. Following any loss which the Contractor believes may be covered by the insurance to be provided hereunder, the Contractor shall immediately notify the County of Onondaga. The County will report losses on behalf of the Contractor. The Contractor shall cooperate with the County and the insurer, or its authorized representatives, in their efforts to investigate and settle the claim, including providing any and all requested information, documentation and reports and providing safe access to the site for inspection. Contractors' failure to provide timely notification of loss to the County, or Contractors' failure to provide requested and adequate information or documentation, shall not prejudice the County in any manner whatsoever and shall, at the County's sole discretion, relieve the County from any obligation therefore.

The Contractor is responsible for notifying law enforcement or other applicable authorities in the event of a loss and for compiling all pertinent and required information in a timely manner.

Following a loss, the Contractor shall immediately take all necessary and reasonable steps to protect the property from further damage or loss.

All costs incurred by the Contractor associated with the loss not covered by the loss settlement shall be borne by the Contractor.

G. Any loss insured under the policy to be provided hereunder shall be adjusted with the County of Onondaga and made payable to the County of Onondaga as trustee for the insureds, as their interests may appear. The proceeds of any insured loss shall be credited to the capital project account out of which the Contract is funded and shall be distributed in accordance with such agreement as the parties in interest may reach. Actual disbursement of insurance proceeds in the agreed upon amounts shall be made by the County of Onondaga to the Contractor(s) in accordance with the prevailing standard procedures of the Onondaga County Comptroller.

H. The County of Onondaga reserves the right to choose and determine the manner by which any damaged work covered by the insurance provided hereunder shall be replaced or repaired and the extent to which replacement or repair shall be accomplished. In the event the County of

Onondaga chooses not to replace or repair damaged work, or chooses to have repairs or replacement accomplished by others, the Contractor(s) shall be paid in full by the County of Onondaga for the actual value of all work accomplished on the affected portion of the damaged facility prior to the time of the loss. The Contractor(s) shall not have any claim or be entitled to any payment, including loss of profit, for the value of lost or uncompleted work. Nor shall this provision in any way release the Contractor or the Contractor's surety from obligations under the Contract to fully complete the undamaged portions of the project. In the event the County of Onondaga chooses to have the repair or replacement of the damaged work performed under this Contract, said work shall be paid for and accomplished in accordance with the Change Order provisions of this contract.

I. The County of Onondaga and the Prime Contractor(s) waive all rights against each other and the subcontractors, sub-subcontractors, officers, agents and employees of each other for damages caused by insured against perils to the extent covered by the insurance provided hereunder, except such rights as they may have to the proceeds of such insurance held by the County of Onondaga as trustee.

J. If the County of Onondaga chooses to occupy or use a portion or portions of the work prior to substantial completion thereof, such occupancy shall not commence prior to a time mutually agreed to by the County of Onondaga and Contractor(s) and to which the insurance company or companies providing the property insurance have consented by endorsement to the policy or policies. The insurance provided hereunder shall not be cancelled or lapsed on account of such partial occupancy. Consent of the Contractor(s) and of the insurance company or companies to such occupancy or use shall not be unreasonably withheld.

K. The County of Onondaga makes no guarantee, expressed or implied, in providing the hereunder described Property Insurance, that said insurance will cover any and all losses to the complete satisfaction of the Contractor(s), nor shall the County of Onondaga be under any obligation whatsoever to make good any loss or portion of loss not covered by said insurance.

The County of Onondaga assumes no liability, and the Contractor shall have no claim against the County of Onondaga, for the amount of a loss claimed by the Contractor which exceeds the actual proceeds received from the insurance provided hereunder. The Contractor shall have no claim against the County of Onondaga for any loss caused by perils not covered by the insurance provided by the County of Onondaga hereunder, nor shall the Contractor have any claim against the County of Onondaga for any loss to material, equipment or personal property not covered by the said insurance.

11.03. Certificates Of Insurance.

The Contractor shall have furnished to the Onondaga County Department of Law the attached Certificate of Insurance to be filled out and signed by the insurance agent, which shall evidence all of the above requirements of insurance, including Workers' Compensation and Employers' Liability Insurance. Said Certificate contains specific language so as to adequately advise the County of the Contractor's compliance with the aforesaid requirements of insurance including but not limited to specifically detailing the types, amount and duration of the insurance coverages and verifying that the issuing company(s) endorsed such policies as hereinabove required so as to include the County of Onondaga and other parties identified in Article 11.01A and in the Special Project Conditions, as additional insureds on a primary and non-contributing basis and to notify the County of any change diminishing coverage, limits, cancellation or non-renewal of the insurance policies. Upon any and all renewals of the subject insurances during the duration of this contract, a new Certificate of Insurance shall immediately be sent to the Certificate of Insurance Holder, the Onondaga

County Attorney. THE ATTACHED CERTIFICATE OF INSURANCE IS THE ONLY ONE ACCEPTABLE TO THE COUNTY OF ONONDAGA.

11.04 Performance and Payment Bonds.

A. The Contractor, at his sole cost and expense, shall furnish a Performance Bond as security for faithful performance of this Contract, and a separate Labor and Material Payment Bond for the payment of all persons performing labor or furnishing materials in connection with this Contract. Each bond is to be furnished in five (5) copies.

B. Unless otherwise required in the Special Project Conditions, each bond shall be in an amount at least equal to one hundred (100) percent of the accepted bid.

C. The form of the bonds and the surety company(s) on each bond shall be acceptable to the County of Onondaga. The surety company(s) on each bond shall be authorized to conduct business in the State of New York.

D. Unless otherwise required in the Special Project Conditions, each bond shall remain in force during the guarantee period provided in this Contract.

E. The County of Onondaga reserves the right to make any additions to, omissions from, or changes in the work or material called for in the Contract Documents, without notice to the surety(s) on the bonds.

F. The Performance Bond and Labor and Material Payment Bond shall each identify this Contract by Project Name, Contract Number and/or Name and Date of Contract. The Date of Contract shall be the date that the agreement is executed by the Onondaga County Executive. The Contractor will be advised of the Date of Contract after the Contract is executed and the date is known, and shall thereupon promptly submit the required bond. The Notice to Proceed with the work of the Contract will not be issued to the Contractor until the required bonds have been reviewed and approved by the Onondaga County Attorney.

G. The bonds shall clearly identify the name, address and telephone number of the Surety's office and the name of the individual to whom correspondence concerning the Contract may be sent. The County reserves the right to correspond with the Contractor's surety in the event that non-performance or non-payment on the part of the Contractor appears, in the sole judgment of the County, to be jeopardizing successful or timely completion of the Contract. However, the County shall have no obligation to initiate or maintain such correspondence or to otherwise notify or apprise the Contractor's surety of the progress or status of the Contract, and failure by the County to make such notifications shall not relieve the Contractor or the Contractor's surety from any obligation it may otherwise have.

11.05. Other Bonds.

In addition to the Performance and Payment Bonds required herein above, the Contractor shall provide at his expense such other specific bonds or special guarantees as may be called for in other sections of the Contract Documents. Examples of special bonds which may be required include, but are not limited to, roof bonds, maintenance bonds and bonds posted in lieu of required experience.

11.06.Additional Security.

If at any time the County of Onondaga shall be or become dissatisfied with any surety or sureties then upon the surety bonds, or if for any other reason such bonds shall cease to be adequate security to the County of Onondaga, the Contractor shall within five (5) days after notice from the County to do so, substitute another bond or bonds and surety(s), both of which shall be acceptable to the County. No payments on current estimates shall be deemed due nor shall be made until the new sureties shall have qualified and been accepted by the County of Onondaga.

11.07. Hold Harmless, Defense and Indemnification.

Contractor covenants and agrees to indemnify, defend and hold harmless:

1) the Owner from any and all fines and penalties imposed under the Consent Judgment upon Owner as a result of its failure to meet any milestone dates on account of delay for which Contractor is in whole or in part responsible;

2) the Owner from any loss of funding relating to the Project including but not limited to loss of funding from agencies identified in the Special Project Conditions, as a result of Contractor's failure to complete the Work in accordance with the Contract Documents including the Owner approved contract schedule or to deliver to Owner the documents identified in Project Closeout/Final Payment Checklist attached as Appendix A to the General Conditions of the Contract; and

3) the Owner, the Engineer, Construction Project Manager, and the City of Syracuse, and any other parties named in the Special Project Conditions, their officers, members, agents, and employees, from and against any and all damages, claims, causes of action, losses, or expenses that may arise by reason of damage, injury or death, or for invasion of personal or property rights, of every name and uature, and whether casual or continuing trespass or nuisance, and any other claim for damages arising at law or in equity alleged to have been caused by, to arise from or be sustained by the Owner, the Engineer, Construction Project Manager and the City of Syracuse, and any other parties named in the Special Project Conditions in whole or in part by or because of misfeasance, failure to perform any obligation or duty, omission of duty, negligence or wrongful act on the part of the Contractor, its subcontractors, and their employees or agents, or because of any joint failure to perform any obligation or duty, omission of duty, negligence or wrongful act on the part of the Contractor or Owner, the Engineer and/or Construction Project Manager, their officers, agents or employees in connection with this Agreement.

The Contractor further covenants and agrees to obtain the necessary insurance as required by the General Obligations Law of the State of New York to effectuate this Hold Harmless clause.

Article 12 – CONFLICT OF INTEREST.

12.01. Conflict of Interest.

A. Affidavit: At the time the Contract is executed and, prior to performing any services, the Contractor shall serve upon the County Attorney the attached Affidavit certifying that the Contractor has no interest and will not acquire any interest, direct or indirect, that would conflict in any manner or degree with the performance of services to the County. The Affidavit shall further state that the Contractor agrees that in the rendering of services to the County no persons having any such interest shall be employed by the Contractor. The Contractor assumes full responsibility for knowing whether its employees or agents have any such interest and in certifying the absence of such conflict to the County.

B. Duty to Disclose: During the course of performing services for the County, the Contractor agrees to disclose immediately to the County, by Affidavit, every known or apparent conflict of interest and every ostensible or potential conflict of interest of the Contractor, its employees and agents. The duty to disclose is a continuing duty. The Contractor agrees that disclosure is a material obligation of the contract and that failure to comply with these provisions affords the County the right to pursue any and all remedies for breach of contract. In the event of an apparent or actual conflict of interest during the course of performance, the Contractor agrees that all work, services and payments shall be suspended pending final approval by the County or the County Board of Ethics. If the conflict cannot be resolved to the satisfaction of the County, the County may terminate the contract by written notice. Nothing herein shall be construed as limiting or waiving the County's right to pursue damages or other remedies.

A conflict of interest includes any circumstance which might influence or appear to influence the judgment of the Contractor, and the Contractor shall disclose the same. The Contractor shall disclose further the acceptance of compensation, monetary or otherwise, from more than one (1) payor or party for services on the same project or related project. The Contractor shall disclose further the direct or indirect solicitation or acceptance of financial or other consideration from parties other than the County for such work on the project to which this contract pertains. If applicable, the Contractor shall disclose further the direct or indirect acquisition of any interest in the real estate which is the subject of the project, or in the immediate vicinity thereof. A conflict of interest on the part of the Contractor's employees or agents shall be deemed a conflict of interest on the part of the Contractor, giving rise to the same duty to disclose.

C. Duty to Maintain Confidentiality: The Contractor agrees not to disclose any data, facts or information concerning services performed for the County or obtained while performing such services, except as authorized by the County in writing or as may be required by law, funding or financing agreements.

Article 13 – ASSIGNMENT.

The Contractor agrees that it shall not assign, transfer, convey, subcontract or otherwise dispose of this Agreement or its responsibility to perform under this Agreement or its right, title or interest in and/or to the same, nor any part thereof, nor to any monies which are or will become due and payable to it thereunder, nor the power to execute such Agreement to any other person, company or corporation without the prior express written consent of the County of Onondaga.

Article 14 – INDEPENDENT CONTRACTOR.

For the purposes of this contract, the Contractor shall be considered an independent contractor and hereby covenants and agrees to act in accordance with that status, and the Contractor, the employees and agents of the Contractor shall neither hold themselves out as nor claim to be officers or employees of the County of Onondaga, and shall make no claim for, nor shall be entitled to, workers' compensation coverage, medical and unemployment benefits, social security or retirement membership benefits from the County.

Article 15 – LICENSES AND PERMITS.

The Contractor hereby agrees that it will obtain at its own expense all licenses or permits for the work performed under this contract, if any are necessary, prior to the commencement of work.

Article 16 – CONTRACT MODIFICATIONS.

This Agreement represents the entire and integrated agreement between the County and the Contractor and supersedes all prior negotiations, representations or agreements either written or oral. This Agreement may be amended only by written instrument signed by both the County and the Contractor, in accordance with the Contract Documents.

Article 17 – STATUTORY COMPLIANCE.

In acceptance of this Agreement, the Contractor covenants and agrees to comply in all respects with all Federal, State and County laws which pertain hereto regarding services for municipal corporations including but not limited to Workers' Compensation and Employers' Liability Insurance, hours of employment, wages and human rights. The provisions required to be included in this contract by Section 220-e of the Labor Law are deemed to be incorporated by reference herein.

Article 18 – CLAUSES REQUIRED BY LAW.

The parties hereto understand and agree that each and every provision of law and clause required by law to be inserted in this Agreement shall be deemed to have been inserted herein, and if through mistake or inadvertence such provision is not inserted, said clause shall be deemed to have been inserted and shall have the full force and effect of law.

Article 19 – ADDENDA.

The following Addenda have been made and included in this Agreement prior to execution

_____.

IN WITNESS WHEREOF, the parties to this Agreement have hereunto set their hands and seals and have executed this Agreement, in five copies the day and year first above written.

COUNTY OF ONONDAGA (Owner)

(SEAL) By:_____
Joanne M. Mahoney, County Executive

(SEAL) _____
Contractor

By:_____

ACKNOWLEDGEMENT OF OFFICER OF OWNER ATTESTING CONTRACT

State of New York)
)
County of Onondaga) ss:

On _____, 20__, before me, the undersigned, a Notary Public in and for said State, personally appeared Joanne M. Mahoney , Onondaga County Executive as _____ _____, personally known to me or proved to me on the basis of satisfactory evidence to be the individual whose name is subscribed to the within instrument and acknowledged to me that she executed the same in her capacity, and that by her signature on the instrument, the individual, or the person upon behalf of which the individual acted, executed the instrument.

_____
Notary Public

ACKNOWLEDGEMENT OF CONTRACTOR

State of New York)
)
County of _____) ss:

On _____, 20__, before me, the undersigned, a Notary Public in and for said State, personally appeared _____ as _____, personally known to me or proved to me on the basis of satisfactory evidence to be the individual whose name is subscribed to the within instrument and acknowledged to me that (s)he executed the same in his/her capacity, and that by his/her signature on the instrument, the individual, or the person upon behalf of which the individual acted, executed the instrument.

_____
Notary Public

FAIR EMPLOYMENT CLAUSE

During the performance of this contract, the Contractor or Vendor agrees:

a) That he will not discriminate against employee or applicant for employment on the basis of race, religion, age, color, sex or national origin in the performance of this contract. The Contractor shall carry out applicable requirements of 40 CFR Part 33 in the award and administration of contracts awarded under EPA financial assistance agreements. Failure by the Contractor to carry out these requirements is a material breach of this contract which may result in the termination of this contract or other legally available remedies

b) That he will cooperate with the Human Rights Commission of Syracuse and Onondaga County in implementing the Fair Employment Program adopted pursuant to Resolution No. 282, adopted by the Onondaga County Legislature on June 4, 1973, a copy of which is on file in the office of the Director of Purchase of the County of Onondaga.

c) That he will provide to said Commission relevant information or reports required under said resolution or administrative regulations adopted pursuant thereto."

_____ _____

(Signature) (Date)

_____

(Firm)

CONFLICT OF INTEREST

AFFIDAVIT

State of New York)
)
County of Onondaga) ss:

_____, being duly sworn, deposes and says that:

1. I, _____, am an independent contractor, and have this date signed a contract to provide services to the County of Onondaga.

2. I certify that, as the Contractor, I have no interest nor will I acquire any interest, direct or indirect, which would conflict in any manner or degree with the performance of these services to the County.

3. I agree that in the rendering of services to the County, no persons having any such interest shall be employed by me. I assume full responsibility for knowing whether my employees or agents have any such interest and hereby certify that no such interest exists.

Dated: _____ 20___ BY:_____

Sworn before me this _____ day of

_____, 20____.

_____
NOTARY PUBLIC

CERTIFICATE OF INSURANCE

THIS CERTIFIES to the Onondaga County Department of Water Environment Protection, 650 Hiawatha Boulevard, West,Syracuse, New York 13204, that the following described policies have been issued to:

NAME & ADDRESS_____

OF INSURED_____

COVERING (PROJECT)_____

Kind of Insurance	Company & Policy No.	Expiration Date	Limits of Liability
Workers Compensation & Employers Liability			Statutory
Disability Benefits Law			Statutory
Comprehensive General Liability			CSL of $1,000,000 Occ/$1,000,000 Agg in the Primary Policy
Comprehensive Auto Liability			CSL of $1,000,000 Per Occurrence in the Primary Policy
Umbrella			$10,000,000
Owner's Protective & Contractual Liability			A CSL of $2,000,000 per Occurrence in the Primary Policy.

The above-described policies specifically provide the following features or contain the following provisions, by endorsement specifically for this project if necessary;

1. The above policies will not expire and/or nonrenew, be cancelled for any reason or restricted in coverage until at least thirty (30) days prior written notice has been given, by Certified Mail, to the Onondaga County Department of Water Environment Protection and the Onondaga County Department of Law.

2. The Comprehensive General Liability Policy specifically includes Premises Operations; Independent Contractors; Completed Operations; Blanket Broad Form Contractual Liability; Broad Form Property Damage; Explosion, Collapse and Underground Hazards; and Personal Injury Liability coverages.

3. There is no exclusion for actions on a Contract by a third party beneficiary arising out of a project for a public authority in the Owner's or the Contractor's Contractual Liability policies.

4. The above-described policies have been endorsed as necessary to provide the limits of liability indicated.

5. Automobile Liability coverage applies to owned, nonowned and hired automobiles and includes the MCS-90 endorsement.

6. The CGL, Auto and Umbrella policies have been endorsed to include the County of Onondaga, and other parties as identified in Section 11.01A and in the Special Project Conditions, as additional insureds on a primary and non-contributing basis.

7. The CGL and Auto policies contain a Cross Liability or Separation of Insured clause.

8. All operations of the Contractor under this contract are covered by the insurance provided.

9. Coverage for _____

   operation(s) is provided.

_____ _____

(Name of Insurance Agency) (Signature of Authorized Representative)

_____ _____ _____

(Address of Insurance Agency) (Phone No.) (Date)

SPECIAL PROJECT CONDITIONS

P-001. Location and Description of Project.

The project will generally consist of connection to the termination of the 144-inch diameter Midland Avenue Conveyance pipeline constructed under the Midland Avenue RTF and Conveyances, Phase Two Project located on the north side of West Castle Street east of the intersection of Dearborn Place; construction of approximately 500 linear feet of 96-inch diameter pipeline from the current termination mentioned above west along West Castle Street, crossing South Avenue to a point on the west side of the intersection of South Avenue and West Castle Street; construction of the South Avenue Regulator Structure; construction of two Conveyance Flushing Chambers; and construction of approximately 500 linear feet of 12-inch diameter storm sewer and associated manholes and catch basins.

P-002. Receipt and Opening of Bids.

The County of Onondaga (herein called the Owner) invites bids on the forms attached hereto. Bid instructions are given in the Contract Documents including the Advertisement, Bid, and Information to Bidders sections of these Contract Documents.

The envelopes containing the Bids must be sealed and addressed to the Director, Onondaga County Division of Purchase, 13th Floor Civic Center, 421 Montgomery Street, Syracuse, New York 13202. The outside of the envelopes must bear the name and address of the Bidder, and "Bid for the construction of CSO 044 Conveyance Project."

All blank spaces in the Bid Forms must be appropriately filled in with ink and with both words and figures and the Bid must be properly and completely executed.

Bids will be compared on the basis of the correct total Bid after corrections are made in accordance with I-2.06 Discrepancies in Bids. As such, the lowest Bid will be that correct Bid which is for the lowest number of dollars.

A bidder shall not submit unbalanced bids. Unbalanced pricing may increase performance risk and/or result in payment of unreasonably high prices and/or advanced payments. A bid is unbalanced if, in the Owner's opinion, the bid prices are materially unbalanced between line items or sub-line items. The Owner will consider the total Bid in determining whether or not the bidder has submitted a materially unbalanced bid. A bid will be deemed to be materially unbalanced when a bid is based on prices that are significantly less than the cost for that work, with other prices that are significantly overstated in relation to the cost for other work, and if there exists, or there may arise, a reasonable doubt that the bid would result in the lowest overall cost to the Owner, even though the bid may be the apparent low bid. An unbalanced bid also includes bids which have the effect of advancing to the Contractor sums not equal to the work performed and unit prices which do not reflect the value of the units actually provided. A bid will also be deemed materially unbalanced when a bid is so structured as to be tantamount to allowing advanced payment(s).

If in the Owner's opinion an offer is materially unbalanced, the Owner will (i) consider any risks to the County associated with the unbalanced pricing; and (ii) consider whether award of the contract would result in payment of unreasonably high prices for contract work or materials or an advanced payment(s); and (iii) the Owner in its sole discretion shall be entitled to reject as non-responsive any Bid that the Owner considers to be a materially unbalanced bid.

The award of the Contract will be made to the low, responsive, responsible Bidder who, in the opinion of the Owner, has not submitted an unbalanced bid and is qualified to perform the work required and is responsible and reliable.

The Owner may consider informal any Bid not prepared and submitted in accordance with the provisions hereof including all Contract Documents and may waive any informalities in or reject any or all Bids. Any Bid may be withdrawn prior to the scheduled time for the opening of the Bids or authorized postponement thereof. No Bidder may withdraw a Bid within forty-five (45) days after the actual date of the opening thereof.

P-003. Pre-Bid Meeting/Site Visit.

An informational pre-bid meeting will be held on August 25, 2010 at 11:00 A.M. local time at the offices of the Onondaga County, Department of Water Environment Protection, Metropolitan Syracuse Wastewater Treatment Plant, Plant Operations Center, 650 Hiawatha Boulevard West, Syracuse, New York 13204.

Following the pre-bid meeting, a site visit will be conducted for interested parties. A tour of the site will be conducted by a representative of the Owner at this time.

P-004. Revisions to Information for Bidders.

Paragraph I-1.02 Existing Conditions and Subsurface Conditions of the Information for Bidders is hereby deleted in its entirety and replaced with the following:

"I-1.02 Existing Conditions and Subsurface Conditions

The work will be performed through subsurface conditions which have been investigated for the purpose of developing assumptions about ground conditions. Both a Geotechnical Data Report (GDR) and Geotechnical Baseline Report (GBR) have been prepared based on this information and are part of these Contract Documents.

The primary objective of the GDR is to present the results of geotechnical investigations conducted for the project in a factual manner. These results include descriptions of field and laboratory investigations performed and procedures used, background physiography, regional geology information, and summaries of site subsurface conditions.

The primary objectives of the GBR are to present the interpretation of subsurface conditions; to discuss the basis of geotechnical design and construction; and to set baselines for geotechnical conditions expected to be encountered during construction.

The Contractor agrees that he shall not have nor assert against the Owner or Engineer any claim for damages for extra work or otherwise for relief from any obligation of this Contract based upon the failure by the Owner or Engineer to obtain or to furnish additional drawings or information or to furnish all drawings and information in the Owner's or Engineer's possession or based upon any inadequacy or inaccuracy of the drawings or information furnished, other than the Contract Documents.

Any holder of Contract Documents will be permitted to inspect the site of the work; verify existing architectural, structural and mechanical systems and finishes; make test borings, test pits, soundings, etc; on the site of the Work if he so desires subject to his first obtaining approval from

the Owner and any necessary permits from applicable agencies. It is understood that the party or parties receiving such approval must assume all risks and liabilities contingent thereto and shall restore the area to the satisfaction of the Owner."

Part S-002 Precedence of Contract Documents of the General Specifications is hereby deleted in its entirety and replaced as follows:

Conflicts of discrepancies among the Contract Documents, as defined in Article 4 of the Agreement and further described in Paragraph S-001 of the General Specifications, shall be resolved in the following order of priority:

i) The Agreement;

ii) Amendments, revisions or change order of later date take precedence over those of earlier dates;

iii) The Special Project Conditions;

iv) The General Provisions

v) The General Specifications

vi) Drawings and Technical Specifications – Drawings govern Specifications for quantity and location, Specifications govern Drawings for quality and performance. In the event of ambiguity in quantity and quality, the greater quantity and better quality shall govern.

vii) The Geotechnical Baseline Report

viii) The Geotechnical Data Report

ix) Figured dimensions govern scale dimensions, and large scale Drawings govern small scale Drawings:

x) The Bid;

xi) The Information for Bidders;

xii) The Definition of Terms; and

xiii) The Advertisement.

Part S-026 Existing Features Found Different of the General Specifications: Delete the first two paragraphs and replace with the following:

When any existing surface or subsurface feature is found to be materially different than represented by the Contract Documents or than could have been observed prior to bidding, the Contractor shall immediately notify the Owner prior to disturbing the feature.

The contractor shall promptly, and before such conditions are disturbed, notify the Owner in writing of: (1) Subsurface or latent physical conditions at the site differing materially from those indicated in the Contract Documents, or (2) unknown physical conditions at the site, of an unusual nature, differing materially from those ordinarily encountered and generally recognized as inhering in work of the character provided for in the Contract Documents. The Owner shall promptly

investigate conditions, and if it finds that conditions materially differ and will cause an increase or decrease in the Contractor's cost or the time required to perform any part of the work under this Contract, whether or not changed as a result of such conditions, an equitable adjustable shall be made and the Contract modified in writing. Any change in the Contract Documents necessitated by the conditions found different shall be accomplished in accordance with the Changes Section of the General Provisions. Any claims arising out of the conditions found different shall be administered in accordance with Subsection G-5.02 of the General Provisions.

No claim to the Contractor under this clause shall be allowed unless the Contractor has given the notice required above. However, the Owner may extend the time prescribed above. No claim by the Contractor for an equitable adjustment shall be allowed if asserted after the final payment under this Contract.

P-005. Owner's Engineer.

The technical specifications and drawings were prepared by Environmental Engineering Associates, LLP (EEA), 6723 Towpath Road, Syracuse, NY 13214-0066, Telephone: 315-446-9120; Fax: 315-446-7485. Questions concerning the Contract Documents shall be addressed in writing to Ms. Kristin L. Angello, P.E. Electronic transmittal of questions to Kristin L. Angello, P.E. (at kristin. angello@arcadis-us.com) is also acceptable.

Environmental Engineering Associates, LLP is the Owner's Engineer for this project. Any references in the Contract Documents to "Construction Project Manager", "CPM" or "Owner's Representative" shall mean the Engineer.

P-006. Time is of the Essence.

As indicated in Section I-6.03, Amended Consent Judgment Project Conditions – Time is of the Essence, this project is being constructed pursuant to an Amended Consent Judgment (ACJ) No. 88-CV-0066. The ACJ completion schedule for this work is as follows:

DESCRIPTION	DATE
Complete Construction and Commence Operation	December 31, 2011

All contract work is required to be complete within 270 calendar days of the written Notice To Proceed.

Failure by the Contractor to meet this schedule will result in liquidated damages and assessments as outlined in the General Provisions, Section 4 Time Provisions, and other applicable contract provisions. In addition to such liquidated damages, assessments, costs and other damages, since time is of the essence, failure by the Contractor to satisfactorily meet this contract schedule will result in the assessments as outlined in Section I-6.03, Amended Consent Judgment Project Conditions – Time is of the Essence as a result of missed milestones under the Consent Judgment. It is the Contractor's sole responsibility to monitor the rate of progress of the work to ensure all contract times are met. Activities including, but not limited to, the following are to be conducted by the Contractor to maintain the required rate of progress of the work: performance of appropriate planning, scheduling of work force (including additional hours, days and/or shifts), the necessary application of resources, and coordination with other ongoing contracts; any and all of which shall be at no additional cost to the Owner.

P-007. Order of Work.

The Contractor is advised that the time schedule for completion of construction is identified in P-006. The Owner has established limits of construction for this project. The limits of construction are shown on the Contract Drawings.

It shall be the Contractor's responsibility to develop and present a detailed schedule in accordance with the requirements of the Special Project Conditions and other parts of the Contract Documents which is generally consistent with the following order of work:

A. Mobilization

1. Complete mobilization of site, including temporary road bases, temporary equipment and material storage areas; installation of field offices; installation of temporary electrical, water, sewer, and other required services to field offices; and other miscellaneous mobilization tasks.

2. Develop geotechnical instrumentation monitoring plan, temporary excavation support system plan, dewatering plan and bypass plan for maintenance of sewer flows.

B. General Order of Work

1. Installation of temporary security fencing.

2. Installation of erosion and sediment control measures.

3. Removal of brush, debris and paved surfaces as necessary.

4. Temporary installation of bypass pumping systems and gravity bypass systems for maintenance of sewer flows, as applicable.

5. Construct portions of existing utilities to be relocated. Test and place into service. Remove and dispose or abandon (as shown on the Contract Drawings) portions of existing utilities which have been relocated.

6. Rock extrication if necessary.

7. Installation of temporary excavation support system.

8. Installation of trench dewatering systems.

9. Construct conveyance pipeline, CSO conveyance flushing chambers, conveyance manholes, regulator structures, and associated combined sewers and manholes.

10. Removal of temporary excavation support system, unless ordered otherwise by the Engineer.

11. Leakage testing of pipeline and associated structures.

12. Testing of CSO conveyance flushing chamber equipment including field performance testing.

13. Installation of storm sewer system, bioretention basin and bioretention swales.

14. Removal of temporary security fencing.

15. Demobilize temporary facilities.

16. Restoration and installation of plantings.

17. Removal of erosion and sediment control measures after soil stabilization.

P-008. Pipe Material References.

Piping designs and layouts for the new CSO 044 Conveyance and new combined sewers are shown on the Contract Drawings based upon the use of large diameter high density polyethylene pipe (HDPE) for pipe diameters from 42-inches through 96-inches, and polyvinyl chloride pipe (PVC) for pipe diameters less than 42-inches. The Contractor may provide alternate pipe materials for these pipelines in accordance with the pipe schedule Section 3.16 of Technical Specifications Section 02530 – Sewage and Drainage Piping Installation.

P-009. Project Funding Agencies.

This project is funded in part by the following State and Federal agencies:

United States Environmental Protection Agency (USEPA)
New York State Department of Environmental Conservation (NYSDEC)
New York State Environmental Facilities Corporation (NYSEFC)
American Recovery and Reinvestment Act (ARRA)

As such, all contractors shall be responsible for compliance with all applicable Onondaga County, New York State, and federal government requirements associated with these funds. Where conflicting criteria exist between regulatory agencies, the more restrictive requirements and conditions shall apply.

P-010. Contractor's Insurance.

Include as an additional insured on a primary and non-contributing basis on all policies, consistent with Article 11 of the Agreement, the following:

City of Syracuse, New York
The Owner of 807-809 South Avenue, Syracuse, New York, presently Clarence Dunham of 824 South Avenue, Syracuse, New York*

* Regarding the Owner of 807-809 South Avenue, Syracuse, New York refer to Special Project Conditions Section P-044.

P-011. Hold Harmless, Defense and Indemnification.

Consistent with Article 11, Section 11.07 of the Agreement, the Contractor shall indemnify, defend and hold harmless the following parties in accordance with said paragraph:

City of Syracuse, New York
The Owner of 807-809 South Avenue, Syracuse, New York, presently Clarence Dunham of 824 South Avenue, Syracuse, New York*

* Regarding the Owner of 807-809 South Avenue, Syracuse, New York refer to Special Project Conditions Section P-044.

P-012. Site Safety Responsibilities and Roles.

It is the objective of the Owner that the Contractor maintain all construction worksites administered by the Owner in a safe, neat and orderly condition, and free from human hazard. It is the policy of the Owner that if an unsafe condition is encountered, the affected activity shall be suspended until the unsafe condition is corrected.

As clearly stated in the Contract Documents, the Contractor has the sole responsibility for ensuring that the construction worksite is safe, neat and maintained in an orderly condition, and is free from human hazard. The Contractor is also solely responsible by law for compliance, and regulatory reporting requirements, for all workplace and employee safety issues.

The Contractor's designated On Site Safety Representative will be the sole point-of-contact for all safety issues and shall have the authority to stop work and implement corrective procedures.

The Contractor is required to submit a Project Specific Safety Plan prior to mobilization. The Project Specific Safety Plan shall outline the Contractor's actions that will ensure that the project site is maintained in a safe, neat and orderly condition, and is free from human hazard. The Project Specific Safety Plan shall also contain written procedures for the Contractor's compliance with governmental safety laws and associated reporting requirements.

At a minimum, the Project Specific Safety Plan shall include the following:

- Project Safety Objective Statement
- Safety Responsibilities and Roles within the Contractor's Organization
- The Contractor's Safety Policy Requirements for Subcontractors
- Mandatory Guidelines for the use of Personal Protective Equipment
- Emergency Response Procedures including routes to nearest Hospitals
- Procedures for Reporting Accidents
- Site Security Procedures
- Procedures for Governmental Agency Compliance Reporting
- Procedures for the Protection of the General Public
- Procedures for the Protection of Project Site Visitors
- Safety Procedures related to the Maintenance and Protection of Traffic
- Hazard Communication Program
- Confined Space Program
- Lockout and Ground Fault Protection Procedures
- Identification of the proposed Site Safety Representative and Competent Person, including credentials.
- Hazard Analysis for all major work items.

- Rigging and Crane Safety Procedures
- Statement acknowledging that the Contractor is solely responsible for construction worksite safety issues.
- Health and Safety Plan for Impacted Materials Handling.

The Contractor is required to hold weekly safety meetings with their personnel to teach and enforce the Contractor's safety policies as outlined in the Project Specific Safety Plan. Records of these meetings, including a list of attendees, shall be transmitted to the Engineer within a week of the meeting and shall become part of the project record.

Failure of the Contractor to provide an appropriate Project Specific Safety Plan, or failure of the Contractor to provide a record of the weekly safety meetings, may result in the withholding of payments to the Contractor.

P-013. Specific Permit Information.

1. General

The Owner has made application to the appropriate agencies for permits listed in this section on behalf of the Contractor. Other permits required shall be the responsibility of the Contractor. In all cases, for all permits, whether applied for by the Owner or the Contractor, the Contractor shall be responsible for payment of all required fees, charges, maintenance, bonds, insurance, and penalties or fines for non-compliance, associated with all required permits. It shall be the Contractor's responsibility to obtain the appropriate permits from the City of Syracuse Department of Public Works for work within any City rights-of-way.

2. SPDES General Permit for Storm Water Discharges From Construction Activities

The Owner is in the process of filing notice of intent for the SPDES General Permit for Stormwater Discharges from Construction Activity (Permit GP-0-10-001) for the project. The Owner has also prepared a Stormwater Pollution Prevention Plan (SWPPP). The SWPPP outlines responsibilities of the Contractor to reduce the potential for erosion and sedimentation and stormwater runoff pollution during construction activities. The Owner is the permitee and the Contractor shall comply in all respects with the requirements of the SWPPP.

3. NYSDEC Groundwater Discharge Best Management Practices Plan

The Owner has received approval from the New York State Department of Environmental Conservation (NYSDEC) for the discharge of groundwater from dewatering activities at the site to Onondaga Creek subject to implementation of the Owner's best management practices to limit the total in-stream chloride concentration in Onondaga Creek downstream of dewatering activities.

The Contractor shall connect individual groundwater dewatering wells in each work area to a common manifold system to allow for a single point of monitoring and discharge to Onondaga Creek. The Contractor shall provide flow metering equipment necessary to continuously monitor the groundwater flow rate being discharged from each individual groundwater dewatering well and at the discharge point to Onondaga Creek. The Contractor shall be responsible for maintaining a Groundwater Dewatering Record which includes the following information:

- Daily monitoring of each dewatering well for chloride and flow
- If colormetric testing kits are to be used for daily chloride monitoring, laboratory analysis for chlorides shall be conducted at least biweekly (i.e., once every two weeks) to confirm the results from the colormetric testing kits
- A daily description of any mitigation measures in place to limit the concentration of chlorides in Onondaga Creek

The Contractor shall provide the laboratory analytical results, field test results, and flow rate information from the groundwater dewatering record to the Engineer on a daily and bi-weekly (i.e., once every two weeks) basis, as described above, and within 24 hours of the Contractor obtaining field and laboratory results.

The Owner is responsible for preparing a summary of the estimated in-stream chloride concentration in Onondaga Creek as it relates to this project and its groundwater discharges as well as other concurrent Owner-sponsored construction projects and providing this summary to the NYSDEC during construction dewatering operations. The Owner will notify the Contractor when the daily average in-stream chloride concentration of Onondaga Creek exceeds 750 milligrams/liter (mg/l). Mitigation measures shall be implemented by the Contractor as ordered by the Owner and/or Engineer when the estimated in-stream chloride concentration in Onondaga Creek is equal to or above 750 mg/l. This in-stream concentration is a threshold value that indicates the need to implement mitigation measures described herein as a Best Management Practice to ensure the in-stream chloride concentration does not exceed 860 mg/l. Mitigation measures include, but are not limited to, the following:

- Varying Pumping Rates – This includes limiting the flow rate from groundwater dewatering wells with the highest concentrations of chlorides, increasing the flow rate from groundwater dewatering wells with the lowest concentrations of chlorides, decreasing the total groundwater pumping rate, or a combination of any of the three.

- Flow Diversion – This includes diverting flow from groundwater dewatering wells to sewers within the Owner's collection system (main interceptor sewer). The Owner has granted approval for the discharge of groundwater from site dewatering activities to be conveyed to their collection system as a mitigation measure to reduce in-stream chloride concentration.

- Groundwater Recharge – This includes discharge of groundwater flows to underlying soils for the purpose of groundwater recharge.

The Contractor shall have on- site, all piping, valves, flow metering equipment, and other required appurtenances necessary to connect any or all groundwater dewatering wells to the nearest main interceptor sewer manhole. Each discharge to the Owner's collection system shall be monitored in accordance with the OCDWEP Groundwater Discharge Permit, which must be secured prior to discharging to the Owner's collection system.

The Contractor shall notify the Engineer, and the Owner shall notify the NYSDEC prior to discharging any groundwater from dewatering or other construction-related activities. The Contractor shall submit a copy of his proposed dewatering plan to the Engineer for review and approval in accordance with Specification Section 02140 - Dewatering.

The full Groundwater Dewatering Record shall be submitted to the Engineer within 10 business days of the conclusion of groundwater dewatering operations. In addition to the requirements described above, the Groundwater Dewatering Record shall include the following items:

- all monitoring data and results
- all threshold notifications
- description of all implemented mitigation measures, and other remedial actions, along with the reasons for their implementation
- associated calculations and computations

4. OCDWEP Groundwater Discharge Permit

The Owner has granted approval for the discharge of groundwater from site dewatering activities to be conveyed to their collection system as a mitigation measure to reduce in-stream chloride concentration. The Contractor is responsible for complying with requirements established in the Groundwater Discharge Permit including the established allowable concentration limitations.

The Contractor shall provide the flow metering equipment necessary to continuously monitor the groundwater flow rate being discharged to the collection system. The Contractor shall notify the Engineer prior to discharging any groundwater from dewatering or other construction-related activities. The Owner will require the Contractor to submit a copy of his proposed dewatering plan for review and approval, in accordance with Specification Section 02140. A copy of the OCDWEP "Procedures Governing the Acceptance and Treatment of Groundwater and Other Contaminated Wastewater" is contained in Supplemental Information – Part of the Contract Documents.

5. All work in public rights-of-way will require that the Contractor prepare and obtain a City of Syracuse Street Cut Permit from the City of Syracuse Department of Public Works, 1200 Canal Street Ext., Syracuse, New York 13210, phone no. 315-448-8500. All permitting fees are the responsibility of the Contractor.

6. All work on private sanitary sewer laterals and potable water services will require that the Contractor prepare and obtain an Onondaga County Plumbing Control Permit from the Onondaga County Plumbing Control, 7120 Henry Clay Boulevard, Liverpool, New York 13088, phone no. 315-435-5402.

P-014. Contaminated (Impacted) Materials Requirements.

The Owner is aware that non-hazardous contaminated (impacted) soils may be located at the project site. Nonhazardous, impacted soil excavated as part of the construction activities may be reused by the Contractor as backfill, provided that the soil is used as backfill from the same excavation or excavations containing similar contaminants at the same site. If reused, the Contractor shall place the nonhazardous, impacted soil at depths above the groundwater table and below a minimum depth of three feet below the existing ground surface. The Contractor shall not use the nonhazardous, impacted soil as backfill if screening and/or crushing is required to meet the backfill requirements presented in the Contract Documents.

The Contractor shall not use the nonhazardous, impacted soil as backfill if the Contractor, Owner or Engineer determines that visual contamination (i.e., staining, oily substances, sheens) and/or unusual

odors are present. These materials shall be removed and disposed of in accordance with the requirements of the Contract Documents; and, in particular, the "Lake Improvement Project Construction Environmental Response Plan". The Lake Improvement Project Construction Environmental Response Plan is attached to Section 02224, Impacted Materials Handling.

Non-hazardous, impacted soils determined by the Owner or the Engineer to be unsuitable for reuse shall be considered Non-Hazardous Industrial Waste.

P-015. Storage of Equipment and Materials.

The Contractor shall provide secure temporary storage facilities for all equipment and materials delivered to the site and required to complete the work of this Contract.

For the benefit of the Contractor, the Owner hereby makes it known that the available area for equipment and materials storage within the project limits and along the route of the proposed sewer is limited and off-site storage of materials and equipment may be required to be provided at no additional cost to the Owner. All temporary storage facilities at the site are subject to the approval of the Owner and Engineer.

Due to the above, the Contractor is prohibited from storing equipment and materials on any part of the site except immediately in advance of the portion of the work for which the equipment and materials are required and in areas designated on the Contract Drawings for storage of equipment and materials. All material to be stored on site shall be contained within temporary security fencing. The Contractor shall restore areas used for storage to existing conditions or better immediately upon removal of equipment and materials.

P-016. Non-Working Hours Construction Noise Limits.

The maximum allowable sound levels generated by construction activities outside of normal working hours (Weekdays, 7:00 a.m. to 6:00 p.m.) shall not exceed the following:

55 decibels (dBA) at 50 feet distance from source.

All construction equipment and activities shall conform to these maximum allowable noise levels outside of normal working hours.

P-017. Work Near Gas Mains.

The Contractor is advised that the Work of this Contract will encounter gas mains, including high pressure gas mains owned by National Grid as shown on the Contract Drawings. Locations are approximate and must be verified by the Contractor.

Additional gas mains may possibly be located during pre-construction utility locating activities, as described in General Specifications Section S-025 - Protection and Restoration of Existing Structures, Facilities, and Features.

P-018. Equipment Manufacturer's Electronic Manuals and Information.

In addition to the requirements detailed in General Specifications Section S-038 - Equipment Manufacturers' Manuals and Information, electronic equipment manuals shall be submitted for the equipment listed in Special Project Conditions Section P-030 – Schedule of Equipment Testing and Manufacturers' Services.

Electronic submittals shall meet the following requirements:

1. Electronic equipment manual files shall be submitted in Adobe Acrobat Reader (.PDF) format unless otherwise mutually agreed upon by Contractor and Engineer.

2. In addition to the complete manual submitted in PDF format, the supplier shall furnish electronic files containing the following information in Microsoft Word (.doc), rich text (.rtf), or ASCII text (.txt) format.

    a. Operation Description – Discuss operational procedures for the equipment supplied. Operational procedures shall include "startup procedures," "normal operation," "automated operation," and "shutdown procedures." Where multiple modes of automatic operation exist, describe each mode separately.

    b. Controls - Provide a table outlining the controls provided for the unit. Utilize two columns in the table. The left-hand column shall indicate the location of the control (e.g., local to the pump, remote control panel, etc.). In the right-hand column describe the control and its function.

    c. Troubleshooting - Provide a troubleshooting table with three columns entitled "Problem," "Possible Causes," and "Corrective Action," Under the "Problem" column, identify possible problems that may occur with the equipment or system including, but not limited to, all malfunctions that can be expected for the equipment and all alarm indications provided by the system. Under the "Possible Causes" column, identify the causes that may be the root of each "Problem." Under the "Corrective Action" column, provide direction to verify and rectify/repair the "Problem."

    d. Preventive Maintenance - Provide a preventive maintenance table containing headings for "Daily", "Weekly", "Monthly", and "Annual" (or other period as required) maintenance requirements. Under each heading, indicate visual inspections, procedural inspections, calibration routines, lubrication, and all other manufacturer-suggested preventive maintenance procedures required for the equipment or system. List recommended lubricants and any special tools required for the recommended maintenance, including disassembly and repair instructions.

    e. Nameplate Data - Provide nameplate data tables consisting of two columns. In the left-hand column, indicate the equipment name, equipment designation, manufacturer, model number, serial number, year installed, dimensions, min and max speed, min and max torque, measurement range, accuracy, and all other data that may assist maintenance persons in identifying, replacing, and maintaining the piece of equipment. Provide the appropriate values and designations in the right-hand column. Provide a separate nameplate data table for each major system component, including gear reducers, motors, etc. Motor nameplate data tables shall include as a minimum, manufacturer, model, serial number, enclosure type, voltage, speed, service factor, frame size, NEMA design, and

insulation class.

f. Manufacturer and Sales Representative Information - Indicate the equipment manufacturer name, mailing address, telephone number, fax number, email address, website address, and contact person's name. Provide the same information for the local manufacturer's representative who supplied the equipment.

3. Electronic files shall be submitted on one or more compact discs (650 MB CD). Two sets of compact discs shall be provided, one for Owner and one for Engineer. Compact discs and covers shall be labeled with the project name, supplier, equipment identification and specification section. Compact discs shall be provided in individual hard plastic cases.

4. Resubmitted equipment manuals shall contain a cover sheet indicating the status of the requested information and identifying where it was added or deleted from the manual.

P-019. Borings and Other Subsurface Information.

The work will be performed through subsurface conditions which have been investigated for the purpose of developing assumptions about ground conditions. Both a Geotechnical Data Report (GDR) and a Geotechnical Baseline Report (GBR) have been prepared based on this information.

The primary objective of the GDR is to present the results of geotechnical investigations conducted for the project in a factual manner. These results include descriptions of field and laboratory investigations performed and procedures used, background physiography, regional geology information, and summaries of site subsurface conditions.

The primary objectives of the GBR are to present the interpretation of subsurface conditions; to discuss the basis of geotechnical design and construction; and to set baselines for geotechnical conditions expected to be encountered during construction.

P-020. Disposal of Construction and Demolition Debris.

Exempt Construction and Demolition Debris, as defined in Section 02224 – Attachment A: Lake Improvement Project Construction Environmental Response Plan, may be used by the Contractor as backfill on this Project Site.

All construction and demolition debris (non-exempt), as defined in Section 02224 – Attachment A: Lake Improvement Project Construction Environmental Response Plan, generated by the performance of the work under this Contract, including materials excavated during the construction of underground improvements shall be disposed of at an approved landfill facility.

P-021. Reference Information.

Additional reference information is being made available by the Owner to Bidders, Contractors, and other interested parties to assist in the bid preparation. Neither such information nor the documents on which it may be shown shall be considered a part of the Contract Documents or Contract Drawings, it is being understood that such information is made available only as a convenience, without express or implied representation, assurance, or guarantee that the information is adequate, complete, or correct, or that it represents a true picture of the project conditions to be encountered, or that all pertinent information in the possession of the Owner or Engineer has been furnished. The Bidder or Contractor must interpret such information according to his own judgment.

P-022. City of Syracuse Survey Monuments.

The Contractor is advised that the work of this project will require the removal and replacement of several City of Syracuse survey control monuments. The Contractor shall provide the services of a Registered Land Surveyor, licensed in the State of New York, to establish the horizontal and vertical position of the existing monuments. The monuments shall be replaced in the exact location of the existing monuments and in accordance with the details shown on the Contract Drawings following restoration of the area. The Contractor's Land Surveyor shall also complete City of Syracuse written certification and obtain approval of the monument and certification from the City.

P-023. Air Quality.

The Contractor shall use only properly maintained equipment and vehicles that meet current regulatory thresholds for air emissions. The Contractor shall not allow excessive idling of equipment or vehicles at the site.

If the Contractor encounters excavated Impacted Materials as defined in Technical Specifications Section 02224 – Impacted Material Handling, the Contractor is required to develop and implement a Community Air Monitoring Plan as specified in Item 4.01(B) of Technical Specifications Section 02224.

P-024. Noise Meter.

The Contractor shall provide a portable, hand-held, calibrated noise dosimeter to the Engineer. The meter shall be capable of measuring on-site noise levels at a range of 0 to 150 decibels (dBA). The noise dosimeter shall comply to ANSI S1.4-1983, Type 2; IEC 651-1979, Type 2; and IEC 804, 1085, Type 2. Refer also to Special Project Conditions Section P-015 - Non-Working Hours Construction Noise Limits.

P-025. Schedule.

The Engineer will review and determine the acceptability of the Contractor's proposed construction schedule and observe the Contractor's rate of progress. It is the Contractor's sole responsibility to monitor the rate of progress of the Work to ensure that the project is completed within the time frame stipulated in the Contract Documents and that each scheduled project milestone is met. However, if in the view of the Engineer, the Contractor is in jeopardy of not completing the Work on time, or not meeting any scheduled project milestone, the Engineer may request that the Contractor submit a recovery schedule. The recovery schedule shall show, in such detail as is acceptable to the Engineer, the Contractor's plan to meet all scheduled project milestones and that the Work will be completed within the time frame stipulated in the Contract Documents. Failure of the Contractor to provide the Engineer with an acceptable recovery schedule within 30 calendar days of a request therefore shall result in the withholding of all future payments to the Contractor, until an acceptable recovery schedule is provided.

Within fourteen (14) calendar days after the date of The Notice to Proceed, the Contractor shall forward a List of Activities to the Engineer. The List of Activities shall be a comprehensive inventory of all work activities that will comprise the project. This shall include all contract times, the project start and finish dates, submission and approval of all project deliverables, all required tasks in the procurement cycle (submission of submittals, approvals, fabrication, delivery to the site), all construction work tasks, project closeout tasks including punch list and equipment testing, and all tasks required for the final acceptance of the work. The list shall also include the logistics between the individual activities and the requirements for any work. The intent of the List of Activities is to present an adequate number of

activities to clearly describe construction sequence and progress. The Contractor shall be responsible for scheduling of subcontractors and suppliers.

P-026. Disruption of Owner's Operations.

The Owner will not allow shutdowns of the existing sanitary and combined sewer facilities to occur. Disruption of Owner's operations may be allowed upon written authorization from the Owner.

P-027. Inspection of the Work.

Observation of the work of this contract will be performed by the Engineer. The Engineer is empowered by the Owner to determine the amount, primary acceptability, and fitness of all parts of the work, and to interpret the Contract Documents and any changes thereto, but this authority shall not give rise to any duty or responsibility of the Owner or the Engineer to the Contractor, subcontractors, or any of their agents or employees.

P-028. Maintenance of Sewer Flows.

The Contractor is advised that the combined sewer system tributary to the work site is subject to high flows and velocities during wet weather periods (refer to Technical Specifications Section 02190 Maintenance of Sewer Flows for requirements). It shall be the Contractor's responsibility to maintain wastewater flows during excavation of the work and to protect his equipment and materials from damage therefrom, as well as to protect public and private property from any damage therefrom.

P-029. Shop Drawing Submittal Procedures.

In addition to the provisions of General Specifications Section S-013 - Shop Drawings, the Contractor shall comply with the following shop drawing submittal procedures:

1. Transmit each submittal with the following format. Each submittal shall include all required information required for that specification. Incomplete submittals will be returned "Not Reviewed."

2. Sequentially number the transmittal forms. Resubmittals to have original number with an alphabetic suffix (i.e. 1, 1A, 1B, etc.).

3. Identify project, contractor, subcontractor, supplier, and pertinent Contract Drawing sheet and detail number(s) and specification section number, as appropriate.

4. Apply Contractor's stamp, signed or initialed certifying that review, verification of products required, field dimensions, adjacent construction work, and coordination of information, is in accordance with the requirements of the Work and the Contract Documents. Stamp shall show the following information:

    a. Shop Drawing Submittal Number _____

    b. Deviations: None:_____ ; As listed _____

    c. Reference Specification Number _____

    d. Reference Drawing Number _____

e. Space Requirement: As Designed_____ Different, As listed _____

f. Representation is made to the Owner and Engineer that the Contractor has determined and verified all field measurements and quantities, field construction criteria, materials, catalog numbers and similar data, that he has reviewed and coordinated the information in each shop drawing with the requirements of the Work and the Contract Documents, and hereby approves this submittal.
Contractor_____
Signature_____
Date_____

5. Schedule submittals to expedite the project, and to deliver to the Engineer. Coordinate submission of related items.

6. Identify deviations from Contract Documents and product or system limitations, which may be detrimental to successful performance of the completed work. Identify space requirements that differ from those designed or shown on Contract Documents.

7. Provide space for Contractor and Engineer review stamps.

8. Revise and resubmit submittals as required, identify all changes made since previous submittal. Resubmit in a timely manner.

P-030. Schedule of Equipment Testing and Manufacturers' Services.

In addition to the provisions of General Specifications Section S-038, the Contractor shall provide the following submittals, tests, services of manufacturer's representative, equipment manuals, and alignment criteria.

Equipment Item	**Specification Section**	**Performance Affidavit (P-031)**	**Shop Tests and Reports**	**Field Tests**	**Performance Tests**	**Startup Report / Certification (S-040)**	**Equipment Manuals (S-038)**	**Alignment Testing and Reporting**	**Services of Manufacturer's Factory Representatives Startup and Training (S-039)**		
									Installation/ Field Test (Days)	**Performance Test (Days)**	**Training (Days)**
Conveyance Flushing System	11297	Yes	Yes	Yes	Yes	Yes	Yes	Yes	1	1	1
Programmable Logic Controllers	17100	Yes[1]	Yes	No	Yes	Yes	Yes	No	8	2	2
PLC Programming	17101	Yes[1]	No	No	Yes	No	Yes	No	2	2	2
Ultrasonic Level Sensors	17300	Yes[1]	No	Yes	Yes	Yes[2]	Yes	No	1	1	¼
SCADA System	17500	Yes[1]	No	Yes	Yes	No	Yes	No	2	2	2

Notes
1. See Section 17000 Instrumentation
2. Certification required only if Engineer not present.

P-031. Performance Affidavits.

The Contractor shall submit performance affidavits as follows:

1. Provide performance affidavits for products listed in the Schedule of Equipment Testing and Manufacturer's Services included in the Special Project Conditions and as stated in the Technical Specifications.

2. Submit performance affidavits to Engineer as required.

3. By these affidavits, each manufacturer (supplier) must certify to the Contractor and the Owner, jointly, that he has examined the Contract Documents and that the equipment, apparatus, process or system he offers to furnish will meet in every way the performance requirements set forth in the Contract Documents. Equipment design, manufacturing and assembly specifications are an integral part of the performance requirements.

4. Shop drawings will not be reviewed prior to receipt by the Engineer of an acceptable performance affidavit.

5. The performance affidavit must be signed by an officer (vice president or higher) of the basic corporation, partnership or company manufacturing or supplying the equipment, and witnessed by a notary public.

6. The performance affidavits shall be in the following format:

   Addressed to: _____(Contractor)_____ and _____(Owner)_____
   Reference: Contract No. _____ (Project)
   Text: "_____(manufacturer's name)_____ has examined the Contract Documents and verified that the _____(product)_____ meets in every way the performance requirements and design specifications set forth in Section(s) _____ of the Contract Documents."
   Signature: Corporate officers shall be vice president or higher (unless statement authorizing signature is attached).
   Notary: Signature (s) must be notarized.

P-032. Beneficial Occupancy of Operating Equipment and Systems.

In addition to the provisions of General Specifications Section S-040, the following additional conditions for beneficial occupancy shall be met:

1. Contractor must submit manufacturer's certification that operating equipment satisfactorily meets alignment criteria as installed and running at normal operating conditions.

P-033. Pest Control.

In addition to the requirements of Section 01500, Temporary Facilities and Controls, the following additional conditions are required:

1. The Contractor, acting on behalf of the County, shall contract with a registered pesticide business that shall be responsible for developing and implementing an Integrated Pest Management (IPM) program for the project site. The IPM program shall be for the entire duration of the construction period and shall be adapted as necessary to accommodate the changing nature of the project site

and facilities as construction proceeds.

2. In addition to utilizing traditional pest control measures such as the application of pesticides and trapping, the IPM program shall also address structural and procedural changes, modifications, and recommendations necessary to limit the availability of food and water, and access to site facilities and structures used by pests.

3. The IPM Program shall allow for the complete suppression of all included pests within the site limits. The pest control contractor shall provide all supervision, labor (including travel), equipment, and materials to fully implement the IPM program. The pest control contractor is advised that due to the nature of the site, revisions to the IPM program will be necessary to address changing conditions. Revisions to the IPM program, including additional or increased service visits, equipment and materials shall be at no additional cost to the Owner. Structural, procedural, and sanitation recommendations made by the pest control contractor and under the control of The Contractor shall be implemented by the Contractor at no additional cost to the Owner.

4. The Contractor and his subcontractors are required to abide by the recommendations of the pest control contractor and shall limit the availability of food, water, and access to harborage by pests to site facilities and structures that are under their control. The Contractor and his subcontractors are required to keep their work, storage, break, and office trailers and areas, in a clean and sanitary condition in accordance with all applicable federal, state and local laws regulations and ordinances. The Engineer will notify the Contractor of any deficiencies noted by the pest control contractor. Contractor shall correct deficiencies or implement reasonable control strategies, as directed by the Engineer, at no additional cost to the Owner.

5. The IPM program shall control the following pests:

   - Populations of rodents, insects, and arachnids located within any structure, facility or utility. Structures, facilities or utilities may be temporary or permanent. Some examples of structures, facilities and utilities include, but are not limited, to the following:

     - Temporary facilities, such as modular office structure, office and storage trailers, sanitary facilities, refuse containers, guard shacks, equipment and material storage areas, break and first-aid areas and parking areas;

     - Utilities such as sewers (new and existing), pipelines, manholes, and vaults; and

     - Structures including the vacuum flushing chambers and regulator structures.

   - Populations of the above referenced pests that are within the boundaries of any site conveyance, structure, facility or utility, whether temporary or permanent. The boundary of a conveyance, structure, facility or utility shall extend ten feet from the perimeter or exterior face of any conveyance, structure, facility or storage area.

6. Pests excluded from control include:

   - Birds, snakes, bats and other vertebrates other than rodents. However, any bird, snake, bat, or other vertebrate that gains entrance to a conveyance, structure, facility or utility shall be removed by appropriate means or methods in compliance with all federal, state and local laws and regulations. Removal shall be on a time and materials basis as approved by the Engineer.

- Mosquitoes and flies;
- Insects that feed on outdoor vegetation; and
- Ants and termites not located within a conveyance, structure, facility or utility.

7. The pest control contractor shall visit and inspect the site and the surrounding neighborhood and develop a site-specific pest control plan. The pest control plan will identify pests to be controlled and will evaluate and describe the means and methods necessary to eliminate and control pests and prevent the migration of pests from the construction site to the surrounding areas. Once construction commences, the pest control contractor shall visit and inspect the site and surrounding neighborhood as often as necessary to ensure that the pest control plan adequately addresses conditions, procedures and pests identified in the plan.

8. The pest control contractor shall modify the pest control plan as necessary during construction to address changing conditions, modifications and additions to site conveyances, facilities, structures and utilities, or for any other reason, whether initially identified in the pest control plan or not, required to control pests at the site for the duration of the work. Changes and modifications to the pest control plan and any related procedures, including additional service visits, equipment or material needed to control pests shall be at no additional cost to the Owner.

9. As a minimum, the IPM program shall consist of a pest control plan which shall include and address the following elements:

   - Pests to be controlled. The pest control contractor shall identify potential pests that may be encountered and their control, based on the nature and location of the site, facilities to be constructed, and the activities to be conducted.
   - Pesticides and proposed methods of application. The pest control contractor shall provide current manufacturer's labels, product data sheets, application instructions, material safety data sheets (MSDS) and Environmental Protection Agency (EPA) identification numbers for all pesticides and baits to be utilized. Application methods shall be described in detail and shall include a discussion of health and safety procedures and controls for the applicator and potentially exposed individuals, such as site personnel and the general public.
   - Application, trapping, and monitoring equipment. The pest control contractor shall provide manufacturers technical information for all equipment to be utilized for the application of pesticides, baiting and trapping, and monitoring.
   - Service schedule. The pest control contractor shall describe the service schedule necessary for the control of pests at the site, including the number of service visits necessary, the duration of each service visit, the days of the week on which service visits will be made and the services to be performed during each visit. The pest control contractor shall adjust the service schedule as required to control pests at the site.
   - Structural and procedural changes and modifications. The pest control contractor shall make site-specific recommendations needed to control access to food, water or shelter by pests.
   - Applicator licenses. The pest control contractor shall provide copies of all required licenses and certifications for all applicators or technicians.

10. The pest control plan shall be submitted in accordance with the provisions set forth in the Special Project Conditions, General Provisions, and General Specifications.

11. Treated baits and poisons must be placed in locations not accessible to children, pets, wildlife or domestic animals, or shall be placed in tamper resistant bait boxes.

12. Structural and procedural recommendations by the pest control contractor shall be employed by The Contractor to the extent feasible. Additional control measures implemented by the Contractor or the pest control contractor to maintain a pest free site shall be at no additional cost to the Owner.

13. Wax block poison baits are the only form of bait to be used in sewers. The Onondaga County Department of Health will conduct its normal sewer baiting program within the project area from May to September. The pest control contractor shall not bait sewers during this time unless otherwise instructed.

14. Bait boxes and traps shall be placed out of general view in locations of pest activity but so as not to interfere with normal operations.

15. The pest control contractor shall not apply any pesticide that has not been included in the pest control plan.

16. Pesticides shall not be stored anywhere on the site. At the conclusion of pesticide application or baiting all surplus pesticide materials shall be removed from the site.

17. The pest control contractor shall comply with all posting and signage requirements based on all applicable Federal, State and Local laws and ordinances.

18. Trapping devices shall be checked in accordance with the pest control plan. The pest control contractor shall dispose of all trapped rodents and carcasses off site in an appropriate manner in accordance with all applicable laws and regulations.

19. The Engineer shall be advised of any special procedures or additional applications of pesticides necessary to control pests.

20. Safety and Health. The pest control contractor shall comply with all federal, state, and local laws, regulations and ordnances to protect employee safety and health. Pesticides and equipment shall be used and applied in strict accordance with manufacturer's printed instructions to prevent injury, illness or damage to non-target populations. Aerosol pesticides shall not be applied during times when wind speed or direction could cause drift of the pesticide onto non-target populations or off the project site.

    The pest control contractor shall supply all necessary personal protective equipment (PPE) and clothing for use by pesticide applicators. PPE shall include hard hats and safety glasses for personnel that must enter areas of the site requiring their use.

    The pest control contractor shall ensure that all personnel that are required to enter confined spaces have received training in the procedures necessary to safely enter and work in these spaces. Proof of confined space entry training shall be supplied to the Engineer upon request.

21. The pest control contractor shall be registered with the New York State Department of Environmental Conservation (NYSDEC) and pesticide applicators shall have completed all required training requirements and be licensed the NYSDEC. Copies of licenses shall be included with the pest control plan.

22. Recordkeeping and reporting. A copy of the pest control plan shall be kept at the project site in the Engineer's field office. Updates or revisions to the pest control plan shall be provided to the Engineer. Additional copies of MSDS, for pesticides in use at the site, shall be supplied to the Engineer.

    Field service reports detailing services performed, pesticide applications, pest sightings and complaints, structural and procedural recommendations, and sanitation recommendations shall be submitted to the Engineer within 2 days of a service visit. The field service report shall also contain the project name, the name of the pest control contractor's firm, the date of the service visit, the length of the service visit, and the signature of the licensed individual that conducted the service visit.

23. A monthly report summarizing all field service activities, pesticides, baits and equipment used and their estimated effectiveness, and a list of all complaints and pest sightings shall be prepared and submitted to the Engineer by the tenth day of the following month.

P-034. Owner's Right to Stop/Suspend Work and/or Terminate Contract.

In addition to the provisions of General Provisions Section G-7.01 - Owner's Right to Stop Work or Terminate Contract for Cause, and Section G-7.02 - Termination for Convenience, the Owner may also stop/suspend the Work or terminate the Contract for reasons such as, but not limited to, the following:

1. Issuance of an order of a court or other authority having jurisdiction which requires all work to be stopped; or

2. An act of government, such as declaration of emergency, which requires all work to be stopped.

In the event of any of the above, the Owner may provide written notice to the Contractor to stop/suspend work or terminate the contract, as appropriate. Upon receipt of such notice, the Contractor shall immediately cease progressing the Work with the exception of the following:

1. Work in progress that if stopped/suspended or terminated presents an imminent public safety or health hazard or impedes the continued provision of fire, police, or other public safety-service;

2. Work in progress that if stopped/suspended or terminated impedes or does not allow the continued provision of utilities related services including water, sewer, flood control, electric, natural gas, telephone, cable, fiber optic or other utility service;

3. Work in progress that if stopped/suspended or terminated, impedes the provision of, or does not allow access for transportation related to educational, community service, or other institutions; and/or,

4. Work in progress that if stopped/suspended or terminated presents an imminent threat to the environment, including local waters, soils, air, and wildlife.

5. Any other related work as may be directed by the Engineer.

Work in progress directly related to these concerns shall be immediately and continually progressed to the point of assurance that none of the above-described hazards or threats continue to exist, or until uninterrupted provision of noted services is fully assured.

Upon receipt of notice to stop/suspend Work or termination of Contract for reasons stated above, the Contractor shall complete the following:

1. Cease all operations and activities as directed by the Engineer in the notice (except as noted above);

2. Take all actions necessary, or as the Engineer may direct, for the protection and preservation of the completed portion of the Work as described below; and

3. In the case of termination, except for Work directed to be performed prior to the effective date of termination stated in the notice, terminate all existing subcontracts and purchase orders and enter into no further subcontracts and purchase orders related to the Contract.

In the event of such stop/suspension of Work or termination of Contract for the reasons stated above, the remaining Work and related matters will be governed by Sections 4, 5 and 6 of the General Provisions and any other applicable sections of the General Provisions. The Contractor shall be entitled to receive payment for Work executed as of the date of notice of suspension of the Work or termination of the Contract in accordance with Section 6 – Payments, of the General Provisions. In the event of Owner-directed stop/suspension of Work in whole or in part in accordance with this clause is resumed at the Owner's direction at subsequent date, upon resumption of Work, the Contractor may request adjustment of contract price and/or contract time for increases in the cost and time caused by such stop/suspension of Work. In this event, the Contractor shall provide appropriate documentation to the Owner for a proposed basis for adjustment of contract price or time per procedures and provisions of Section 5 – Changes, of the General Provisions.

At the time of stop/suspension of Work or notice of termination of Contract for the reasons stated above, it may be necessary for, or the Engineer may direct, the Contractor to complete unforeseen and additional work that is not part of the Work of the Contract for the Contractor to assure that none of the above-described safety, health, or environmental hazards or threats continue to exist and that uninterrupted provision of the above-noted utilities services continues. In addition, the Engineer may direct the Contractor to complete unforeseen and additional work to secure, protect, and preserve the Work completed up to the date of notice of stop/suspension of Work or termination of the Contract from damage or deterioration. Such direction by the Engineer shall in no way relieve the Contractor from his obligations to complete all required work in accordance with the Contract Documents or from any other contractual obligations. Such efforts may include, but are in no way limited to, the following:

- Secure and continually maintain the project site from unauthorized intrusion, vandalism, or public access.

- Maintain insurances and bonds as required by the Contract.

- Provide snow removal from the site as required to continue additional Work or as directed by the Owner

- Remove temporary facilities and services from the site.

- Establish or maintain selected temporary facilities and services at the site.
- Remove/demobilize materials and equipment from the site
- Provide transportation, handling, receipt, extended storage, protection, and maintenance of materials and equipment purchased specifically for the Work of the Contract.
- Provide temporary or permanent controls or fully stabilize disturbed site surfaces, waterways, and soils to control erosion of soils from the site and sedimentation onto adjacent properties or waterways.
- Provide for control of groundwater and surface waters that could damage the Work in progress.
- Provide for continued control and protection of trenches, excavations, and subsurface-related work (including protection of adjacent structures and facilities from damage) related to uncompleted Work.
- Maintain geotechnical or environmental monitoring facilities and continue to provide Contract-required geotechnical or environmental monitoring, as required.

It is also anticipated that, in the event of temporary suspension of Work, unforeseen and additional work may be required to return the site and Work to the conditions occurring when the Work was suspended as necessary to resume Work of the Contract.

P-035. Restoration of Existing Landscaping.

The Contractor shall make a written and photographic inventory of all turf areas, trees, shrubs, flower beds, mulched and stone landscaped areas and other non-vegetative landscape features (i.e., mailboxes, lawn ornaments, etc.) within the project site, both on public and private property prior to beginning construction. The inventory shall be submitted to the Engineer for approval.

The Contractor shall replace, restore and reestablish all existing landscaping which is removed or otherwise disturbed by the Contractor's activities with landscaping of the same type and size in accordance with the Contract Documents except landscape features indicated on the Contract Drawings as to be permanently removed. Existing trees larger than 3-inch diameter breast height (DBH) that are removed shall be replaced with trees of 3-inch DBH of the same species. The location of replacement vegetative landscaping shall be coordinated with the Engineer and property owner. Trees shall not be relocated directly above sewers, water mains, gas mains, or other utilities.

Existing chain link fencing and gates located within the limits of construction which must be removed to complete the work of the Contract shall be stored in a safe area and reinstalled during restoration. Existing fence and gate post holes shall be abandoned by filling with controlled low strength material and new fence and gate posts provided in accordance with the details on the Contract Drawings. Existing fencing and gates shall be connected to the new posts. If, in the opinion of the Engineer, the existing chain link fencing or gates are not suitable to be reinstalled, the Contractor shall provide and install new fencing or gates in accordance with the detail on the Contract Drawings. Existing chain link fencing or gates damaged as a result of the Contractor's negligence shall be replaced at no additional cost to the Owner.

P-036. Temporary Security Fencing.

This Special Project Condition supersedes General Specifications Section S-041 - Temporary Construction Fencing.

The Contractor shall install and maintain, as required, temporary security fencing, including construction access gates, to delineate construction areas from public usage areas for safety purposes. Temporary security fencing shall be installed at any and all locations where it is necessary to restrict public access to the work area, equipment and material storage areas, the Engineer's field office area, and any other potential hazards for safety reasons. Temporary security fence shall be in place, complete and secured, prior to construction activity in any and all work areas and shall be maintained throughout the duration of construction in work areas. The temporary fence shall be removed when construction activities in the work area are completed.

Refer to Technical Specifications Section 01500, Temporary Facilities and Controls and the Contract Drawings for additional requirements.

P-037. Overhead and Profit on Adjustments in Contract Price.

This Special Project Condition modifies General Provisions Section G-5.03 -Adjustments in Contract Price.

The calculation of overhead and profit as indicated in G-5.03(c) (7) shall not be negotiated. The provisions set forth in G-5.03(c) (7) (i), (ii) and (iii) shall apply to all adjustments in Contract price. Furthermore, only the Contractor's costs as described in G-5.03(c) (1) through (6) are eligible for inclusion in the costs upon which overhead and profit will be calculated. The Contractor may make no additional claims for overhead costs and/or profit due to the type, complexity or nature of work associated with the Change.

P-038. Concrete Bench Wall Work.

The Contractor's attention is called to the unique CSO conveyance flushing chambers and South Avenue Regulator Structure concrete bench wall placement, forming and shaping required for this project as detailed on the Contract Drawings. The Contractor is advised that the dimensional and geometric requirements detailed on the Contract Drawings will be strictly enforced by the Engineer.

P-039. Geotechnical Instrumentation and Pre-Construction Recording on Private Properties.

Prior to commencing the work required in Technical Specifications Sections 01323 – Color Audio-Video Preconstruction Records and 02015 - Geotechnical Instrumentation, the Owner will transmit a letter of introduction for each affected private property owner along the Project route by First Class Mail. This letter of introduction will provide a general description of the purpose and extent of the audio-video preconstruction taping and the geotechnical instrumentation to be installed and monitored on the property. This letter will offer these services to the private property owner. The private property owner may accept or decline the Contractor entrance to their property for the purpose of performing this work.

The Contractor shall make at least two attempts to contact each private property owner at least 14 calendar days prior to commencement of this work via certified, return receipt requested mail. The Contractor shall request that the private property owner provide written permission to enter the property on a form provided by the Contractor via pre-paid return mail.

If a private property owner does not respond to the Contractor's written requests to enter the property, the Owner shall consider the private property owner to have declined the Owner's offer and the Contractor will omit that property from the work required by Technical Specifications Sections 01323 – Color Audio-Video Pre-Construction Records and 02015 - Geotechnical Instrumentation except to the extent that the work can be performed from within the public right-of-way.

P-040. Relocation of Existing Utilities by Utility Owners.

Several existing utilities are shown on the Contract Drawings to be relocated by the utility owners. The Contractor shall be responsible for coordinating with the utility owners to have all existing facilities relocated prior to the Contractor's need to perform work in any given area.

The Contractor shall remove brush and/or debris as necessary to facilitate utility relocation activities within the Limits of Construction at the request of the utility owner.

The Contractor shall coordinate with utility owners regarding the relocation of all utilities in the project area.

The Contractor shall note that the following existing gas mains owned by National Grid shall not be taken out of service during National Grid's heating season (typically October 15 – April 15 and may be extended by National Grid due to customer demand) and the Contractor shall schedule his work accordingly.

- 6-inch diameter main at South Avenue/West Castle Street

The Contractor shall note that any references in the Contract Documents and Drawings to the relocation of utilities "by others" shall mean "by utility owners".

P-041. Provisions for Steel Price Adjustment.

If, during the time for performance of the contract, including approved time extensions, the price of steel **as measured by the index specified below** increases or decreases from the day of the Contract Award until the day of release for shipment from the supplier, up to and including ten percent the Contractor will be paid at bid prices. If, during the time of performance of the contract, including approved time extensions, the price of steel **as measured by the index specified below** increases by more than ten percent or decreases by more than ten percent from the month of the Contract Award until the month of release of shipment to the Contractor or fabricator, the payment to the Contractor will be adjusted (up or down) for the amount that exceeds 10 percent, and only for the portion that exceeds 10 percent in accordance with the provisions below. Notwithstanding any other provision in this contract, the County will not pay additional cost for escalation in steel prices during periods of delay resulting from the Contractor's fault or negligence.

1. Adjustments in payment will be made to the Contractor for fluctuations in the cost of steel/iron products for materials which will be permanently incorporated into the work, (i.e., sheeting left in place, pile and reinforcing steel).

2. Adjustments in payments will only be made for fluctuations in the material cost of the steel used in these items. No adjustment will be made for changes in the cost of manufacturing, fabrication, shipping, storage, etc.

3. Adjustments may be positive or negative, or non-existent depending on the circumstances. Increases or deductions for the steel cost adjustment will be calculated by the Engineer and shown on the Contractor's progress estimate under Payment Item 5.4.

4. Adjustments will not include (nor delete in case of cost decrease) Contractor's overhead and profit.

5. The steel cost adjustment (SCA) will be computed according to the following formula:

$$SCA = Q \times CB \times D$$

SCA = Steel Cost Adjustment, in dollars

Q = Quantity of manufactured steel shipped in Metric Tons

CB = Cost Basis defined in dollars per metric ton for the month of bid opening

D = [((MI-BI)/MI) -0.10], when the price increases from bid opening date to the invoice date

D = [((MI-BI)/MI) +0.10], when the price decreases from bid opening date to the invoice date

The Benchmark Steel Index (BI) and the Monthly Steel Index are defined as follows:

PPI = Producer Price Index (PPI) defined as the values published by the US Department of Labor, Bureau of Labor Statistics

MI = Monthly Steel Index defined as the value of the PPI for *Semi finished Steel Mill Products* (WPU 101702) for the month of bid letting

BI = Benchmark Steel Index defined as the value of the PPI for *Semi finished Steel Mill Products* (WPU 101702) for the month of material invoicing

6. No steel cost adjustment will be made for any products manufactured from steel having a shipping date to the contractor or fabricator prior to the date the work is awarded.

7. The Contractor shall furnish sufficient documentation to verify the following:

   a. The dates and amounts of steel shipped from the supplier to the contractor or fabricator, regardless of whether there is an increase or decrease in steel cost. The contractor will be required to demonstrate that orders for steel were made in accordance with the construction schedule, or that orders were placed to take advantage of lower prices.

   b. The amount of steel (by weight) incorporated into the various items of work covered by this special provision. The Engineer reserves the right to verify submitted quantities.

   c. Evidence that the adjustment in payment will be passed on to the appropriate subcontractors.

P-042. Provisions for Fuel Price Adjustment.

If, during the time for performance of the contract, the price of fuel as listed (in dollars/gallon) in the New York State Department of Transportation (NYSDOT) Engineering Bulletin entitled "Fuel, Asphalt and Steel Price Adjustments" increases by more than $0.15/gallon or decreases by more than $0.15/gallon from the month of the Contract Award until the month of Substantial Completion, the payment to the contractor will be adjusted (up or down) for the amount that exceeds $0.15/gallon, and only for the portion that exceeds $0.15/gallon in accordance with the provisions below.

1. Adjustments may be positive or negative, or non-existent depending on the circumstances. Increases or deductions for the fuel price adjustment will be calculated by the Owners Representative and shown on the Contractor's progress estimate as a contingency item.

2. Adjustments will not include (nor delete in case of cost decrease) Contractor's overhead and profit.

3. The fuel price adjustment (FPA) will be computed quarterly (i.e., every three months) according to the following formula:

   FPA = Q x D, where

   FPA = Fuel price adjustment, in dollars;

   Q = Quantity of fuel estimated by the Owner to be consumed for equipment use on the project site for the project duration (9 months), established as a fixed total project duration quantity by the Owner at 51,000 gallons. Accordingly, the quarterly (i.e., every three months) quantity that will be used for the FPA will be 17,000 gallons up to a project duration total of 51,000 gallons.

   D = Average Posted Fuel Price – Fuel Index Price - $0.15/gallon, when the price increases.

   D = Average Posted Fuel Price – Fuel Index Price + $0.15/gallon, when the price decreases.

   The Fuel Index Price and the Average Posted Fuel Price are defined as follows:

   a. Fuel Index Price: A fixed price per gallon of fuel in dollars/gallon used solely as a basis from which to compute fuel price adjustments. The fuel index price will be the monthly average posted price for the month of the Bid Opening, as listed in the NYSDOT Engineering Bulletin entitled "Fuel, Asphalt and Steel Price Adjustments"

   b. Average Posted Fuel Price: The quarterly (i.e., every three months) average of each month's average posted monthly price for fuel in dollars/gallon, as listed in the NYSDOT Engineering Bulletin entitled "Fuel, Asphalt and Steel Price Adjustments", for every three months following the month of the Bid Opening.

P-043. Verification of Existing Weir Elevations at Existing Regulator Structures.

The Contractor shall field verify the existing weir elevations at the following existing regulator structures and provide the elevation information to the Engineer with the shop drawing submittals for work related to the modifications to the existing combined sewer overflows (CSOs).

Existing Regulator Structure	Contract Drawing where Location is Shown
CSO 044 (South Avenue)	G-6

P-044. Temporary Parking Area at 807-809 South Avenue

The Contractor shall coordinate with the owner of 807-809 South Avenue, Syracuse, New York to provide a temporary parking area for residents of 805 South Avenue and 615-617 West Castle Street, including entering into a lease agreement with the owner of 807-809 South Avenue, complying with all terms of the lease agreement and providing monthly payments direct to the owner of 807-809 South Avenue in accordance with the lease agreement. The general conditions of the lease agreement are expected to include providing and maintaining a temporary parking area and temporary walkway as described in this section, insurance requirements as described in this section, and lease payments of $1,500.00 per month.

The Contractor shall include the owner of 807-809 South Avenue, Syracuse, New York as an additional insured on his insurance as described in Article 11 of the Agreement and Section P-010 of the Special Project Conditions and hold harmless, defend and indemnify said owner as described in Article 11, Section 11.07 of the Agreement and Section P-011 of the Special Project Conditions, for the duration of the lease agreement.

The Contractor shall provide and maintain a temporary parking area for the entire period for which residents of 805 South Avenue and/or 615-617 West Castle Street will be without vehicular access to their existing parking areas as a result of the Contractor's activities. The temporary parking area shall be accessed via the existing driveway at 807-809 South Avenue and shall be located on the eastern portion of the property. A smooth transition shall be provided from the existing driveway to the temporary parking area. The exact location and dimensions of the temporary parking area shall be as directed by the Engineer, but are expected to be approximately 60 ft. x 50 ft.

As part of this work, the Contractor shall also be responsible for providing and maintaining a temporary walkway from the temporary parking area to 615-617 West Castle Street. The temporary walkway shall be located along the western portion of the property located at 615-617 West Castle Street. The exact location and dimensions of the temporary walkway shall be as directed by the Engineer, but are expected to be approximately 4 ft. x 50 ft.

The Contractor shall remove existing brush and/or debris and grade the area to be used for the temporary driveway and temporary walkway. The existing wood fence sections at 807-809 South Avenue shall be removed by the Contractor as required to install the temporary parking area and temporary walkway.

The Contractor shall be responsible for snow and ice removal from the temporary parking area and temporary walkway.

The Contractor shall provide and maintain solar powered motion activated safety lighting (as manufactured by Regent-Cooper Lighting, model MSL180W, or approved equal) at an estimated four locations as determined by the Engineer.

Once vehicular access to the existing parking areas at 805 South Avenue and 615-617 West Castle Street is restored, the Contractor shall remove the temporary parking area and temporary walkway materials and restore all areas disturbed as a result of providing and maintaining the temporary parking area and temporary walkway including fine grading, installation of topsoil, seeding, and reinstallation of existing fencing.

P-045 Provisions for Asphalt Price Adjustment

If, during the time for performance of the contract, the price of asphalt as listed (in dollars/ton) in the New York State Department of Transportation (NYSDOT) Engineering Bulletin entitled "Fuel, Asphalt and Steel Price Adjustments" increases by more than $10.00/ton or decreases by more than $10.00/ton from the month of the Bid Opening until the month of the asphalt installation, payment to the Contractor will be adjusted (up or down) for the amount that exceeds $10.00/ton based upon the formulas listed below. Notwithstanding any other provision in this contract, the County will not pay additional cost for escalation in asphalt prices during periods of delay resulting from the Contractor's fault or negligence.

A. Adjustments in payment will be made to the Contractor for fluctuations in the cost of asphalt for materials which will be permanently incorporated into the work.

B. Adjustments in payments will only be made for fluctuations in the material cost of the asphalt installed. No adjustment will be made for changes in the cost of manufacturing, fabrication, shipping, storage, etc.

C. Adjustments may be positive or negative, or non-existent depending on the circumstances. Increase or deductions for the asphalt cost adjustment will be calculated by the Engineer and shown on the Contractor's progress estimate under Payment Item 5.6 – Asphalt Price Adjustment.

D. Adjustments will not include (nor delete in case of cost decrease) contractor's overhead and profit.

E. The asphalt price adjustment will be based solely on price changes for asphalt as determined by the formulas below. No consideration will be given to the situation where an individual supplier's price exceeds the monthly average posted, nor will any adjustment be made if the monthly average posted price is within $10.00 of the Performance Grade Binder (PGB) Index Price.

F. The asphalt price adjustment (APA) will be computed monthly according to the following formula:

APA = Q x D, where

APA = Asphalt price adjustment, in dollars;

Q = Quantity of asphalt installed on the project, in tons, multiplied by the conversion factors listed below.

D = (Average Posted Price) – (PGB Index Price) – ($10.00/ton), when the price increases.

D = (Average Posted Price) – (PGB Index Price) + ($10.00/ton), when the price decreases.

Material Description	Conversion Factor
NYSDOT Item 403.11M Type 1 Base Course	0.050
NYSDOT Item 403.13M Type 3 Binder Course	0.055
NYSDOT Item 403.19M Type 7F Top Course	0.067

The Asphalt Index Price and the Average Posted PGB are defined as follows:

1. PGB Index Price: a fixed price per ton of PGB used solely as a basis from which to compute asphalt price adjustments. The PGB index price will be the monthly average posted price for the month of the Bid Opening, as listed in the NYSDOT Engineering Bulletin entitled "Fuel, Asphalt and Steel Price Adjustments".

2. Average Posted Price: The average posted monthly price for PGB in dollars/ton, as listed in the NYSDOT Engineering Bulletin entitled "Fuel, Asphalt and Steel Price Adjustments", for the month the material is installed.

G. The Contractor shall furnish sufficient documentation to verify the following:

1. The dates and amounts of asphalt shipped from the supplier to the site to be verified by delivery tickets submitted to the Engineer at the time of installation. No adjustment will be made if the Contractor does not submit the delivery ticket to the Engineer's on-site representative at the time of installation.

2. The amount of asphalt (by weight) incorporated into the various items of work covered by this special provision. The Engineer reserves the right to verify submitted quantities.

3. Evidence that the adjustment in payment will be passed on to the appropriate subcontractors.

P-046 ARRA Funding Requirements

This project is funded in part by the American Recovery and Reinvestment Act (ARRA). As such, all contractors shall be responsible for compliance requirements associated with these funds.

The Contractor is directed to Information for Bidders Sections 3.04 and 6.06 for ARRA funding requirements related to M/W/DBE participation and Davis-Bacon Act requirements, respectively.

Further, the Contractor shall note that all iron, steel and manufactured goods for the project must be in compliance with the "Buy American Requirements" of ARRA (i.e., Section 1605) which require all iron, steel and manufactured goods used in the project to be produced in the United States. Buy American Requirements do not apply to sub-components of a domestically manufactured good, raw materials such as stone or concrete mix, or machinery used but not incorporated into construction. Also exempt are materials used during construction but not permanently incorporated into the project, such as extracted steel sheeting. The Contractor shall be responsible for obtaining all Buy American certifications from all vendors and suppliers for any project iron, steel and manufactured goods at the request of the Engineer.

Additionally, the Contractor shall post the "ARRA Whistleblower Poster" and the "Davis-Bacon Poster" at the project site in a location visible to all Contractor employees at all times. Refer to Appendix A of the Special Project Conditions for the posters.

P-047 Construction Equipment and Vehicles

If construction equipment or vehicles are not part of an active construction activity, they shall not be left to idle.

Additionally, construction vehicles and traffic (including vehicles providing delivery of materials) shall travel only on City of Syracuse Designated Truck Routes. The truck routes include the following streets:

7th North Street
Adams Street
Ainsley Drive
Bear Street
Bellevue Avenue
Brighton Avenue
Burnet Avenue
Burt Street
Butternut Street
Castle Street
Comstock Avenue
East Colvin Street
East Genesee Street
Erie Boulevard
Euclid Avenue
Fayette Street
Geddes Street
Glenwood Avenue
Grand Avenue
Grant Boulevard
Harrison Street
Herald Place
Hiawatha Boulevard
Irving Avenue
James Street
Jefferson Street
Kirkpatrick Street
Lodi Street
Midland Avenue
Midler Avenue
North State Street
Oak Street
Salina Street
Seymour Avenue
Shonnard Street
South Avenue
South Clinton Street
Teall Avenue
Thompson Road
Townsend Street
University Avenue
Velasko Road
West Genesee Street
West Seneca Turnpike
West Street
Wolf Street

APPENDIX A

ARRA Posters

Know Your Rights
Under the Recovery Act!

Did you know?

The American Recovery and Reinvestment Act of 2009 [1] provides protections for certain employees of non-federal employers who make specified disclosures relating to possible fraud, waste and/or abuse or Recovery Act funds.

Who is protected?

Employees of non-federal employers receiving recovery funds. This includes State and local governments, contractors, subcontractors, grantees or professional membership organizations acting in the interest of recovery fund recipients.

How are Whistleblowers Protected?

You cannot be discharged, demoted or otherwise discriminated against as a reprisal for making a protected disclosure.

What types of disclosures are protected?

The disclosure must be made by the employee to the Recovery Accountability and Transparency Board, an Inspector General, the Comptroller General, a member of Congress, a state or federal regulatory or law enforcement agency, a person with supervisory authority over the employee, a court or grand jury, or the head of a federal agency or his/her representatives.

The disclosure must involve information that the employee believes is evidence of:

- gross mismanagement of an agency contract or grant relating to recovery funds;
- a gross waste of recovery funds;
- a substantial and specific danger to public health or safety related to the implementation or use of recovery funds;
- an abuse of authority related to the implementation or use of recovery funds; or
- a violation of law, rule, or regulation related to an agency contract or grant awarded or issued relating to recovery funds.

Take Action!

Log on to Recovery.gov for more information about your rights and details on how to report at www.recovery.gov.

---

[1] Section 1553 of Division A, Title XV of the American Recovery and Reinvestment Act of 2009, P.L. 111-5

EMPLOYEE RIGHTS
UNDER THE DAVIS-BACON ACT

FOR LABORERS AND MECHANICS EMPLOYED ON FEDERAL OR FEDERALLY ASSISTED CONSTRUCTION PROJECTS

THE UNITED STATES DEPARTMENT OF LABOR WAGE AND HOUR DIVISION

PREVAILING WAGES	You must be paid not less than the wage rate listed in the Davis-Bacon Wage Decision posted with this Notice for the work you perform.
OVERTIME	You must be paid not less than one and one-half times your basic rate of pay for all hours worked over 40 in a work week. There are few exceptions.
ENFORCEMENT	Contract payments can be withheld to ensure workers receive wages and overtime pay due, and liquidated damages may apply if overtime pay requirements are not met. Davis-Bacon contract clauses allow contract termination and debarment of contractors from future federal contracts for up to three years. A contractor who falsifies certified payroll records or induces wage kickbacks may be subject to civil or criminal prosecution, fines and/or imprisonment.
APPRENTICES	Apprentice rates apply only to apprentices properly registered under approved Federal or State apprenticeship programs.
PROPER PAY	If you do not receive proper pay, or require further information on the applicable wages, contact the Contracting Officer listed below:

or contact the U.S. Department of Labor's Wage and Hour Division.

For additional information:

1-866-4-USWAGE

(1-866-487-9243) TTY: 1-877-889-5627

WWW.WAGEHOUR.DOL.GOV

U.S. Department of Labor | Employment Standards Administration | Wage and Hour Division

WH 1321(Revised April 2009)

DERECHOS DEL EMPLEADO
BAJO LA LEY DAVIS-BACON
PARA OBREROS Y MECÁNICOS EMPLEADOS EN PROYECTOS DE CONSTRUCCIÓN FEDERAL O CON ASISTENCIA FEDERAL

LA SECCIÓN DE HORAS Y SUELDOS DEL DEPARTAMENTO DE TRABAJO DE EEUU

SALARIOS PREVALECIENTES No se le puede pagar menos de la tasa de pago indicada en la Decisión de Salarios Davis-Bacon fijada con este Aviso para el trabajo que Ud. desempeña.

SOBRETIEMPO Se le ha de pagar no menos de tiempo y medio de su tasa básica de pago por todas las horas trabajadas en exceso de 40 en una semana laboral. Existen pocas excepciones.

CUMPLIMIENTO Se pueden retener pagos por contratos para asegurarse que los obreros reciban los salarios y el pago de sobretiempo debidos, y se podría aplicar daños y perjuicios si no se cumple con las exigencias del pago de sobretiempo. Las cláusulas contractuales de Davis-Bacon permiten la terminación y exclusión de contratistas para efectuar futuros contratos federales hasta tres años. El contratista que falsifique los registros certificados de las nóminas de pago o induzca devoluciones de salarios puede ser sujeto a procesamiento civil o criminal, multas y/o encarcelamiento.

APRENDICES Las tasas de aprendices sólo se aplican a aprendices correctamente inscritos bajo programas federales o estatales aprobados.

PAGO APROPIADO Si Ud. no recibe el pago apropiado, o precisa de información adicional sobre los salarios aplicables, póngase en contacto con el Contratista Oficial que aparece abajo:

o póngase en contacto con la Sección de Horas y Sueldos del Departamento de Trabajo de EEUU.

Para obtener información adicional:

1-866-4-USWAGE

(1-866-487-9243) TTY: 1-877-889-5627

WWW.WAGEHOUR.DOL.GOV

U.S. Department of Labor | Employment Standards Administration | Wage and Hour Division

WH 1321 SPA (Revised April 1998)

GENERAL PROVISIONS

SECTION 1 – CONTRACTOR'S OBLIGATIONS

G-1.01. Contractor's Work.

The Contractor shall furnish all labor, materials, installed equipment, tools, scaffolding, shoring, bracing, appliances and equipment necessary to properly and safely complete the work under the Contract, and within the time specified. He shall also provide all necessary machinery and plant for the proper and safe execution of the work under this Contract, and shall cover and protect the work from damage due to any cause whatsoever.

The Contractor alone shall be responsible for the safety, efficiency and adequacy of his plant, appliances and methods, for the performance of the work and for the supervision and performance of his personnel, subcontractors and vendors.

G-1.02. Representations of Contractor.

The Contractor represents and warrants:

A. That he is financially solvent and that he is experienced in and competent to perform the type of work or to furnish the plant, materials, supplies or equipment, to be so performed or furnished by him; and

B. That he is familiar with all Federal, State, County and Municipal Laws, ordinances and regulations, which may in any way affect the work or those employed therein, including, but not limited to, any special acts relating to the work or to the project of which it is a part; and

C. That such temporary and permanent work required by the Contract Documents as is to be done by him can be satisfactorily constructed and used for the purpose for which it is intended, and that such construction will not injure any person or damage any property; and

D. That he has carefully examined the Contract Documents and the site of the work, and that, from his own investigations, he has satisfied himself as to the nature and location of the work, the character, quality and quantity of surface and sub-surface materials and structures likely to be encountered, the character of equipment and other facilities needed for the performance of the work, the general and local conditions, and all other materials which may in any way affect the work or its performance.

G-1.03. Permits, Laws and Regulations.

Except as otherwise noted in the Special Project Conditions, the Contractor shall take out, at his own expense, all necessary permits from the County, State, Town, municipal or other public authorities; shall give all notices required by the laws or municipal ordinances and shall pay all fees and charges incidental to the due and lawful execution of the work done under this Contract. He shall keep himself fully informed of all laws, municipal ordinances, and regulations in any manner affecting those engaged or employed in the work, or the materials used in the work, or in any way affecting the conduct of the work, and of all orders, decrees and instructions of bodies or tribunals having any jurisdiction or authority over the same. If any discrepancy or inconsistency should be discovered in the Contract Documents in relation to any such permits, laws,

GENERAL PROVISIONS

SECTION 1 – CONTRACTOR'S OBLIGATIONS

ordinances, regulations, orders, decrees, or instructions, he shall forthwith report the same in writing to the Owner's Representative.

The Contractor shall at all times observe and comply with and shall cause all his agents and employees to observe and comply with all such existing and future laws, ordinances, regulations, orders, decrees and instructions and the conditions of all permits.

G-1.04. Contractor's Address.

Unless the Contractor notifies the Owner in writing to the contrary, the Contractor's address given in the Bid shall be the address to which official communications concerning the Contract shall be mailed or delivered. In addition, official communications may be personally delivered to the Contractor's on-site representative and such personally delivered communications shall have the same force and effect as those mailed or delivered to the Contractor's address.

G-1.05. Emergency Calls.

The Contractor shall maintain telephone service twenty-four (24) hours a day, seven (7) days a week to responsible personnel who shall be in a position to dispatch personnel and machinery to any point on the work site in the event of an emergency and to clear conditions creating any hazard to life, limb or property.

The telephone number shall be supplied to the Owner's Representative not less than five (5) days prior to the commencement of work.

G-1.06. Contractor's Agents, Superintendents and Foreman.

The Contractor shall at all times have a competent superintendent, foreman, or other representative on the work, who shall have full authority to act for the Contractor and to receive and execute orders from the Owner's Representative, and who shall receive shipments of material to the Contractor and who shall see that the work under the Contract is executed in accordance with the Contract Documents and the instructions of the Owner's Representatives thereunder. The Contractor shall be responsible for the acts of his agents, superintendents, and employees during the life of the Contract. The Contractor's authorized agent, superintendent or foreman shall not be replaced without prior written notification to the Owner, except under extraordinary circumstances.

Neither the Owner, the Owner's Representative or the Engineer will be responsible for the acts or omissions of the Contractor, or subcontractors, or any of his or their superintendents, supervisory staff, agents or employees.

G-1.07. Contractor's Personnel.

The Contractor shall be solely responsible for the supervision, conduct and safety of his personnel.

The Contractor shall be solely responsible for ensuring that his personnel and his subcontractors' personnel are properly trained, equipped and certified if applicable, to perform the work and operate the required tools and equipment.

GENERAL PROVISIONS

SECTION 1 – CONTRACTOR'S OBLIGATIONS

The Contractor shall restrict his personnel to only those areas of the facility necessary for the performance of the work of this contract. The Contractor shall instruct his personnel to observe extreme caution when working in the vicinity of mechanical equipment and open tankage. Personnel should be advised that equipment may start automatically and without warning or may be started from a remote location. The Contractor shall instruct his personnel on the hazards and precautions associated with sewage, sludges and chemicals, which may be present in the facility. Personnel should be cautioned that surfaces may be wet or slippery and that physical, chemical, electrical and biological hazards are present. The Contractor's personnel shall not operate or tamper with any valve or switches or other devices or equipment. The Contractor shall be solely responsible for any damage or disruption caused by his personnel.

G-1.08. Safety and Accident Prevention.

The Contractor shall be responsible for complying with the requirements of all applicable Federal and State Occupational Safety and Health Act provisions and the requirements of any and all other laws, rules and regulations pertaining to employee health, safety and accident prevention.

The Contractor shall be solely responsible and liable for the safety and protection of all property and persons, both on the site of the work and adjacent thereto. The Contractor shall designate a qualified and experienced safety representative at the site whose duties and responsibilities shall be the prevention of accidents and the maintaining and supervising of safety precautions and programs.

In all projects advertised for bid on or after July 18, 2008, if the total cost of the Work under this contract is at least TWO HUNDRED FIFTY THOUSAND DOLLARS ($250,000.00), the Contractor shall be responsible for ensuring that his personnel and his subcontractor's personnel, including all laborers, workers and mechanics or other persons doing or contracting to do the whole or any part of the Work, shall be certified prior to performing any Work on the Project as having successfully completed a course in construction safety and health approved by the United States Department of Labor's Occupational Safety and Health Administration that is at least ten (10) hours in duration.

If the work of this Contract requires entry into or activities within areas which are considered to be "confined spaces" or which may otherwise contain hazardous atmospheres, the Contractor shall be responsible for providing all necessary personnel instructions, monitoring and safety equipment, as required by all applicable codes and regulations. Such areas include, but are not limited to, any space containing sewage, sludge, chemicals, fuels or combustibles, poor ventilation or limited access.

If the work of the Contract involves excavation, the Contractor shall designate, and identify to the Owner's Representative, a "competent person" as defined in applicable OSHA Regulations concerning excavation and trench protection and safety. The Contractor's designated competent person shall be present at the site at all times during the performance of excavations and shall be solely responsible for the conduct of safe excavation in accordance with applicable OSHA Regulations.

Any accident involving personal injury requiring more than simple, on-site first aid or property damaged in excess of $100 shall be reported by the Contractor's on-site representative to the Owner's Representative within 24 hours of occurrence, complete with all pertinent details.

GENERAL PROVISIONS

SECTION 1 – CONTRACTOR'S OBLIGATIONS

Neither the Owner, the Owner's Representative, the Owner's Engineer or other consultants, agents or employees of the Owner shall have any duty, obligation or responsibility for supervising, directing, inspecting, monitoring, overseeing, enforcing or otherwise ensuring the Contractor's compliance with and performance of safety requirements or procedures. If the Owner's Representative happens to observe or become aware of a failure to comply with safety requirements or procedures by the Contractor, its employees or subcontractors, the Owner's Representative may, at his discretion, so notify the Contractor's on-site representative. If, in the judgement of the Owner's Representative, the observed failure to comply constitutes an immediate threat to persons or property, or prevents the Owner's Representative from safely gaining access to the work or otherwise performing his duties, the Owner's Representative may order the work stopped until the problem is rectified, and the Contractor, or subcontractor, shall immediately comply with such order. The Contractor shall have no claim for delay or damages against the Owner, nor shall the Contractor be entitled to an extension of contract time due to any work stoppage arising from the Contractor's failure to comply with safety requirements or procedures.

G-1.09. Hazardous Communication Standard Compliance.

If applicable to the work of this Contract, pursuant to the requirements of the Hazardous Communication Standard, 29 CFR 1910.1200, prior to commencing the work of the Contract, the Owner's Representative will provide the Contractor with information concerning the County's Hazardous Communication Program, a list of hazardous substances known to be present in the work area, including suggested safety precautions that should be followed, an explanation of the Connty's hazardous labeling procedure and information on the availability of Material Safety Data Sheets. The Owner's Representative may also conduct the Contractor's Representative on a walk-through of the work area to identify specific hazards which may be present. The Contractor will be required to sign a statement acknowledging receipt of this information. The Contractor's employees will not be permitted to enter the site until this statement is signed.

The Contractor shall be responsible for informing and instructing his employees and subcontractors as to the County's Hazardous Communication Program and procedures and the existence of hazardous materials or conditions in the work area. The Contractor shall be responsible for providing his employees and subcontractors with all information and training required under, and otherwise complying with, OSHA's Hazardous Communication Standard, 29 CFR 1910.1200 and New York State's Toxic Substance Act, Labor Law Article 28.

The Contractor shall inform the Owner's Representative of any and all hazardous materials which the Contractor may cause to be present at the site and shall provide to the Owner's Representative Material Safety Data Sheets for any and all such materials at least 72 hours prior to the introduction of any such materials to the site.

The Contractor shall designate a qualified and experienced safety representative at the site whose duties and responsibilities shall be the prevention of accidents and the maintaining and supervising of safety precautions and programs.

The Contractor must submit a detailed work plan, including a sequence of operation (and/or installation), and detailed procedures for all work to be performed in hazardous areas, including but not limited to, work involving gas systems. The Contractor must submit this plan for approval by the County and Engineer within two weeks of the proposed start of work. The Contractor cannot proceed with work in hazardous areas

GENERAL PROVISIONS

SECTION 1 – CONTRACTOR'S OBLIGATIONS

without an approved work plan. Installation, purging if applicable, and testing, shall be in accordance with the requirements of the National Fire Protection Association (NFPA) standards.

G-1.10. Patents.

The Contractor shall pay all license fees and royalties and assume all costs incident to the use in the performance of the work or the incorporation in the work of any invention, design, process, product or device which is the subject of patent rights or copyrights held by others. If a particular invention, design, process, product or device is specified in the Contract Documents for use in the performance of the work and if to the actual knowledge of the Owner or the Engineer its use is subject to patent rights or copyrights calling for the payment of any license fee or royalty to others, the existence of such rights shall be disclosed by the Owner in the Contract Documents. The Contractor shall indemnify, defend, keep and save harmless the Owner from all claims, liabilities, judgments, costs, damages and expenses which may in any way be asserted or imposed against the Owner by reason of the use of any patented material, machinery, devices, equipment or processes furnished or used in the performance of the work under the Contract or by reason of the use of patented designs furnished by the Contractor and accepted by the Owner.

G-1.11. No Claims Against Individuals.

No claim whatsoever shall be made by the Contractor against any officer, agent or employee of the Owner for, or on account of anything done or omitted to be done in connection with the Contract.

G-1.12. Contractor's Title to Material.

The Contractor warrants that he has good title, free and clear, to all materials, supplies and equipment used by him in the work.

All materials and equipment incorporated in the work shall become the property of the Owner.

G-1.13. One-Year Guarantee.

All work of this Contract shall be guaranteed by the Contractor for a period of one (1) year.

For work taken under beneficial occupancy prior to issuance of a Certificate of Substantial Completion, the one-year guarantee period shall commence on the date of beneficial occupancy of that work, unless noted otherwise on the Notice of Beneficial Occupancy.

Otherwise, the one-year guarantee period shall commence with the date of Substantial Completion, as determined by the Owner, for all work accepted as substantially complete. Items of work which are uncompleted as of the date of Substantial Completion, or which subsequently become defective, shall be guaranteed for one (1) year from the date of their respective completion or correction.

Under this guarantee the Contractor agrees to promptly repair, replace or otherwise make good to the Owner's satisfaction, and at the Contractor's expense, any and all items of work of the contract which fail to perform in accordance with the Contract Documents, and also to make good any damage caused by such failure.

GENERAL PROVISIONS

SECTION 1 – CONTRACTOR'S OBLIGATIONS

This guarantee is a part of the Contractor's obligations under this Contract and, as such, shall be covered by the Contractor's Performance Bond.

G-1.14. Underground Utilities.

The information and data shown or indicated in the Contract Documents with respect to existing underground utilities at or contiguous to the site is based on information and data furnished to the Owner by the owners of such underground utilities, or by others. The Owner shall not be responsible for the accuracy or completeness of any such information or data.

The cost of all of the following will be included in the Contract Price, and the Contractor shall have full responsibility for: (i) reviewing and checking all such information and data shown or indicated in the Contract Documents, (ii) locating all underground utilities shown or indicated in the Contract Documents, (iii) coordination of the work with the owners of such underground utilities during construction, and (iv) the safety and protection of all such underground utilities and repairing any damage thereto resulting from the work."

GENERAL PROVISIONS

SECTION 2 – ASSIGNMENT AND SUBCONTRACTS

G-2.01. Assignment.

The Contractor shall not assign, transfer, convey, or otherwise dispose of this Contract, or of his right, title or interest therein, or his power to execute such Contract, to any other person or corporation without the previous consent in writing of the Owner.

The provisions of this Section shall not hinder, prevent, or affect an assignment by the Contractor for the benefit of creditors made pursuant to law, nor is it intended to prohibit subcontracting a portion of the work of the Contract in accordance with the provisions of the law.

G-2.02. Subcontracts.

In the event that the Contractor desires to subcontract any part of the work, he shall first submit to the Owner a statement showing the character and amount of the work to be subcontracted and the party or parties to whom it is proposed to subcontract the same. If requested by the Owner, he shall also furnish a statement as to his or their experience, financial ability, or other qualifications for properly performing the work proposed to be subcontracted.

The proposed subcontractor shall not perform any work nor enter upon the site of the work until written approval has been granted by the Owner and acceptable Certificates of Insurance for the subcontractor have been submitted to the Owner.

Notwithstanding the Contractor's use of subcontractors, and the Owner's approval thereof, the Contractor shall be solely responsible for the satisfactory and entire completion of the work of the Contract in accordance with these Contract Documents and for the performance and conduct of his subcontractors. Any work performed by subcontractors which is determined by the Owner to be unacceptable shall be corrected or replaced at no additional cost to the Owner. In the event a subcontractor consistently fails or refuses to perform in accordance with the Contract Documents, the Owner may require the Contractor to remove that subcontractor from the site and to complete the work by other acceptable means, at no additional cost to the Owner.

The Contractor shall be responsible for the coordination of all subcontractors engaged upon his work.

G-2.03. Subcontractor's Wage Rates.

In accordance with Article 8 - Section 220 of the New York State Labor Law, the New York State schedule of prevailing wages and supplements, as included in this Contract or as subsequently redetermined by the New York State Department of Labor, shall be specifically included in each and every subcontract, regardless of tier, awarded by the Contractor or his subcontractors.

Subcontractors, regardless of tier, shall provide to the Contractor a verified statement attesting that the subcontractor has received and reviewed the prevailing wage rate and supplement schedule and agreeing that it will pay its employees the applicable wages and will pay or provide the supplements specified therein. The Contractor shall submit to the Owner copies of all such verified statements.

GENERAL PROVISIONS

SECTION 2 – ASSIGNMENT AND SUBCONTRACTS

The Owner will not reduce retainage or make final payment to the Contractor unless and until the Contractor has submitted to the Owner the verified statements concerning wage rates from each and every subcontractor, regardless of tier, utilized in the performance of the work of this Contract.

In the event it is determined by the New York State Commissioner of Labor that the wages and/or supplements of any employees of the Contractor's subcontractors, regardless of tier, have not been paid as provided pursuant to the appropriate schedule of wages and supplements, the Contractor shall be responsible for payment of such wages or supplements.

GENERAL PROVISIONS

SECTION 3 – OWNER'S REPRESENTATIVES

G-3.01. Owner.

The term "Owner", as used in these Contract Documents, shall refer to the County of Onondaga, New York. The Agreement can be executed on behalf of the Owner only by the Onondaga County Executive. Similarly, changes to the Contract Documents subsequent to Contract execution can only be accomplished pursuant to a Change Order signed by the County Executive, in accordance with Section 5 of these General Provisions.

This Contract shall be administered on behalf of the Owner by the Onondaga County Department of Water Environment Protection, whose designated employees shall have the authority to act on behalf of the Owner and represent the Owner on all matters concerning this Contract, except changes thereto, as noted above.

G-3.02. Engineer.

The Materials and Performance (Technical) Specifications and Contract Drawings portions of these Contract Documents have been prepared by a consulting engineer or architect retained by the Owner under a separate contract. The name of the consulting engineer or architect will be shown on the cover of the Contract book and on each sheet of the Contract Drawings. Furthermore, the name, address and telephone number of the Owner's consulting engineer or architect, if any, will be indicated in the Special Project Conditions.

The term "Engineer," as used in these Contract Documents, is defined in the Definition of Terms.

G-3.03. Owner's Representative.

Routine communication between the Owner and the Contractor shall be through the Owner's Representative. The Owner's Representative may be either an employee of the Owner or an employee of the Engineer or the Construction Project Manager, as designated in the Special Project Conditions. The designation of the Owner's Representative may be changed at any time by the Owner. Such a change in the designation of the Owner's Representative shall not be construed to be a change to the Contract Documents and shall not affect the validity or enforceability of the Contract Documents.

The Owner's Representative is not authorized to make changes in the Contract Documents, to direct or authorize the performance of extra work or to otherwise modify the Contract. Such changes can only be effected by a Change Order issued pursuant to Section 5 of these General Provisions.

G-3.04. Inspection of the Work.

Inspection of the work of this Contract will be performed by the Owner's Representative. The Owner's Representative is empowered by the Owner to determine the amount, quality, acceptability and fitness of all parts of the work, and to interpret the Contract Documents and any changes thereto, but this authority shall not give rise to any duty or responsibility of the Owner, the Owner's Representative or the Engineer to the Contractor, subcontractors or any of their agents or employees.

GENERAL PROVISIONS

SECTION 3 – OWNER'S REPRESENTATIVES

Inspection services performed by the Owner pursuant to this Contract, whether of material or work, and whether performed prior to, during or after completion of construction, are performed solely for the purpose of determining general conformity of the work with the Contract Documents.

No matter how extensive the Owner's inspection services, neither the Owner, the Owner's Representative or Engineer will be responsible for the Contractor's failure to furnish materials or equipment or to perform the work of the Contract in accordance with the Contract Documents.

Nothing contained herein shall create, or be deemed to create: (1) any duty upon the Owner, the Owner's Representative, or the Engineer, to supervise or be responsible for construction means and methods, techniques, sequences or procedures or for safety precautions and programs followed or required to be followed by any Contractor or subcontractor or their employees or by any other persons at the job site; (2) any liability whatsoever by the Owner, the Owner's Representative or the Engineer to any employees or any contractor or subcontractor or to any other person; or (3) an acceptance of any of the work, except as provided for in Subsection G-6.07 (C).

G-3.05. No Waiver of Rights; No Estoppel

Neither the inspection by the Owner, nor any of its employees, agents or Owner's Representative, Engineer or Construction Project Manager nor any order of the Owner for payment of money, nor any order, measurement or certificate by the Owner, nor payment for, nor acceptance of the whole or any part of the work by the Owner, nor any extension of time, nor any possession taken by the Owner or employees shall operate as a waiver of any provision of this Contract, or of any power herein reserved to the Owner or of any right to damages herein provided, nor shall any of such actions preclude or estop Owner, any of its employees, agents, Owner's Representative, Engineer, or Construction Project Manager from exercising any rights or powers under the Contract Documents or from asserting any right, claim or remedy in connection with any other or subsequent breach. No waiver of any breach of this Contract shall be held to be a waiver of any past, present or subsequent breach. Neither the issuance of a Certificate of Substantial Completion, nor correction by the Owner of Contractor's defective work will constitute an acceptance of any work that is not in accordance with the Contract Documents, or a release of Contractor's obligation to perform the work in accordance with the Contract Documents. All remedies in this Contract shall be taken and construed as cumulative; that is, in addition to each and every other remedy herein provided, the Owner shall have any and all equitable and legal remedies which he would in any case have.

GENERAL PROVISIONS

SECTION 4 – TIME PROVISIONS

G-4.01. Commencement and Completion of Work.

The Contractor shall commence the work within the time specified in the Information for Bidders. Time being of the essence to the County, the Contractor shall thereafter prosecute the work diligently as will assure its completion and shall fully complete the work within the time specified in the Special Project Conditions and Contract Documents

G-4.02. Pre-construction Meeting.

Prior to the start of construction by the successful Bidder, a general information meeting shall be held with the Owner, Owner's Representative, Contractor, and any other interested parties designated by the Owner at a time and place to be designated by the Owner. The meeting shall cover general features of the Project and coordination of commencement of the work.

G-4.03. Progress and Coordination Meetings.

Periodically during the course of the Contract work the Owner's Representative may schedule progress and coordination meetings. The purpose of these meetings is to review the status of the work, update the Project Schedule, Coordinate the activities of the various parties and address questions and issues which may arise. Attendance at these meetings is a part of the work of this Contract and is mandatory. The Contractor shall be represented at these meetings by his designated Project Manager or Project Superintendent. Minutes of these meetings will be prepared by the Owner's Representative and distributed to all parties. These minutes shall become part of the official project documentation.

G-4.04. Rate of Progress.

The rate of progress shall be as nearly uniform as practicable and shall be such that all work under the Contract will be completed within the time specified, or before such later date to which the time of completion may have been extended by the Owner, pursuant to General Provisions Section 5.

To enable the work to be performed in an orderly and expeditious manner, the Contractor shall, within ten days following the execution of this contract, prepare and submit to the Owner, the Owner's Representative and Engineer, for review, two copies of a practical and feasible work schedule. The schedule shall be in the form of a neat and legible bar graph and shall show the proposed starting dates and duration of all major components, tasks or activities included in the Contract. The schedule shall also indicate shop drawing submittal, delivery and installation dates for major or critical items of equipment or materials. If more than one prime contract is involved, the General Contractor's schedule shall take into account the work of the other Contractors and the other Contractors shall provide input to the General Contractor's schedule and shall review the compiled schedule for acceptance. After all prime contractors have reviewed and accepted the schedule prepared by the General Contractor, that schedule shall be submitted for approval to the Owner and Owner's Representative, along with proposed monthly cash flow requirements showing:.

a. The anticipated time of commencement and completion of each of the various operations to be performed under this Contract; and

GENERAL PROVISIONS

SECTION 4 – TIME PROVISIONS

b. Indicate shop drawing submittal and delivery and installation dates for the various items of equipment or materials.

c. The sequence and interrelation of each of these operations with the others and with those of other related Contracts; and

d. The estimated time required for fabrication or delivery, or both, of all materials and equipment required for the Work; and

e. The estimated amount in dollars the Contractor will claim on a monthly basis.

The proposed schedule shall be revised as directed by the Owner's Representative until finally approved by the Owner's Representative and after such approval shall be strictly adhered to by the Contractor. The Contractor will not receive any payments until the proposed progress schedule is submitted and approved.

If the Contractor shall fail to adhere to the approved progress schedule, or to the schedule as revised pursuant to Section 5, it shall promptly adopt such other or additional Means and Methods of Construction as will make up for the time lost and will assure completion in accordance with the approved progress schedule. Such other or additional means and methods of construction shall be without further cost to the Owner. The approval by the Owner of a progress schedule which is shorter than the time allotted under the Contract shall not create any liability for the Owner if the approved progress schedule is not met.

The General Contractor is required to update the Project Schedule on a monthly basis.

The Contractor on each Contract shall adhere to the approved Project Schedule or any mutually acceptable changes thereto. In the event a Contractor does not adhere to the Project Schedule and causes other Contractors to be damaged, the Contractor causing the delay shall save the Owner harmless from all actions and charges of the other Contractors against the Owner caused by said delay.

G-4.05. Charges for Delay.

It is hereby agreed that time is of the essence of the Contract and that the Owner will suffer damages from failure to complete the work in the time specified. When the work embraced in the Contract is not completed on or before the date specified for completion in the Contract Documents or on or before the later date to which the time of completion may have been extended by the Owner, the engineering, construction management and inspection expenses incurred by the Owner, upon the work from said date to the final date of completion of the work shall be charged to the Contractor and in addition, the Contractor shall be charged the sum of One Thousand Dollars ($1,000.00) per diem for the same period, said sums being not in the nature of a penalty, but a part of the consideration of the Contract as Liquidated Damages. The work will be deemed completed on the date of substantial completion in accordance with Section G-6.07 of the General Provisions. These charges and liquidated damages are in addition to Section I-6.03 and P-006 and all other remedies, charges and damages under the Contract Documents in the event of delay or breach by the Contractor.

The amounts of engineering and inspection expenses and Liquidated Damages and other charges and damages pursuant to I-6.03 and P-006 shall be deducted from any monies due or to become due the Contractor.

GENERAL PROVISIONS

SECTION 4 – TIME PROVISIONS

G-4.06. Extension of Time.

See General Provisions Section 5 for procedures concerning Extension of Time.

G-4.07 No Damage for Delay.

The Contractor shall not be entitled to make a claim and shall not make a claim for damages for delay in the performance of this Agreement occasioned by any act or omission to act of the Owner, any Owner Representative or Owner's Engineer, and agrees that any such claim shall be fully compensated for by an extension of time to complete performance of the work as provided herein.

GENERAL PROVISIONS

SECTION 5 – CHANGES

G-5.01. Owner's Changes in the Work.

a. The Owner at any time without notice to any Surety may make changes in the work of the Contract by making alterations therein, by making additions thereto, or by omitting work therefrom, and no such action shall invalidate the Contract, relieve or release the Contractor from any guarantee under the Contract, affect the terms or validity of any bond, relieve or release any Surety, or constitute grounds for any claim by the Contractor for damages or loss of anticipated profits. All work required by such alterations, additions, or omissions shall be executed under the terms of the Contract.

b. Other than in an emergency endangering life or property or pursuant to a Field Order, the Contractor shall not make any change in the work nor furnish any labor, equipment, materials, supplies, or other services in connection with any change except pursuant to, and after, receipt of a written authorization from the Owner in the form of a Modification Order. The Contractor shall not be entitled to any increase in the Contract price or extension of the Contract Time, and no claim therefor shall be valid, unless such written authorization has been so issued to the Contractor.

c. The Owner's Representative may authorize minor changes in the work which do not alter the character, quantity, or cost of the work as a whole. These changes may be accomplished by a Field Order. The Contractor shall carry out such Field Orders promptly and without any adjustment of the Contract price or Contract time.

G-5.02. Contractor's Claims.

Any claim for an increase in the Contract Price or extension of Contract Time made by Contractor shall be based on written notice delivered to the Owner's Representative within fifteen (15) days after occurrence of the event giving rise to such claim or within 15 days after Contractor first recognizes the condition giving rise to the claim, whichever is later. Notice of the amount of the claim with supporting data shall be delivered to the Owner's Representative within forty-five (45) days of such occurrence, or within 45 days after Contractor first recognizes the condition giving rise to the claim, whichever is later, unless the Owner's Representative allows, in writing, an additional period of time for Contractor to ascertain accurate cost data. Strict compliance by Contractor with the foregoing provisions is required. Contractor's failure to deliver notice of claim, or failure to deliver notice of amount of claim, within the time period stipulated herein shall render the claim invalid without further consideration or review and no increase in the Contract Price or Time shall be made on account of the claim.

G-5.03. Adjustments in Contract Price.

Any increase or decrease in the Contract price resulting from changes in the work ordered by the Owner or claimed by the Contractor shall be determined as follows:

a. By such applicable unit prices, if any, as set forth in the Contract; or

GENERAL PROVISIONS

SECTION 5 – CHANGES

b. If no such unit prices are so set forth, then by unit prices or by a lump sum mutually agreed upon by the Owner and the Contractor; such unit prices or lump sum being arrived at by estimates of reasonable value prepared in general conformance with the outline set forth in (c) below.

c. If no such unit prices are so set forth and if the parties cannot agree upon unit prices or a lump sum, then determination shall be made as the sum of the following amounts for all work necessary for the changes:

1. Cost of all materials and equipment furnished and incorporated in the work, including extra costs of transportation and off-site storage and manufacturers' field services, if required. The Owner shall be credited for the value of any material or equipment furnished under the original contract and not used as a result of the change, or, at the Owner's option, the unused material or equipment may be turned over to the Owner. Changes in the contract price shall include the following supplemental costs:

   i) The proportion of necessary transportation, travel, and subsistenec expenses of the Contractor's employees incurred in the discharge of duties connected with the work.

   ii) Deposits lost for causes other than negligence of the Contractor, any subcontractor, or anyone directly or indirectly employed by any of them or for whose acts any of them may be liable.

   iii) Losses and damages (and related expenses) caused by damage to the work, not compensated by insurance or otherwise, sustained by the contractor in connection with the performance and furnishing of the work (except losses and damages within the deductible amounts of such property insurance in place), provided they have resulted from causes other than the negligence of the Contractor, any subcontractor, or anyone directly or indirectly employed by any of them or for whose acts any of them may be liable. Such losses shall include settlements made with the written consent and approval of the Owner's Representative. No such losses, damages and expenses shall be included in the cost of the work for the purpose of determining the Contractor's fee. If, however, any such loss or damage requires reconstruction and the Contractor is placed in charge thereof, the Contractor shall be paid for services a fee proportionate to that stated in Subsection G-5.03(c)(7).

   iv) The cost of utilities, fuel and sanitary facilities.

   v) Minor expenses such as long distance telephone calls, telephone service at the site, and similar petty cash items in connection with the work.

   vi) Cost of premiums for additional bonds and insurance required because of changes in the work."

GENERAL PROVISIONS

SECTION 5 – CHANGES

2. Wages paid to workers and foremen and wage supplements paid to labor organizations or directly to individuals in accordance with New York State Prevailing Wage Rate Schedule or labor union agreements, as applicable. No direct payment will be made for Contractor's personnel above the level of foreman or for field office or main office personnel. No direct payment will be made for engineering, drafting or surveying services or personnel, unless agreed to in advance by the Owner. No payment will be made for the extra cost of performing work during overtime hours, unless agreed to in advance by the Owner.

3. Allowances for necessary use of suitable construction equipment, as agreed to in advance by the Owner's Representative, at rates agreed to in advance between the Contractor and the Owner's Representative. In the absence of said advance agreement by the Owner's Representative as to use and cost of equipment, the Owner shall not be obligated to pay for use of said equipment. (Agreement by the Owner's Representative as to the Contractor's use of equipment is for payment purposes only and shall not confer upon the Owner or the Owner's Representative any responsibility for the Contractor's means, methods, techniques, procedures, or the adequacy, sufficiency or safety of the equipment or the use thereof.)

   The rate to be paid for equipment used shall be negotiated, generally based on the current rates listed in Equipment Watch Rental Rate Blue Book for Construction Equipment ("The Blue book"). The number of hours to be paid for shall be the number of hours that the equipment is required to be present and available for immediate service at the site of the extra work. If the equipment is being used in the performance of both contract and extra work simultaneously, the number of hours paid for shall be the number of hours that the equipment is actually used in the performance of the extra work. No payment will be made for equipment which is not required to be available for immediate use at the site of the extra work, as determined by the Owner's Representative.

   An hourly rate for fuel, lubrication and maintenance cost for each applicable item of equipment used on the extra work shall be agreed to in advance between the Contractor and the Owner's Representative. The number of hours for fuel/ maintenance to be paid for shall be the number of hours the equipment is actually required to be running in connection with the performance of the extra work. No direct payment will be made for vehicles or equipment used for support or maintenance of construction equipment, or for Contractor's personnel engaged in such support or maintenance, or for the cost of repairs to construction equipment. No direct payment will be made for the use of hand tools, small power tools or their accessories or appurtenances, ladders, scaffolds, safety equipment, personal protective equipment, reusable forms, surveying or control equipment, general supplies, administrative or personal vehicles or equipment, etc., unless agreed to in advance by the Owner's Representative.

4. Amounts paid to approved subcontractors by the Contractor for necessary work performed by subcontractors in connection with the change, as substantiated by receipted invoices and completed in accordance with these provisions.

GENERAL PROVISIONS

SECTION 5 – CHANGES

5. Sales and use taxes paid by the Contractor, as required by law, but not for materials and equipment to be incorporated in the work, which would be exempt from sales tax in accordance with the provisions of this Contract.

6. Premiums or taxes paid by the Contractor for workmen's compensation and disability insurance, unemployment insurance, FICA tax and other payroll taxes as required by law and premiums for liability insurance as required by this Contract, but only to the extent that such premiums and taxes are increased or decreased as a result of the change. In order to be reimbursed for increases in insurance premiums and taxes resulting from changes, the Contractor must submit documentation satisfactory to the Owner showing the method by which the Contractor's insurance premiums and taxes are computed for each and every kind of insurance and tax. No allowance for Overhead and Profit shall be applied to or made for insurance premiums and payroll taxes paid by the Contractor.

7. An allowance for the Contractor's combined overhead and profit, which shall be negotiated separately for each change, shall be designated as follows:

   i) For changes in the contract scope that result in a net increase in contract price, the Contractor may add twenty percent to the actual total additional cost of material, equipment, plant rentals and direct labor, necessitated by the change as his only compensation for profit and overhead, except that the twenty percent shall not be applied to the premium portion of overtime pay.

   ii) For changes in the contract scope that result in a net decrease in contract price, an amount equal to five percent of such net decrease will be added to the Contractor's credit amount.`

   iii) When one or more tiers of subcontractors perform work on the basis of cost of the work plus a fee, and no fixed fee is agreed upon, the subcontractor who actually performs or furnishes the work, at whatever tier, will be paid a fee of fifteen percent of the costs actually incurred by such subcontractor as a result of the change. Any higher tier subcontractor and the Contractor will each be paid a fee of five percent of the amount paid to the next lower tier subcontractor, except that the total of the fees paid to higher tier subcontractors and the Contractor combined shall not exceed twenty percent of the cost plus fee of the subcontractor who actually performed or furnished the work.

   iv) When any one change involves additions and deletions to the work, the allowance for overhead and profit shall be based on the net increase, if any, with respect to that change."

The Owner shall determine by which of the methods, a, b or c, the Contract Price will be adjusted for any change.

GENERAL PROVISIONS

SECTION 5 – CHANGES

Regardless of the method used to determine the adjustment in Contract Price for any change, the Contractor will be required to submit evidence satisfactory to the Owner to substantiate each and every item of cost that constitutes the Contractor's proposal or claim. Examples of required documentation include, but are not limited to, receipted invoices for major items of materials or equipment actually used or deleted in the change, detailed bill of materials lists, daily time sheets showing labor and construction equipment time expended on the change, receipted invoices from subcontractors containing all the detailed cost accounting information called for herein, receipted invoices for equipment rental, certified payrolls, etc.

For changes paid in accordance with method c, above, the Contractor shall present time sheets showing labor and equipment classifications and hours and materials used each day in performance of the change to the Owner's Representative at the end of each day's work. If the Owner's Representative concurs with the charges made against the change, the Owner's Representative will sign the Contractor's daily time sheet. Work by subcontractors performed under method c shall be similarly verified by the Owner's Representative. The Owner reserves the right to not make payment for time and material charges not supported by a daily time sheet verified and signed by the Owner's Representative.

G-5.04. Modification and Change Order Procedures.

Any change which will alter the Contract Documents or the nature, scope or quality of the work, regardless of whether or not an adjustment in Contract Price or Time will result, shall be initiated and accomplished in writing, in accordance with the procedures contained herein. It is expressly understood and agreed that the Owner reserves the final decision as to the need for and acceptability of changes and that only the Owner can authorize changes in the Contract. Should the Contractor proceed with the performance of extra work, including ordering materials therefore, without having first received a Modification Order, as described herein, the Owner reserves the right to refuse to compensate the Contractor for such extra work or any part thereof.

The following procedures shall be followed in processing changes to this Contract: (As hereinafter used, the word "modification" shall be synonymous with the word "change," and shall include extra work, deleted work, substitutions or any other deviation from the Contract Documents, whether or not an adjustment in Contract Price or Time will result.)

a. In the case of modifications initiated by the Owner or Engineer, the Owner's Representative shall request from the Contractor, in writing, a proposal or estimate. This letter of request will include a description of the modification proposed, an explanation of why the modification is required and a statement as to the method of payment to be used (Time and Materials, Unit Price, Negotiated Price, Lump Sum, etc.).

b. The Contractor shall submit to the Owner's Representative sufficient documentation showing the basis for the proposed modification amount. If lump sum, the Modification Order will at minimum show the estimated materials and labor breakdown so the Project Manager and Engineer can evaluate the proposed work and price. If the work is on a "time and material" basis, a record of the hourly and/or daily labor charges and materials charges shall be attached. If the Contractor's first proposal or subsequent proposals are rejected by the Construction Project Manager, Owner's Representative, and/or the Engineer, each proposal and rejection shall be included with the subsequent proposal documentation.

GENERAL PROVISIONS

SECTION 5 – CHANGES

If a Modification Order is the result of a design change, a copy of the Engineer's stamped detail drawing and/or description will also be attached to the Modification Order.

c. Upon receipt of the Contractor's proposal, the Owner's Representative shall review the Contractor's proposal to determine if, in the Owner's Representative's judgment, the proposal is reasonable and acceptable. In the case of a claim by the Contractor for additional compensation for work already performed, the Owner's Representative shall determine the validity of the claim, and, if valid, verify the costs and/or quantities claimed.

d. When the nature and cost of the proposed or claimed modification is determined to be acceptable to all parties, and all applicable documentation has been submitted to the Owner, the Owner's Representative shall prepare a Modification Order. The Modification Order document shall include a brief description of the proposed modification, an explanation of why the modification is required, the agreed upon price and/or the specific method of payment to be used, and a list of all applicable backup material and documentation. This document will be submitted by the Owner's Representative to the Engineer and the Owner for the Owner's approval and signature. The approved Modification Order, bearing the signature of the Commissioner of the Onondaga County Department of Water Environment Protection will be forwarded to the Contractor by the Owner's Representative.

e. Upon receipt of the approved Modification Order by the Contractor, the Contractor may proceed with the performance of the work described therein. However, the Contractor will not be paid for the modification until it has been satisfactorily performed and a formal Change Order, signed by the Onondaga County Executive, has been executed.

f. All Modification Orders issued for a contract will be numbered serially beginning with the Number 1. After a substantial dollar value of modifications have been performed by the Contractor, the Owner's Representative shall prepare a formal Change Order. The Change Order document will identify, by number and description, the one or more modifications included in the Change Order and the agreed upon final cost or credit for each modification. For modifications where the final price is different from the approved proposed or estimated price contained in the Modification Order or where the adjustment in Contract Price is made pursuant to method 3.c, above, copies of detailed substantiation as the Owner, Owner's Representative, or Engineer may require, shall be provided by the Contractor to the Owner's Representative and the Engineer prior to the Engineer's and/or the Owner's Representative's preparation of the Change Order containing that modification.

g. The Owner reserves the right to have all Change Orders reviewed by the Owner's attorney before the Change Order is presented to the Contractor for signature. After the original Change Order is executed by the Contractor and the Engineer, it will be submitted to the Owner for execution by the Commissioner and County Executive. After signing the Change Order, the Owner will make and distribute the required number of copies. No right to payment for changed, extra or claimed additional work shall accrue to the Contractor in the absence of a formal, fully executed Change Order signed by the Onondaga County Executive.

*The Engineer's signature may not be required on a Change Order if, in the Owner's opinion, the Change Order does not affect the Contract Drawings or the Technical Specifications.

GENERAL PROVISIONS

SECTION 5 – CHANGES

h. Payment of the executed Change Order will be made at the time of the Contractor's regular periodic estimate for work in place.

The only exception to the above procedures will be in case of an emergency situation endangering life, limb, property or public health or safety. In such cases, verbal directives may be used to accomplish immediate action. However, the written procedures described above must subsequently be initiated and completed prior to payment.

G-5.05. Change in Contract Time Associated with Modifications.

a. Unless specifically addressed otherwise on a case by case basis, Modification Orders and Change Orders issued under this Contract will not provide for any change in Contract Completion Time. Accordingly, requests for price proposals for modifications will include the following statement:

"This modification, if approved by the Owner, will not change the stipulated Contract Completion Time. Therefore, please include in your price proposal allowance for all direct, indirect and impact costs which may be necessary to complete the work of this proposed modification, and all other work of this Contract, within the stipulated Contract Completion Time."

b. The following language will be included on all Modification Orders (the letter, signed by the Owner, which establishes the price of the work and authorizes the Contractor to proceed):

"In accepting this authorization to proceed with the work of this modification, it is mutually agreed that the amounts provided for herein will be accepted by the Contractor as full compensation for all costs associated with this modification in the work, including all direct, indirect and impact costs which may be required to complete the work of this modification, and all other work of this Contract, within the stipulated Contract Completion Time. This modification does not change the Time of Completion of this Contract or the Contract Completion Date currently in effect."

c. The following language will be included on all Change Orders (the document which effects payment for one or more modifications and which is signed by both the Contractor and the Owner):

"In executing this Change Order, it is mutually agreed that the amounts provided herein will be accepted by the Contractor as full compensation for all costs associated with these changes in the work, including all direct, indirect and impact costs which may be required to complete these changes, and all other work of this Contract, including previously executed Change Orders, if any, within the stipulated Contract Completion Time. This Change Order does not change the Time of Completion of the Contract or the Contract Completion Date currently in effect."

GENERAL PROVISIONS

SECTION 5 – CHANGES

G-5.06. Adjustment of Contract Time.

a. If the Contractor is obstructed or delayed in the prosecution or completion of the work by the neglect, delay or default of any other contractors for adjoining or contiguous work, or by any damage that may happen thereto, by the unusual action of the elements, or by the abandonment of the work by the employees in a general strike, the Contractor shall have no claim for damages against the Owner or Engineer for any such cause or delay, but the Contractor may in such case be entitled to request an extension of time specified herein for the completion of the Work, provided, however, that claim for such extension of time be made by the Contractor in writing within thirty (30) calendar days from the time when such alleged cause for delay shall occur.

Before the Contractor's time extension request will be considered, the Contractor shall notify the Owner's Representative of the condition which allegedly has caused or is causing the delay, and shall submit a written application to the Owner's Representative identifying:

1. The Contractor and Project description;

2. Liquidated damage assessment rate, as specified in the Contract;

3. Original bid amount;

4. The original Contract start date and completion date;

5. Any previous time extensions granted (number and duration);

6. The extension of time requested;

7. The source and nature of each alleged cause of delay in completing the Work;

8. The date upon which each such cause of delay began and ended and the number of days attributable to each such cause;

9. Without in any way limiting the provisions of Section 4.07 which prohibits damages for delay, a statement that the Contractor waives all claims except for those delineated in the application, and the particulars of any claims which the Contractor does not agree to waive. For time extensions for Substantial Completion and final completion payments, the application shall include a detailed statement of the dollar amounts of each element of claim item reserved; and

10. A statement indicating the Contractor's understanding that the time extension is granted only for purposes of permitting continuation of Contract performance and payment for Work performed and that the Owner retains its right to conduct an investigation and assess liquidated damages as appropriate in the future.

Any extension of time actually granted shall be only for the number of calendar days of delay which the Owner may determine to be due solely to such causes, and then only if the Contractor shall have strictly complied with all of the requirements of this Section.

GENERAL PROVISIONS

SECTION 5 – CHANGES

The Contractor shall not be entitled to receive a separate extension of time for each one of several causes of delay operating concurrently, but, if at all, only for the actual period of delay in completion of the work as determined by the Owner irrespective of the number of causes contributing to produce such delay. If one of several causes of delay operating concurrently results from any act, fault or omission of the Contractor or of his subcontractors or material men, and would of itself (irrespective of the concurrent causes) have delayed the Work, no extension of time will be allowed for the period of delay resulting from such act, fault or omission.

The determination made by the Owner on an application for an extension of time shall be binding and conclusive on the Contractor.

b. Where the Owner accepts an application by the Contractor for an extension of time and/or it is agreed that the Contractor is entitled to an extension of time, the Contract Completion Date shall be adjusted pursuant to a Time Extension Change Order, which shall be signed by the Owner and the Contractor and shall be in the following form and contain the following provisions:

EXTENSION OF TIME CHANGE ORDER

The Contract Completion Date is hereby changed to

_____.

In executing this Change Order, the OWNER And CONTRACTOR mutually agree as follows:

1. The extension of the Contract Time was requested by the CONTRACTOR and the new Contract Completion Date established herein is the date requested by the CONTRACTOR.

2. There will be no adjustment in the Contract Price as the result of this change in Contract Completion Date.

3. The CONTRACTOR waives any and all claims against the OWNER for any and all costs associated with delay in completion of the Contract.

4. Contractor acknowledges the provisions of G-4.07 which prohibits damages for delay and nothing in this Extension of Time Change Order limits such provisions in any way.

5. Without in any way limiting the provisions of G-4.07, the OWNER waives its right to recover Liquidated Damages or Engineering Costs from the CONTRACTOR, from the original Contract Completion Date to the new Date established herein.

6. The OWNER reserves its right to recover from the CONTRACTOR Liquidated Damages and Engineering and Inspection Costs for each and every day that the Contract remains uncompleted after the new Contract Completion Date established herein.

GENERAL PROVISIONS

SECTION 5 – CHANGES

7. All other requirements and provisions of the Contract shall remain unchanged and in full force and effect, including Insurance, Bond and Guarantee Provisions, and the indemnification, defense and hold harmless provisions, and shall extend as necessary to cover the new Contract Time provided herein.

c. The Contractor agrees that he has and will make no claim for damages against the Owner by reason of any act or omission to act by any other contractor or in connection with the Engineer's or Owner's acts or omissions to act in connection with such other contractor, but the Contractor shall have a right to recover such damages from the other contractors, under a provision similar to the following provision which has been or will be inserted in the Contract with such other contractors.

Should any other contractor, having or who shall hereafter have a contract with the Owner relating to the Project or in connection with the work on sites adjoining or adjacent to that on which the work covered by this Contract is to be performed, sustain any damage through any act or omission of the Contractor, the Contractor agrees to reimburse such other contractor for all such damages and he further agrees to defend, indemnify, and save harmless the Owner from all claims for such damages.

d. Permitting the Contractor to continue with Work after the time fixed for its completion has expired, or after the time to which such completion may have been extended has expired, or the making of any payment to the Contractor after such time, shall in no way operate as a waiver on the part of the Owner of any of its rights under this Contract.

G-5.07. Payment of Claims and Disputed Amounts.

Payment of claims made by the Contractor, in accordance with Section G-5.02 above, will only be made by the Owner pursuant to a fully executed Change Order as described in Section G-5.04. In the absence of such a fully executed Change Order, the Owner shall not be obligated to pay any claim or disputed amount. No right shall accrue to the Contractor for interest or other compensation on any claim or disputed amount unless and until a formal Change Order is executed by the Onondaga County Executive.

The Contractor shall carry on the work and adhere to the progress schedule during all disputes or disagreements with the Owner. No work shall be delayed or postponed pending resolution of any disputes or disagreements, except as permitted elsewhere in these Contract Documents or as the Owner and Contractor may otherwise agree in writing.

GENERAL PROVISIONS

SECTION 6 – PAYMENTS

G-6.01. Estimated Quantities.

The Contractor agrees that the estimated quantities stated in the Bid are only for the purpose of comparing on a uniform basis, the bids offered for the work under the Contract, and said estimated quantities may not represent or approximate the quantities actually required to be used in the work. The Contractor further agrees that he is satisfied with and will at no time dispute the said estimated quantities as a means of comparing the bids.

In the event that the quantities of various items actually used are either higher or lower than the quantities stated in the Bid (except as allowed for below), the Contractor agrees that the applicable unit prices bid shall be used as the sole basis for computing payment. The Contractor will make no claim for lost overhead or profit or for other costs incurred as a result of deleted work, unused quantities or overrun quantities.

Where the quantity of any item of unit price work performed by the Contractor differs by more than twenty percent from the quantity stated in the bid and there is no corresponding adjustment with respect to any other item of work, and if the Contractor believes that he has incurred additional expense as a result thereof, the Contractor may make a claim for an increase in the Contract Price in accordance with Subsection G-5.03. Similarly, if the Owner's Representative believes that the Contractor's unit price for any such item is no longer commensurate with the quantity of work performed by the Contractor under that item because the above variation limit has been exceeded, and if the Owner's Representative believes he is entitled to a credit as a result thereof, the Owner's Representative may make a claim for a decrease in the Contract Price in accordance with Subsection G-5.03.

In determining the amount of any increase or decrease in an item of unit price work, the adjusted unit price shall be applied as follows:

(i) Quantity Overruns: The adjusted unit price shall be applied only to the difference between the total quantity of completed work and the calculated bid quantity at the variation limit.

(ii) Quantity Underruns: The difference between the adjusted unit price and the original bid unit price shall be applied to the total quantity of work completed.

G-6.02. Prices.

The prices herein agreed to for the performance of the work shown and as specified and the furnishing of the materials and supplies shall be inclusive, that is, the said price shall include not only the doing of the work and the furnishing of said materials and supplies but also all labor, tools and other materials whether the same are required directly or indirectly unless otherwise specified.

Where work is to be measured for payment by units of length, area, volume or weight as stated in the Bid, only the net amount of work actually done, as it shall appear in the finished work and as measured only inside of the payment lines described in the Contract Documents, or as is ordered, shall be paid for, local customs to the contrary notwithstanding.

GENERAL PROVISIONS

SECTION 6 – PAYMENTS

Where a lump sum price is bid for an item in the Bid, the lump sum price shall be for the work complete as described in the Item and shall include the cost of all equipment, materials, and labor, specified or implied, incidental to the work complete and ready for service and in accordance with the Contract Documents.

G-6.03. Breakdown of Lump Sum Items.

The Contractor shall within three weeks after award of the Contract prepare and submit to the Owner for approval, a breakdown of all lump sum bid prices contained in his Contract, with the total prices apportioned into component parts of the various types and categories of material and labor involved in each lump sum item. The approved breakdown will be used in the preparation of the current estimate.

G-6.04. Current Estimate and Payment.

The Contractor shall make an estimate each month for the Owners Representatives review of the value of the work done and materials incorporated in the work to the date of the estimate, including the amount complete of any fully executed change orders, provided the said monthly work exceeds One Thousand ($1,000) dollars in value. The Owner will pay the Contractor on the basis of these estimates, less any amount previously paid to the Contractor and less the retained amount as hereafter described. The Owner shall retain five (5) percent of each estimate amount until substantial completion of all work covered by this Contract or designated part thereof.

Payment shall be made to the Contractor in accordance with established Onondaga County Comptroller procedures and upon submission of duly completed and approved County Claim Forms, which shall be prepared by the Owner's Representative and signed by the Contractor. The application for payment shall be submitted by the Contractor for review under a fully and accurately completed "Application and Certificate for Payment" form. Three (3) executed forms are required. The signed Claim form, with Current Estimate attached, will be submitted to the County Comptroller by the Department of Water Environment Protection for processing and issuance of a check. Checks will be mailed by the Comptroller to the address shown on the Claim Form. In order to be considered for payment, each submitted Claim Form shall include the Contractor's certification of payment to subcontractors, Form GP-001, appended to these General Provisions.

The Contractor may substitute negotiable Municipal Bonds for retainage, in accordance with New York State Municipal Law and Onondaga County Comptroller procedures. In order to be considered for payment, each submitted Claim Form shall include the Contractor's certification of payment to subcontractors (Form GP-001, included in the appendix to these General Provisions).

G-6.05. Payment for Delivered Equipment and Materials.

The Owner may, at its sole option, include in the Current Estimate the value of selected equipment and non-perishable materials which have been approved and delivered to the site or to an approved off-site location within Onondaga County, New York, for incorporation in the work of this Contract. The value of such equipment and materials shall be determined based on invoices therefore submitted by the Contractor. Such equipment and materials shall be protected by the Contractor from loss or damage, shall be maintained by the Contractor in accordance with manufacturer's instructions and shall at all times be available for inspection by the Owner. The five percent (5%) retainage shall apply to the value of any stored equipment for which payment is made, in addition to the ten percent (10%) retainage for equipment manuals described in the General Specifications, Section S-038.

GENERAL PROVISIONS

SECTION 6 – PAYMENTS

At least twenty days before the date established for each progress estimate (but not more often than once a month), the Contractor shall submit to the Engineer for review an Application and Certificate for Payment. If payment is requested on the basis of materials and equipment not incorporated in the Work but delivered and suitably stored at the site or at another locations agreed to in writing, the Application and Certificate for Payment shall also be accompanied by a bill of sale, invoice or other documentation warranting that the Owner has received the materials and equipment free and clear of all Liens and evidence that the materials and equipment are covered by appropriate property insurance.

G-6.06. Owner's Right to Withhold Payments.

In addition to the retained amounts described in G-6.04, the Owner may withhold from the Contractor so much of any approved payments due him as may in the judgment of the Owner be necessary:

1. To assure the payment of any claims, liens or judgements then due and unpaid of any persons supplying labor or materials for the work;

2. To protect the Owner from loss due to defective or incomplete work not remedied;

3. To protect the Owner from loss due to injury to persons or damage to the work or property of other Contractors, subcontractors, or others caused by the act or neglect of the Contractor or any of his subcontractors; and

4. To compensate the Owner for the value of work which was deleted and for which a credit against the contract amount has not been agreed upon.

5. To insure payment to Owner of all Liquidated Damages incurred or reasonably anticipated to be incurred, where there is reasonable evidenec that the Work will not be completed within the Contract Time, and that the unpaid balance would not be adequate to cover Liquidated Damages for the delay.

6. To insure payment to Owner of any other claims it has against Contractor under the Contract Documents.

The Owner shall have the right as agent for the Contractor to apply any such amounts so withheld in such manner as the Owner may deem proper to satisfy such claims or to secure such protection. Such application of such money shall be deemed payments for the account of the Contractor.

The Owner will not pay, and the Contractor will make no claim for, interest on retained or withheld monies or on amounts in dispute or claimed as extra, in the absence of a fully executed change order therefore.

G-6.07. Beneficial Occupancy and Substantial Completion.

A. For purposes of this Contract, the following definitions shall apply:

1. Beneficial Occupancy: Use or occupancy of the work, or designated parts thereof, by the Owner, even though all of the Contract work, or designated part thereof, may not yet be substantially complete.

GENERAL PROVISIONS

SECTION 6 – PAYMENTS

2. Substantial Completion: Completion by the Contractor of all the work of the Contract, or designated part thereof, except for minor or incidental items, the existence of which will not affect or impede the Owner's full use of the work, as determined by the Owner's Representative.

B. Beneficial Occupancy:

The Owner reserves the right to use or occupy all or parts of the work at the Owner's sole discretion, and before the work or part thereof is substantially complete. However, unless specifically scheduled otherwise in the Special Project Conditions, or by prior agreement, the Owner shall not be required to use or occupy the work or any part thereof until all of it is substantially complete. Beneficial occupancy of the work or part thereof by the Owner shall not relieve the Contractor from completing all the work in accordance with the Contract Documents, or from other contractual obligations, and shall not prejudice the Owner in any way.

Work, or designated parts thereof, will be considered for beneficial occupancy in accordance with the following conditions and procedures, if scheduled or agreed upon:

1. Pipelines, drainage work, earth work, roadways and similar kinds of work not involving equipment or buildings will not be considered for beneficial occupancy until all required testing has been successfully completed and all record drawing and other documentation have been submitted to and accepted by the Owner.

2. Equipment or operating systems will not be considered for use under beneficial occupancy, and will not be considered substantially complete, until all of the conditions and requirements set forth in the General Specifications and the Special Project Conditions have been successfully and completely met.

3. Habitable structures or buildings will generally not be considered for beneficial occupancy until they are substantially complete.

In the event the Owner takes beneficial occupancy of the work or designated part thereof, the Owner's Representative shall prepare and issue to the Contractor a Notice of Beneficial Occupancy, clearly identifying the occupied work, the Contract value of the occupied work, the date of beneficial occupancy, the beginning and end dates of the guarantee period for the occupied work and the continuing responsibilities of the Owner and Contractor for operation, maintenance, utilities, security, insurance, etc. Generally, but not necessarily, the guarantee period for occupied work will commence on the date of beneficial occupancy of that work. Generally, but not necessarily, the retainage amount associated with occupied work will not be reduced until the work is substantially complete, as hereinafter described.

C. Substantial Completion:

When the Contractor has completed the work, or designated parts thereof, to a point that, in the opinion of the Contractor the work is substantially complete, the Contractor shall so notify the Owner's Representative in writing. However, unless specifically scheduled in the Special Project Conditions or agreed to in advance by the Owner, the Owner shall not be obligated to consider any part of the work for substantial completion until all of the work of the contract is substantially complete.

GENERAL PROVISIONS

SECTION 6 – PAYMENTS

1. As soon as reasonably practical after receiving such notification, the Owner's Representative will inspect the work and thereafter advise the Contractor of any deficiencies or other impediments to determining the work to be substantially complete. Note that any such inspection and listing of impediments to substantial completion shall not be construed to be a "final inspection" or "punch list," unless specifically identified as such by the Owner's Representative.

2. When the Owner's Representative determines that the work is, in fact, substantially complete, a final inspection involving all interested parties will be scheduled and conducted by the Owner's Representative. The Owner's operation and maintenance personnel may participate in this inspection or may perform their inspections separately. Following the inspection(s), the Owner's Representative will provide the Contractor with a compiled list of defective, deficient, incomplete or otherwise unacceptable work. This list is commonly referred to as a "punch list." The Owner's Representative will indicate on the punch list his opinion of the estimated cost of completing or correcting each of the items listed thereon.

3. After preparation of the punch list, the Owner's Representative will prepare and issue a Certificate of Substantial Completion. This document will clearly identify the parts of the work which are substantially complete, the value of the substantially completed work, including any fully executed change orders applicable thereto, the date of substantial completion, the beginning and end date of the guarantee period, and the continuing responsibilities of the parties for operation, maintenance, utilities, security, insurance, etc. The punch list will be attached to the Certificate of Substantial Completion and be made a part thereof. (The value of substantially completed work shall be determined from the bid items, or, if no applicable bid items exist, from the Contractor's approved lump sum breakdown.)

G-6.08. Payment at Substantial Completion (Final Payment).

After the Certificate of Substantial Completion is issued for the work, or designated part thereof, the Owner shall make a final payment to the Contractor for the substantially completed work. The amount of the final payment shall be for 100% of the value of the substantially completed work as stated in the Certificate of Substantial Completion, less all prior payments, less any charges for delay, less any amounts withheld pursuant to Section G-6.06 and less two (2) times the value of the punch list.

As a condition precedent to final payment and/or any reduction of retainage by the Owner, the Contractor shall submit the following items, in a form acceptable to the Owner, as the Owner may require:

- An affidavit by the Contractor stating that all claims, judgments and liens have been satisfied and that all vendors and laborers of the Contractor and all subcontractors have been paid in full (unless otherwise specifically noted.)

- Verified statements concerning wage rates from each and every subcontractor, regardless of tier, as described in Section G-2.03.

- A statement by the Contractor of the amounts known by the Contractor to be owed by subcontractors, regardless of tier, to the vendors and laborers of such subcontractors, or a statement that the Contractor has no knowledge of any such amounts owed by subcontractors.

GENERAL PROVISIONS

SECTION 6 – PAYMENTS

- A statement by the Contractor's Surety that the Performance Bond and Labor and Material Payment Bond shall remain in force for the guarantee period.

- A statement by the Contractor's Surety that the Surety has no objcetion to the release of retained monies to the Contractor ("Consent of Surety.")

- Renewal Certificates of Insurance showing that the Contractor's insurance shall remain in force during the guarantee period.

- Releases from property owners, permitting authorities, and code enforcement agencies that all restoration, permit requirements and code requirements have been satisfactorily completed.

- Confirmation in writing from the Contract Compliance Officer that all MBE/WBE and Labor Law requirements are complete.

All prior payments to the Contractor, including those based on quantities of work in place under unit price bid items and those relating to fully executed change orders shall be subjcet to corrcetion by the final payment.

Included in the appendix to these General Provisions is a "Project Closeout/Final Payment Checklist". As a condition precedent to final payment and/or any reduction of retainage by the Owner, the Contractor must submit for review a fully and accurately completed Project Closeout/Final Payment Checklist, including all forms and documentation required in the Project Closeout/Final Payment Checklist.

G-6.09. Acceptance of Final Payment Constitutes Release.

The acceptance by the Contractor of the Final Payment shall be and shall operate as a release to the Owner of all claims and of all liability to the Contractor for all things done or furnished in connection with this work, and for every act and neglect of the Owner and others relating to or arising out of this work. No payment, however, final or otherwise, shall operate to release the Contractor or his sureties from any obligations under the Contract or the Performance Bond.

G-6.10. Completion of Punch List Work.

After all of the remaining items of work indicated on the punch list(s) are satisfactorily completed or corrected, the Owner will release the amount withheld for these items, upon submission of affidavits showing that all claims, liens, judgements, laborers, vendors and subcontractors have been paid in full or otherwise discharged. Partial releases of monies retained for punch list items will not be made. In the event the Contractor fails or refuses to satisfactorily complete or correct the remaining items of work within sixty calendar (60) days from the date of Final Payment, the Owner reserves the right to have the work completed or corrected by others and to deduct the cost thereof from monies otherwise due the Contractor.

G-6.11. Remedial Restoration.

If the Contract contains a bid item for Remedial Restoration, the amount bid for that item will be retained by the Owner in accordance with the payment item description for that item, and in addition to any other retainages or withholdings.

GENERAL PROVISIONS

SECTION 7 – TERMINATION OF CONTRACT

G-7.01. Owner's Right to Stop Work or Terminate Contract for Cause.

If (a) The Contractor shall be adjudged bankrupt or insolvent or make an assignment for the benefit of creditors or make a voluntary petition in bankruptcy, or

(b) A receiver or liquidator shall be appointed for the Contractor or for any of his property and shall not be dismissed within 20 days after such appointment, or the proceedings in connection therewith shall not be stayed on appeal within the said 20 days, or

(c) The Contractor shall refuse or fail to supply enough properly skilled workmen or proper materials, or equipment, or perform consistently acceptable work, or

(d) The Contractor shall refuse or fail to commence work or to prosecute the work or any part thereof with such diligence as will insure its completion within the period herein specified (or any duly authorized extension thereof) or shall fail to complete the work within said period or abandon the work, or

(e) The Contractor shall fail to make prompt payment to persons supplying labor or materials for the work, or

(f) The Contractor shall fail or refuse to regard laws, ordinances or the instructions of the Owner or the Owner's Representative or otherwise be guilty of a substantial violation of any provision of this Contract, then, and in any such event, the Owner, without prejudice to any other rights or remedy it may have, may, by seven (7) days' notice to the Contractor, terminate the employment of the Contractor and his right to proceed, either as to the entire work or (at the option of the Owner) as to any portion thereof, and may take possession of the work and complete the work by contract or otherwise as the Owner may deem expedient, and/or exercise any other right or remedy available to the Owner under the circumstances.

In such case Contractor shall not be entitled to receive any further payment until the work is finished. If the unpaid balance of the compensation to be paid Contractor hereunder shall exceed the expense of so completing the work (including compensation for additional managerial, administrative and inspection services), such excess shall be paid to Contractor, less Liquidated Damages and any other monies which Owner is entitled to withhold from or set-off against Contractor. If such expense shall exceed such unpaid balance, Contractor and his sureties shall be liable to the Owner for such excess.

If the right of the Contractor to proceed with the work is so terminated, the Owner may take possession of and utilize in completing the work such materials, appliances, supplies, plant and equipment as may be on the site of the work and necessary therefor. If the Owner does not so terminate the right of the Contractor to proceed, the contractor shall continue the work.

GENERAL PROVISIONS

SECTION 7 – TERMINATION OF CONTRACT

G-7.02. Termination for Convenience.

The Owner may terminate the contract for its convenience and without cause upon fourteen (14) days notice to the Contractor. Upon receipt of such notice, the Contractor shall immediately cease progressing the work, and shall secure the work and the site as directed by the Owner's Representative. The Owner will compensate the Contractor for the value of the work acceptably performed up to the date of termination and for such other costs as may be mutually agreed upon.

G-7.03. Owner's Right to Make Deductions or Set-Offs in Event of Termination or Stoppage of Work.

Owner may deduct or set-off against any sums due and payable at the time of termination or stoppage of work by Owner, Liquidated Damages and any other withholdings and deductions authorized by the Contract Documents or by law. In the event of Termination for Convenience, Liquidated Damages shall be calculated based upon delay attributable to Contractor as of the date of such Termination for Convenience. Owner's exercise of the right to terminate the contract or to stop work shall not impair or otherwise limit Owner's right to assert any claims it may have against Contractor whether in a legal action or otherwise.

GENERAL PROVISIONS

SECTION 8 – MISCELLANEOUS PROVISIONS

G-8.01. Provisions Required By Law Deemed Inserted.

Each and every provision of law and clause required by law to be inserted in this Contract shall be deemed to be inserted herein and the Contract shall be read and enforced as though it were included herein, and if through mistake or otherwise, any such provision is not inserted, or is not correctly inserted, then upon the application of either party, the Contract shall forthwith be physically amended to make such insertion.

G-8.02. Unlawful Provisions Deemed Stricken.

If this Contract contains any unlawful provision not an essential part of the Contract and which shall not appear to have been a controlling or material inducement to the making thereof, such provision shall be deemed of no effect, and shall, upon notice by either party, be deemed stricken from the Contract without affecting the binding force of the remainder.

G-8.03. Reuse of Documents.

The Contractor, and any subcontractor or supplier or other person or organization performing or furnishing any of the work under a direct or indirect contract with the Owner:

(i) Shall not have or acquire any title to or ownership rights in any of the Drawings, Specifications or other documents (or copies of any thereof) prepared by or bearing the seal of the Engineer or Engineer's consultant; and

(ii) Shall not reuse any of such Drawings, Specifications, other documents or copies on extensions of the project or any other project without written consent of the Owner and Engineer and specific written verification or adaptation by the Engineer.

APPENDIX A

Certification Of Subcontractor
Payment Status
(Form GP-001)

Application and Certificate for Payment

Project Closeout/Final Payment Checklist

CERTIFICATION
OF SUBCONTRACTOR PAYMENT STATUS

I, _____ as _____ of _____

in making application for the issuance of a partial payment under Application for Payment

No. ___ on the project known as _____ do state that:

[ ] No Subcontractor or supplier has been used on this project.

[ ] Each subcontractor and supplier used on this project during this payment period shall be paid for work performed or materials supplied to this project from the proceeds of this partial payment in accordance with the contractual arrangements between the Contractor and the subcontractor or supplier.

[ ] The following subcontractors and suppliers will not be paid for work performed or materials supplied to this project from the proceeds of this partial payment because a dispute exists between the Contractor and the subcontractor or supplier.

_____
(subcontractor or supplier)

_____
(subcontractor or supplier)

_____
(subcontractor or supplier)

I certify that the foregoing statements made by me are true. I am aware that willfully submitting a false or fraudulent statement is punishable by law.

_____ _____
[Name and Title] Notary Public

Dated:_____ Dated:_____

FORM GP-001

LIPO - APPLICATION AND ...IFICATE FOR PAYMENT

TO: County of Onondaga
Lake Improvement Project Office
Onondaga County Department of Water Environment Protection
650 Hiawatha Boulevard West
Syracuse, New York 13204-1194

FROM: (CONTRACTOR)

PROJECT:

APPLICATION NO.:
PERIOD TO:
PROJECT NOS.:

CONTRACT DATE:

Distribution To:
- ☐ OWNER
- ☐ CONSTRUCTION MANAGER
- ☐ DESIGN ENGINEER
- ☐ CONTRACTOR

CONTRACT FOR:

VIA CONSTRUCTION MANAGER:
VIA DESIGN ENGINEER:

CONTRACTOR'S APPLICATION FOR PAYMENT
Application is made for payment, as shown below, in connection with the Contract. Continuation sheet is attached.

1. ORIGINAL CONTRACT SUM..... $ _____
2. Net Change By Change Orders..... $ _____
3. CONTRACT SUM TO DATE (line 1+2)..... $ _____
4. TOTAL COMPLETED & STORED TO DATE ..... $ _____
5. RETAINAGE:
   a. _____ % of Completed Work $ _____
   b. _____ % of Stored Material $ _____
   Total Retainage (Line 5a + 5b) $ _____
6. TOTAL EARNED LESS RETAINAGE..... $ _____
7. LESS PREVIOUS CERTIFICATES FOR PAYMENT..... $ _____
8. CURRENT PAYMENT DUE..... $ _____
9. BALANCE TO FINISH, INCLUDING RETAINAGE
   (Line 3 less Line 6) $ _____

CHANGE ORDER SUMMARY	Additions	Deductions
Total Changes approved in previous months by Owner:	$	$
Total approved this Month:	$	$
TOTALS	$	$

The undersigned Contractor certifies that to the best of the Contractor's knowledge, information and belief the Work covered by this Application for Payment has been completed in accordance with the Contract Documents, that all amounts have been paid by the Contractor for Work for which previous Certificates for Payment were issued and payments received from the Owner, and that current payment shown herein is now due.

CONTRACTOR:

By: _____ Date: _____

CERTIFICATE FOR PAYMENT
In accordance with the Contract Documents, based on on-site observations and the data comprising this application, the Construction Manager and the Design Engineer certify to the Owner that to the best of their knowledge, information and belief the Work has progressed as indicated, the quality of the Work is in accordance with the Contract Documents, and the Contractor is entitled to payment of the AMOUNT CERTIFIED.

AMOUNT CERTIFIED..... $ _____
(Attach explanation if amount certified differs from the amount applied for. Initial all figures on this Application and on the Continuation Sheet that changed to conform to the amount certified.)

CONSTRUCTION MANAGER:

By: _____ Date: _____

DESIGN ENGINEER

By: _____ Date: _____

This Certificate is not negotiable. The AMOUNT CERTIFIED is payable only to the Contractor named herein. Issuance, payment and acceptance of payment are without prejudice to any rights of the Owner or Contractor under this contract.

OWNER ACCEPTANCE
The owner hereby accepts this payment application form from Contractor and the accompanying recommendation and certification from the Construction Manager and the Design Engineer in connection with the Subject Project. The Owner agrees the Contractor is due the Certified amount and authorizes payment of same.

OWNER:

By: _____ Date: _____

LAKE IMPROVEMENT PROJECT OFFICE
650 Hiawatha Boulevard West • Syracuse, New York 13204-1194
315/435-2260 Phone • 315/435-5023 FAX

JOANNE M. MAHONEY, *County Executive.*
PATRICIA M. PASTELLA, P.E., BCEE, *Commissioner*

PROJECT CLOSEOUT/FINAL PAYMENT CHECKLIST

Project: _____

Contractor _____

Contract No. _____ Original Contract Amount:_____

Change Order(s) Amount:_____

Final Contract Amount:_____

CONSTRUCTION:

_____ Issue Notice of Beneficial Occupancy after the following has been accepted:

- ☐ Equipment, piping, electrical, and other applicable testing.
- ☐ Manufacturer's certified start-up reports.
- ☐ Control, alarm and telemetry systems.
- ☐ Painting and labeling.
- ☐ Final cleaning.
- ☐ Safe and efficient means of access provided, including all required environmental and housekeeping facilities.
- ☐ Record drawings and electrical interconnection data.
- ☐ Equipment operation and maintenance manuals, including electronic manuals and information.
- ☐ Owner's training.
- ☐ Spare parts, tools and accessories.
- ☐ Equipment performance periods.
- ☐ Warranties and guarantees.
- ☐ Underwriters Laboratories® and other approved code inspections reports, if applicable.
- ☐ Onondaga County Plumbing approved code inspections reports, if applicable.
- ☐ Onondaga County Building approved code inspections reports, if applicable.
- ☐ Confirmation that temporary utilities have been terminated and payment satisfied. If applicable, confirmation that permanent service has been transferred to OCDWEP.
- ☐ Any other items listed in the Special Project Conditions.

_____ Issue Certificate of Substantial Completion after the following is accepted:

- ☐ Contractor shall request in writing.
- ☐ All conditions of Beneficial Occupancy satisfied.
- ☐ Final inspection by all interested parties once Owner's Representative determines work to be substantially complete.
- ☐ Owner's Representative issues punch list to Contractor.

- ☐ Any other items listed in the Special Project Conditions.

_____Issue Final Payment after the following is accepted:

- ☐ Contractor shall submit final Application and Certificate for Payment.
- ☐ An affidavit by the Contractor stating that all claims, judgments and liens have been satisfied and that all vendors and laborers of the Contractor and all subcontractors have been paid in full (unless otherwise specifically noted).
- ☐ Verified statements concerning wage rates from each and every subcontractor, regardless of tier, as described in Section G-2.03.
    a) Prime Contractor's Labor Certification form (NYS Labor Law Section 220).
    b) Sub-Contractor's Labor Certification form (NYS Labor Law Section 220).
- ☐ A statement by the Contractor of the amounts known by the Contractor to be owed by subcontractors, regardless of tier, to the vendors and laborers of such subcontractors, or a statement that the Contractor has no knowledge of any such amounts owed by subcontractors.
    a) Contractor's/sub-contractor's Affidavit of Payment of Debts and Claims form (AIA Document G706).
    b) Contractor's/sub-contractor's Affidavit of Release of Liens form (AIA Document G706A).
- ☐ A statement by the Contractor's Surety that the Performance Bond and Labor and Material Payment Bond shall remain in force for the guarantee period.
- ☐ A statement by the Contractor's Surety that the Surety has no objection to the release of retained monies to the Contractor.
    a) Consent of Surety to Final Payment form (AIA Document G707).
- ☐ Renewal Certificates of Insurance showing that the Contractor's insurance shall remain in force during the guarantee period.
- ☐ Releases from property owners, permitting authorities and code enforcement agencies that all restoration, permit requirements, and code requirements have been satisfactorily completed.
- ☐ Confirmation in writing from Contract Compliance Officer that all MBE/WBE and Labor Law requirements are complete.

GENERAL SPECIFICATIONS

S-001. Intent of Contract Documents.

The intent of the Contract Documents is to provide for the work herein outlined to be complete in every detail for the purpose designated and the Contractor hereby agrees to furnish everything necessary for such construction, notwithstanding any omission in the Contract Documents.

The Contract Documents comprise the entire agreement between the Owner and the Contractor concerning the work. The Contract Documents are complementary; what is called for by one is binding as if called for by all. The Contract Documents will be construed and governed in accordance with the laws of the State of New York.

The mention of any specific duty or liability of the Contractor in any part of the Contract Documents shall not be construed as a limitation or restriction upon any general liability or duty imposed upon the Contractor by the Contract Documents, said reference to any specific duty or liability being merely for purposes of explanation.

The locations, character, and many details of the work are shown on the Contract Drawings. The work shall be constructed in accordance with these Drawings, and such other drawings as may be furnished from time to time by the Engineer. Should a dimension or detail be omitted, the Contractor shall request an interpretation from the Owner's Representative in writing.

Any error or discrepancy in the Contract Drawings or Specifications discovered by the Contractor shall be brought to the attention of the Owner's Representative by the Contractor before proceeding with the work affected by such error or discrepancy so that the error or discrepancy can be rectified. The Contractor's failure to so advise the Owner's Representative shall be at the Contractor's sole risk and expense.

Except as otherwise specifically stated in the Contract Documents or as may be provided by amendment or supplement thereto, the provisions of the Contract Documents shall take precedence in resolving any conflict, error, ambiguity or discrepancy between the provisions of the Contract Documents and:

(i) the provisions of standards, specifications, manuals, codes or instructions (whether or not specifically incorporated by reference in the Contract Documents); or

(ii) the provisions of laws or regulations applicable to the performance of the work, unless such an interpretation of the provisions of the Contract Documents would result in violation of such law or regulation.

No provision of any such standard, specification, manual, code or instruction shall be effective to change the duties and responsibilities of the Owner, Owner's Representative, Contractor, or Engineer, or any of their subcontractors, consultants, agents, or employees from those set forth in the Contract Documents, nor shall it be effective to assign to the Owner, Owner's Representative, Engineer, or any of their consultants, agents, or employees any duty or authority to supervise or direct the furnishing or performance of the work or any duty or authority to undertake responsibility inconsistent with any of the provisions of the Contract Documents.

GENERAL SPECIFICATIONS

S-002. Precedence of Contract Documents.

Conflicts or discrepancies among the Contract Documents, as defined in Article 4 of the Agreement and further described in Paragraph S-001 of the General Specifications, shall be resolved in the following order of priority:

i) The Agreement and any addendum;

ii) Amendments, revisions or change orders of later date take precedence over those of earlier dates;

iii) The Special Project Conditions;

iv) The General Provisions;

v) The General Specifications;

vi) Drawings and Technical Specifications – Drawings govern Specifications for quantity and location, Specifications govern Drawings for quality and performance. In the event of ambiguity in quantity and quality, the greater quantity and better quality shall govern.

vii) Figured dimensions govern scale dimensions, and large scale Drawings govern small scale Drawings;

viii) The Bid;

ix) The Information for Bidders;

x) The Definition of Terms; and

xi) The Advertisement.

If a conflict or discrepancy cannot be resolved through the above order of priority, the conflict or discrepancy shall be directed to the Owner and Construction Project Manager for final resolution.

S-003. Published Standards and Specifications.

References in the Contract Documents to published regulations, specifications, codes or standards of private and governmental technical societies and agencies shall mean the latest edition of the referenced publication. Where referred to in these Contract Documents, published regulations, specifications, codes or standards shall be followed or complied with as if they were incorporated herein in their entirety, as applicable to the work of this Contract and to the extent that they do not conflict with specific requirements contained in these Contract Documents.

S-004. Care and Protection of Work.

From the commencement until the completion of the work, the Contractor shall be solely responsible for the care of the work covered by the Contract and for the materials, supplies and equipment delivered at the site intended to be used in the work; and all injury or damage to the same from whatever

cause, shall be made good at the Contractor's expense before the final payment is made. The Contractor shall provide suitable means of protection for and shall protect all materials intended to be used in the work, all work in progress, and all completed work. The Contractor shall take all neecssary precautions to prevent injury or damage to the work by flood, fire, freezing or from inclemencies of the weather.

S-005. Collateral Work.

The Owner may execute the project by awarding other contracts, the work under which will proceed simultaneously with the execution of this Contract. Such collateral work will be identified in the Special Project Conditions. The Contractor shall coordinate his operations with those of other Contractors. Cooperation will be required in the arrangement for the storage of materials and in the detailed execution of the work. The Contractor, including his subcontractors, shall keep himself informed of the progress and the detail work of other Contractors and shall notify the Owner immediately of lack of progress or defective workmanship on the part of other Contractors, where such delay or such defective workmanship will interfere with his own operations. Failure of a Contractor to keep informed of the work progressing on the site, and failure to give notice of lack of progress or defective workmanship by others shall be construed as acceptance by him of the status of the work as being satisfactory for proper coordination with his own work.

The Contractor shall afford each other contractor who is a party to such other contracts proper and safe access to the site, a reasonable opportunity for the introduction and storage of materials and equipment, and the proper execution of such other work. The Contractor shall properly connect and coordinate the work with the other contractors. Unless otherwise provided in the Contract Documents, the Contractor shall do all cutting, fitting and patching of the work that may be required to make its several parts come together properly and integrate with such other work. The Contractor shall not endanger any work of others by cutting, excavating or otherwise altering their work and will only cut or alter their work with the written consent of the Owner's Representative and the others whose work will be affected. The duties and responsibilities of the Contractor under this paragraph are for the benefit of such other contractors to the extent that there are comparable provisions for the benefit of the Contractor in said direct contracts between the Owner and such other contractors.

S-006. Access to Work.

The Owner, the Owner's Representative and Construction Project Manager, his Engineers, Inspectors, Agents and other employees, shall for any purpose, and any other parties who may enter into contracts with the Owner for doing work within the territory covered by this Contract shall, for all purposes which may be required by their contracts, have access to the work and the premises used by the Contractor, and the Contractor shall provide safe and proper facilities therefor.

S-007. Covering of Underground Work - Authorization of Owner.

No backfilling or covering of underground work shall be done without authorization by the Owner's Representative. Any work covered without such authorization shall be uncovered, to such extent as directed, or removed and replaced by the Contractor at his expense. If work is ordered stopped, no more work shall be done until such order is withdrawn.

GENERAL SPECIFICATIONS

S-008. Work in Inclement Weather.

Work which is subject to damage by inclement weather or extremes of temperature shall not be performed during such weather or if such weather is imminent unless approved protective measures are in place. The Contractor shall provide all means and methods necessary to protect vulnerable work from damage due to weather and shall replace any work damaged by weather, at no additional cost to the Owner.

S-009. Working Hours.

Unless arranged for in advance and approved by the New York State Department of Labor and the Owner, working hours shall be eight (8) hours per day, five (5) days per week, during daylight hours on weekdays only, except in the event of emergency. The Contractor shall be responsible for complying with all applicable Federal and State Labor Standards and Requirements.

S-010. Disruption of Owner's Operations.

The Contractor shall notify the Owner a minimum of 48 hours in advance of any work which may affect or disrupt the operation of the existing facilities.

S-011. Equipment/Process Isolation.

Any work by the Contractor which requires the mechanical or electrical isolation of an existing piece of equipment, process or system shall be coordinated with the Owner's Representative. Any and all isolation of electrical or mechanical equipment or process shall be accomplished in strict accordance with applicable codes and standards and the Owner's lock-out/tag-out procedures.

S-012. Lines, Grades and Elevations and Restoration of Survey Markings.

The Owner shall provide at least one (1) bench mark in the vicinity of the work for vertical control and shall provide manhole centerlines, corners or base line hubs, as applicable, for horizontal control. The Contractor shall provide reasonable notice and opportunity to establish control points to be provided by the Owner and shall coordinate his operations accordingly.

From the control points provided by the Owner, the Contractor shall be responsible for providing construction surveys as necessary and to construct the work in accordance with the lines, grades and elevations shown on the Contract Drawings.

The accuracy of the Contractor's survey work and calculations is the sole responsibility of the Contractor. The Owner's Representative reserves the right to inspect or check any of the Contractor's survey work and calculations, and the Contractor shall not claim added compensation for any delay occasioned by such checking, nor for any corrective work which may be required as the result of the Contractor's errors. However, the Owner's Representative shall not be obligated to check the Contractor's survey work and the Owner's failure to check the Contractor's survey work shall not relieve the Contractor of his responsibility to construct the work in accordance with the Contract Drawings.

It shall be the responsibility of the Contractor to locate and flag all existing property corner markers and survey monuments.

GENERAL SPECIFICATIONS

Markers shall be flagged and the adjacent property owners shown their locations. Only iron or steel markers or other material with magnetic properties may be used to re-establish property corners.

All survey monuments that are to be preserved and protected in place, shall be fenced and flagged against disturbance or destruction.

Property corner markers, survey monuments, frames, covers, etc., disturbed or moved by the Contractor's operation shall be located, restored, set and replaced by a licensed land surveyor hired by the Contractor at his own expense. Restoration of the property corner markers or survey monuments shall be certified by said surveyor on a map prepared by him which shows the work accomplished. One copy of the map shall be given to the property owner and one copy given to the Owner via the Engineer. Where the right-of-way has been changed, the property corner markers shall be placed at the new right-of-way line. All of the above described work shall be paid for by the Contractor and provided to the Owner, at no additional cost to the Owner.

S-013. Shop Drawings.

Information, including samples, describing in detail all work, materials or equipment to be furnished under the Contract, shall be submitted for review. This information, regardless of form, shall be called "shop drawings."

Shop Drawings shall be submitted sufficiently in advance of the work to permit proper review, including time for necessary revisions and resubmittals. Delay to the work caused by late submission of shop drawings shall be the responsibility of the Contractor making such late submission.

The Owner shall not be obligated to accept or pay for work, materials, or equipment furnished prior to the approval by the Engineer of the Contractor's shop drawings/submittals.

Before submitting each shop drawing, the Contractor shall have determined and verified:

(i) all field measurements, quantities, and specific performance criteria;

(ii) all materials with respect to intended use, fabrication, shipping, handling, and storage requirements pertaining to the performance of the work; and

(iii) all information relative to the Contractor's sole responsibilities in respect of means, methods, techniques, sequences and procedures of construction and safety precautions and programs incident thereto.

At the time of each submission, the Contractor shall give the Owner specific written notice of any variations that the submitted shop drawing may have from the requirements of the Contract Documents. Such notice shall be in a written communication separate from the submittal. The Contractor shall also identify on each shop drawing the specific variation.

Shop drawings shall be separately submitted by specific specification section and/or drawing. Shop drawings shall be stamped, checked and signed by the Contractor for compliance with the Contract Documents. The Contractor's stamp shall also note the date, name of the Project, contract number, submittal number, and the reference specification section and/or drawing number. Eight (8) copies of shop drawings shall be submitted, with (2) reviewed copies returned to the Contractor.

GENERAL SPECIFICATIONS

Shop drawings shall present complete and accurate information relative to all working dimensions, equipment weights, assembly and sectional views; all the necessary details pertaining to coordinating the work of the Contract; lists of materials and finishes; parts lists and the description thereof; lists of spare parts and tools where such parts or tools are required; no-scale control diagrams for control wiring and control piping; and any other items of information that are required to demonstrate detail compliance with the Contract Documents and to coordinate the work with other Contractors.

If called for in the applicable Technical Specifications or if specifically requested by the Engineer, shop drawing submittals for operating or process equipment (e.g., pumps, blowers, compressors, etc.) shall be accompanied by a certification from the equipment manufacturer that the offered equipment meets or exceeds specified requirements at the specified operating conditions. Certified performance curves or test data shall also be submitted, as applicable. For equipment, such as pumps, which is controlled or driven by equipment furnished by other manufacturers, such as variable frequency drives, the driven equipment (pump) manufacturer shall certify that the drive equipment technical information has been reviewed and the drive equipment is suitable for and compatible with the driven equipment, and vice versa.

Shop drawings are reviewed only for the purpose of determining whether or not items proposed to be furnished by the Contractor are in substantial conformity with the requirements of the Contract Documents. Notwithstanding the review of shop drawings, the Contractor is responsible for the accuracy and completeness of such drawings, for the satisfactory operation and performance of the furnished material or equipment and for its complete and proper installation.

The Contractor shall be aware that the Owner incurs a cost for review of shop drawings, including those for equivalent, substitute or alternate products. The Owner will provide only two (2) reviews of shop drawings for any one item of equipment or material. If more than two (2) reviews are required by the Engineer to determine acceptability of any one item of equipment or material, the Owner reserves the right to recover the cost of such additional reviews from the Contractor as a deduct from the Contract Amount.

After shop drawings are accepted by the Engineer, the items described in the accepted shop drawings shall be furnished exactly as described. In the event a manufacturer changes the design of an item subsequent to the acceptance of the shop drawing describing that item, and the change results in additional cost being incurred by the Owner or other Contractors on the project, the Contractor providing the item shall bear such cost.

Detailed procedures for submission of shop drawings shall be established at the Preconstruction Meeting.

S-014. Layout and Coordination Drawings.

The Contract Drawings do not necessarily contain all the details necessary to perform the work. Where applicable or required, these details shall be provided by the Contractor in the form of layout or coordination drawings. In addition to shop drawings, the Contractor, and any applicable subcontractors, shall prepare and submit to the Engineer for review, coordination and layout drawings in sufficient detail to fully describe the work to be performed. Such drawings would include, but not be limited to, pipe laying schedules, pipe fabrication, support and restraint details, pipe, duct and conduit routings, equipment layout and mounting details, concrete placing schedules, reinforcing steel details, structural steel fabrication and erection details, etc.

GENERAL SPECIFICATIONS

S-015. Record Drawings.

As a part of the work of this Contract, record drawings shall be prepared and maintained by the Contractor and shall show the precise, as-built locations of all buried, imbedded or concealed piping or conduit, including piping or conduit fixtures, fittings and accessories, and other buried features installed by the Contractor. Piping, conduit, or other architectural, structural and mechanical features shall also be shown on the record drawings. The contractor shall affix their identification stamp on the record drawings along with the label "Record Drawings." This labeling shall be done for each page of drawings, just above the Engineer's Title Block. Upon Substantial Completion of the Contract, and as a condition of reduction of retainage, the Contractor shall deliver one (1) complete, accurate and legible set of record drawings to the Owner's Representative.

During construction, the Contractor shall keep one set of the Contract Drawings at the project site on which he shall regularly update and show all changes in, or directly associated with, the work under his contract. Such changes shall be neatly and clearly marked on the drawings using colored ink or pencil, and the entire set of drawings shall be kept current on a day-to-day basis in concert with the progress of the work. Where applicable, the change marked on a drawing is to carry the notation "per Change Order No.____", or similar reference which cites the reason for the change. The day to day construction record drawings shall be made available to the Engineer and/or Owner for review upon request.

The following items are examples of some of the types of changes which could occur and are to be recorded by the Contractor.

1. Change in location of project components.
2. Change in elevation of project components.
3. Change in slope of piping system, or of pitched surfaces.
4. Change in materials, such as pipe materials.
5. Change in topographical contours of finished earth surfaces.
6. Change in elevation of finished grades, streets, etc.
7. Additions to project.
8. Elimination of a project component.
9. Relocation of existing underground utilities made necessary because of interference with project components.
10. Unforeseen modifications made to existing structures made necessary by requirements of the work.
11. Relocation of equipment.
12. Changes in mechanical trades components (electrical, heating and ventilating, plumbing).

GENERAL SPECIFICATIONS

In addition, the record drawings shall show the precise as-built locations of all buried, imbedded or concealed piping or conduit, including piping or conduit fixtures, fittings and accessories and other buried features installed by the Contractor.

In addition to the above requirements, the Contractor shall have a record measurement survey performed by a New York State licensed Land Surveyor. This survey shall include rim elevations of all new manholes and structures, invert elevation of pipes at manholes and structures, and length of all new pipe as measured between centers of manholes or structures, as well as angles between centerlines of pipes and tie distances, from all utility frames and covers installed by the Contractor to a minimum of three fixed objects, with sketches and notes, as appropriate. All measurements shall be made to the nearest 0.01 foot. This information shall be marked and shown on a separate record set of Drawings with each marked up drawing stamped, signed and dated by a New York State licensed Land Surveyor, then submit all of the drawings to the Engineer.

The Owner retains the right to withhold a portion of progress payments to the Contractor if day to day record drawings are not kept current in accordance with this section.

Upon substantial completion of the Contract, and as a condition of reduction of retainage, the Contractor (each Contract) shall deliver one (1) complete, accurate and legible set of record drawings and record measurement survey drawings to the Engineer for transmittal by the Engineer to the Owner. The Certificate of Substantial Completion will not be issued until both sets of record drawings (day to day construction and survey record sets) have been received by the Engineer.

S-016. Material, Equipment and Workmanship.

All equipment and materials furnished under the Contract of like type, furnished under one Contract shall be the product of one manufacturer, unless otherwise specified.

All materials and equipment furnished or incorporated in the work shall be new, unused, of the best quality, especially adapted for the service required and whenever the characteristics of any materials are not particularly specified, such materials shall be used as is customary in first class work of a nature for which the material is employed.

All work shall be completed in a first class manner by qualified and skilled tradesmen.

All materials, equipment and workmanship shall be subject to inspection and testing by the Owner's Representative, including work already completed but not yet finally accepted. No work shall be covered or otherwise concealed without the Owner's Representative being afforded an opportunity to inspect same.

Equipment shall be furnished complete with all appurtenances, accessories, tools and spare parts, as specified, and shall be installed in accordance with manufacturer's instructions. All items, supplies and materials necessary for initial startup and operation of the equipment, including lubricants, shall be furnished by the Contractor.

The Contractor shall furnish the services of qualified manufacturer's representatives to adjust and start-up the equipment and to instruct Owner's personnel on its operation and maintenance.

GENERAL SPECIFICATIONS

All equipment shall be furnished by manufacturers who shall have at least three years experience in the design, production, assembly and field service of the equipment of like type, size and capacity.

S-017. Equivalent Product and Substitutions.

Whenever definite reference is made in the Contract Documents to any particular brand name for an item of equipment or material, it is to be understood that any equivalent product complying with the requirements of the Contract Documents, as determined by the Engineer, will be acceptable, unless otherwise specified.

Consideration of equal, substitute or alternate equipment, systems or materials from those specified will be made only after the Contract is awarded. The Engineer will be the judge of equivalence, based on shop drawings or other information as the Engineer may require, and as provided by the Contractor.

Any revisions to the Contract Drawings or to the design of the project necessary to accommodate an equivalent, substitute or alternate product offered by the Contractor and accepted by the Engineer shall be made by the Engineer. The cost of such revisions shall be borne by the Contractor as a deduct from the Contract Amount.

On projects involving more than one prime Contractor, any changes to the work of other prime Contractors required to accommodate or coordinate with an equivalent product shall be borne by the Contractor providing the equivalent product.

In addition to the requirements described above, requests for substitutions shall be made in accordance with the procedures set forth in Appendix A to the General Specifications.

S-018. Delivery and Storage of Materials and Equipment.

Materials and equipment, including Contractor's equipment and tools, shall be delivered and stored on site in such a manner as to not block access to public or private property, disrupt Owner's access for operation or maintenance of the facility or interfere with safety access or equipment.

Equipment and materials stored on site shall be protected by the Contractor from loss or damage, shall be maintained by the Contractor in accordance with manufacturer's instructions and shall at all times be available for inspection by the Owner's Representative.

Unless stated otherwise in the Special Project Conditions, the Owner has no indoor space available for storage of material or equipment.

The Contractor shall provide facilities for safe and secure storage of all equipment and materials, and for protection from the elements and extremes of heat or cold, in accordance with manufacturers' recommendations. The Contractor shall be responsible for maintenance of stored or inactive equipment in accordance with manufacturer's recommendations.

The location of the Contractor's on-site storage facilities shall be coordinated with the Owner. The Contractor shall be responsible for unloading and moving materials and equipment and shall not assume that the Owner has equipment available for that purpose.

GENERAL SPECIFICATIONS

Prior to delivery to the site of any material listed as toxic or hazardous, the Contractor shall submit to the Owner one (1) copy of the Material Safety Data Sheet (MSDS) for the material. In addition, one (1) copy of the MSDS for each item of material shall be prominently posted on the outside of the storage area in a manner which protects the sheets from the weather.

The Contractor shall maintain the storage area, and any other area where materials are being used, in a safe, orderly, neat and clean condition. Materials shall be kept in their original containers until ready for immediate use and shall be segregated. Containers shall be kept covered and only approved containers shall be used for storage, transport, mixing or cleaning. Empty containers shall be disposed of off-site on a regular basis. Cleaning materials and dirty rags shall not be permitted to accumulate on site or in the storage area.

S-019. Material Testing.

The Owner shall provide and pay for field and laboratory testing of installed or placed materials, such as concrete, soils and granular materials, pavement, etc. to determine compliance with the specifications for the in-place characteristics of such materials. The Owner's testing service shall be certified for the type of testing to be performed and all testing shall be in accordance with current standards. The Contractor may provide his own testing at his expense, but the Owner's testing service shall be the sole basis for determining acceptability of materials or compliance with the specifications.

The Contractor shall provide reasonable (24-hour minimum) notice to the Owner's Representative of the Contractor's intent to place concrete or perform other work requiring field testing so that the testing can be arranged. The Contractor shall coordinate his operations with the needs of the testing personnel and shall provide access to the work or material as required by the testing personnel.

If the Contractor fails to provide adequate notice to the Owner's Representative of the Contractor's intent to place material requiring field testing, and as a result thereof the Owner's Representative is unable to arrange for the testing to accommodate the Contractor's schedule, the Owner's Representative may require that the proposed work be deferred or rescheduled until the required testing services are available. The Contractor shall make no claim for damages or delay as a result of any such deferral or rescheduling, or otherwise in connection with or arising from testing by the Owner or the Owner's testing services.

In the event that initial testing indicates the placed material does not comply with the specifications, the Owner may arrange for retesting or additional testing by the Owner's testing service. If the retesting or additional testing confirms that the material does not meet the specifications, the cost of the retesting, additional testing, or subsequent testing of replacement material shall be charged to the Contractor.

The testing paid for by the Owner shall not include testing or analysis of materials for pre-installation approval, such as concrete mix designs or granular materials gradations soil analysis or proctors. These types of testing or analytical services shall be provided by the Contractor.

Any specialized testing of manufactured materials or equipment, such as pipe certifications, steel certifications, pump certifications, etc. shall be provided by the Contractor or the manufacturer of the material or equipment.

GENERAL SPECIFICATIONS

S-020. Old Materials.

All materials removed from old construction and all materials or articles of value found in the excavation or on the site of the work shall be brought to the attention of the Owner's Representative, and if he shall so order, shall be the property of the Owner, and shall be carefully preserved for future use. If not claimed by the Owner, such material or articles shall be removed and disposed of by the Contractor at his own expense.

S-021. Disposal of Spoil.

Unless otherwise noted, any and all spoil or excess material resulting from Contractor's excavations shall be disposed of off site at the Contractor's expense. All costs associated with spoil disposal shall be included in applicable payment items, and no separate or additional payment will be made therefor. Spoil shall be disposed of in accordance with applicable federal or state regulations at sites approved for such disposal by applicable federal or state agencies. The Contractor shall be responsible for locating and providing access to such approved disposal sites and for obtaining required approvals from applicable agencies.

S-022. Cleaning.

On completion of the Contract, all pipelines, buildings and other structures shall be left clean and free from obstructions. All rubbish, refuse, unused materials, Contractor's equipment and tools shall be removed and the site shall be left in a neat and orderly condition for use. All equipment shall be cleaned and left in a clean, and new appearing condition.

Floors shall be left broom clean and finished surfaces shall be free of marks, soil, scratches, dents, etc. Damage to finished surfaces shall be repaired to the Owner's satisfaction prior to final acceptance.

S-023. Ground Available to Contractor.

The Contractor shall confine his operations to such portions of the property of the Owner, and to the rights-of-way or easements acquired for the work as shown. Private property adjacent to the work shall not be entered upon or used by the Contractor for any purpose whatsoever without the written consent of the owner thereof. The Contractor shall provide at his expense for all additional lands required for temporary construction facilities, storage of materials and equipment or access to the work not otherwise provided by the Owner.

All work in connection with the Contract within or bordering on private or public property shall be conducted in such manner as will cause the minimum inconvenience and disturbance to it. No excavated materials or supplies of any kind shall be stored on private or public premises without the Owner's consent, and all walks and driveways shall be kept open to uninterrupted passage.

S-024. Protection, Security and Maintenance of Site.

The Contractor shall be responsible for protecting and securing the site of the work from trespass, entry, malicious mischief and vandalism and shall erect and maintain fences, lights, barricades, signs or other devices as necessary to warn the public of hazards and secure the site from accidental or unauthorized entry.

GENERAL SPECIFICATIONS

The Contractor shall maintain the site in a safe, neat and orderly condition and shall promptly remove on a regular basis and at his expense all dirt, rubbish and debris resulting from his operation. Prior to removal, rubbish shall be placed and stored in approved containers, such as "dumpsters," provided by the Contractor. The Owner's facilities shall not be used. On-site burning or burying of rubbish will not be permitted. On a multi prime contract project, each prime contractor shall be responsible for maintaining their respective work areas, cleanup and removals.

The Contractor shall not load nor permit any part of any structure associated with the work to be loaded in any manner that will endanger the structure, nor shall the Contractor subject any part of the work or adjacent property to stresses or pressures that will endanger it.

The Contractor is responsible for ensuring the safety of the site for the Contractor's personnel, owner's representatives, other officials and the general public. Barricades, fencing, cones, barrels and equipment shall be maintained in a safe manner. Hazard warning lights shall be placed and continuously maintained to alert drivers and pedestrians to the construction site after dark. The Contractor shall provide trained personnel to control traffic any time vehicles or equipment are moved on or off the site.

The Contractor shall also continuously maintain the site to prevent and/or remove any and all litter, mud, dirt, and loose materials from the site and adjacent areas. Streets shall be maintained in a clean, non-muddy, non-dusty condition by sweeping and/or water cleaning on a daily basis.

S-025. Protection and Restoration of Existing Structures, Facilities and Features.

The Contractor shall, at his own cost and expense, sustain in their places and permanently protect from direct or indirect injury any and all utilities, structures and property in the vicinity of his work, whether over or underground, or which appear within the trench or excavations, and the Contractor shall assume all costs and expenses for direct or indirect damage which may be occasioned by injury to any of them.

The Contractor shall contact Dig Safely New York at 1-800-962-7962 and notify the proper utility companies at least seventy-two (72) hours before construction is started adjacent to utilities.

If the work of this Contract involves excavation on sites of existing treatment plants or pump stations owned by the Owner, prior to performing such excavation, the Contractor shall notify the Owner's Representative so that the Owner's internal underground facilities protection procedures may be implemented. Under this procedure, the Owner's personnel will mark or identify on-site underground facilities, such as pipes, wires or conduits, which may be in or near the area of the Contractor's proposed excavation. In the event the Contractor fails to provide such prior notification, or fails to provide reasonable and sufficient time for the Owner's personnel to research and identify possible conflicts, or fails to observe and protect identified underground facilities, and such facilities are damaged or destroyed by the Contractor's operations, the Contractor shall be responsible for any and all direct, indirect or consequential costs incurred by the Owner as a result of such failure. Furthermore, in such event, the Owner's Representative may order the Contractor to make immediate permanent or temporary repairs of damaged facilities, at the Contractor's sole expense, as directed by the Owner and to the Owner's satisfaction, or the Owner may elect to have the repairs performed by others, with the cost thereof to be borne by the Contractor and deducted from monies otherwise due the Contractor.

GENERAL SPECIFICATIONS

All trees, shrubs and the like at the construction site shall be preserved and protected by the Contractor, except those that are specifically indicated to be removed at no additional cost to the Owner.

The Contractor shall protect adjacent and other property from damage and shall repair and restore to the satisfaction of the Owner any and all existing facilities, structures, equipment, surfaces, finishes or other features which may become damaged or disturbed as a result of the work of this Contract or the activity of his personnel. The Contractor shall not load nor permit any part of any existing structure to be loaded in any manner that will endanger the structure, nor shall the Contractor subject any part of adjacent properties to stresses or pressures that will endanger them.

The Contractor shall replace all pavement, driveways, fences, shrubs, lawns, trees, and any other public or private property damaged as a result of the work performed under this Contract. All such replacement shall be done in accordance with the applicable specifications and no separate or extra payment will be made unless specifically provided for in the Payment Items. In all cases, said replacement shall be at least equal to the original conditions.

The Contractor shall contact, in writing, the Gas Main Owner 72 hours prior to exposing these facilities. The Contractor shall not expose any listed or located gas main unless a representative of the Gas Main Owner is contacted and has the opportunity to be present during the Work.

1. No work shall take place in the proximity of gas mains until the facilities are located and marked. These locations and markings shall be protected and maintained by the Contractor throughout the construction duration.

2. When working in the general vicinity of gas mains, extreme care shall be taken. All excavation within 3 feet of the mains shall be done by hand in order to protect the pipe and its corrosion control wrapping.

3. All rules and regulations for the safety and protection of personnel and gas mains shall be adhered to while work is being performed in the vicinity of gas mains, included but not limited to the NYS Department of Labor Industrial Code No. 53.

4. Gas Main Owner may provide their own special protection for exposed gas mains. The Contractor shall cooperate with and provide safe access for Gas Main Owner's personnel in installation of such protection.

   Address of the Gas Main Owner is as follows:

   Consumer Adviser
   Electric/Gas Sales & Services
   National Grid
   300 Erie Boulevard West
   Syracuse, NY 13202

The Contractor shall notify the Engineer of his 1) contacts of Gas Main Owner prior to exposing mains; and 2) schedule for Gas Main Owner's personnel to be on site; not less than 48 hours prior to exposing gas mains.

GENERAL SPECIFICATIONS

S-026. Existing Features Found Different.

When any existing surface or subsurface feature is found to be materially different than represented by the Contract Documents or than could have been observed prior to bidding, the Contractor shall immediately notify the Owner prior to disturbing the feature. Any change in the Contract Documents necessitated by the conditions found different shall be accomplished in accordance with the Changes Section of the General Provisions.

Any claims arising out of the conditions found different shall be administered in accordance with Subsection G-5.02 of the General Provisions.

a. Asbestos, PCB's, Petroleum, Hazardous Waste, Mercury, or Radioactive Material

The Owner shall be responsible for any pre-existing asbestos, PCB's, petroleum, hazardous waste, mercury, or radioactive material uncovered or revealed at the site which was not shown or indicated in the drawings or specifications or identified in the Contract Documents to be within the scope of the work and which may present a substantial danger to persons or property exposed thereto in connection with the work at the site. The Owner shall not be responsible for any such materials brought to or generated at the site by the Contractor, subcontractor, suppliers or anyone else for whom the Contractor is responsible.

If a hazardous condition is encountered, the Contractor shall immediately: (a) stop all work in connection with such hazardous condition and in any area affected thereby, and (b) notify the Owner (and thereafter confirm such notice in writing). The Owner will either have the hazardous condition remediated by a third party under the Owner's direction, or direct the Contractor to remediate the hazardous condition under a change order in accordance with Section 5 of the General Provisions.

If the Owner elects to contract with a third party under the Owner's direction:

(i) The Contractor shall not be required to resume work in connection with such hazardous condition or in any such affected area until after the Owner has obtained any required permits related thereto and delivered to the Contractor special written notice: (a) specifying that such condition and any affected area is or has been rendered suitable for the resumption of Work, or (b) specifying any special conditions under which such work may be resumed by the Contractor. If the Owner and Contractor cannot agree as to entitlement to or the amount or extent of an adjustment, if any, in Contract Price or Contract Times as a result of such work stoppage or such special conditions under which the work is agreed by the Contractor to be resumed, either party may make a claim therefor as provided in Section 5 of the General Provisions.

(ii) If after receipt of such special written notice the Contractor does not agree to resume such work based on a reasonable belief it is unsafe, or does not agree to resume such work under such special conditions, then the Owner may order such portion of the Work that is in connection with such hazardous condition or in such affected area to be deleted from the work. If the Owner and Contractor cannot agree as to entitlement to or the amount or extent of an adjustment, if any, in Contract Price or Contract Times as a result of deleting such portion of the work, then either party may make a claim therefor as provided in Section 5 of the General Provisions.

(iii) To the fullest extent permitted by laws and regulations, the Owner shall indemnify and hold harmless the Contractor, Subcontractors, and the officers, directors, employees, agents, and other subcontractors of each and any of them from and against all claims, costs, losses and damages arising out of or resulting from such hazardous condition, provided that: (a) any such claim, cost, loss or damage is attributable to bodily injury, sickness, disease or death, or to injury to or destruction of tangible property (other than the work itself), including the loss of use resulting therefrom, and (b) nothing in this subparagraph shall obligate the Owner to indemnify any person or entity from and against the consequences of that person's or entity's own negligence.

If the Owner directs the Contractor to remediate the hazardous condition under a change order, the work shall be performed in accordance the technical specifications contained in these contract documents or as included in the change order documentation."

S-027. Pollution Control and Purchase and Use of Recycled Products.

The Contractor shall be responsible for preventing the discharge or release of pollutants to the environment, including the air, land (soil), surface water or ground water.

The Contractor shall not permit pollutants, such as chemicals, solvents, fuels, lubricants, sewage, contaminated, silt-laden or heated water or other deleterious poisonous, toxic or oxygen-demanding substances to leach or flow into the ground or into surface or ground waters or into storm or sanitary sewers. The Contractor is responsible for providing all means and methods necessary to prevent or control erosion of disturbed areas and to prevent the discharge to, or creation of, sediments or turbidity in surface waters. The Contractor shall comply with all laws, rules or regulations of all local, New York State or Federal agencies concerning pollution control and protection of the environment. The Contractor shall be responsible for defending and indemnifying the Owner from and against any enforcement actions arising from the Contractor's failures to prevent pollution or to comply with applicable laws, rules and regulations, and shall pay any fines, penalties or judgements arising therefrom.

Onondaga County policy dictates that the use and purchase of mercury containing equipment shall be minimized to the greatest extent possible. Therefore, wherever a feasible alternative exists, the contractor shall specify mercury free equipment. Examples of common products for which mercury free alternatives shall be specified, include, but are not limited to, thermostats, level float/switches, tilt switches, high-intensity discharge (HID) lighting fixtures, manometers, vacuum gauges, and flow gauges. Fluorescent lighting fixtures are acceptable under this policy. Whenever the installation of mercury containing equipment or devices (other than fluorescent lighting fixtures) is necessary, said equipment shall be clearly marked with appropriate signage stating "Contains Mercury."

It is County policy to actively pursue the purchase of products that are manufactured from recycled materials for backfill or components of construction projects undertaken by the County. Where recycled products are of equal value and equal or less costs, the recycled product shall be chosen. The Contractor shall make every effort to adhere to this policy, and shall document such efforts.

GENERAL SPECIFICATIONS

S-028. Maintenance of Flow.

The Contractor shall, at his expense, provide for and maintain the flow of all sanitary sewers, storm sewers, drainage ways, watercourses, house services and other similar facilities encountered during the course of the work. No pipe or channel shall be permanently blocked, plugged, cut or otherwise interrupted without the written permission of the Owner's Representative, regardless of the apparent condition, appearance or status thereof.

Sewage shall not be pumped or discharged onto the ground or allowed to flow into storm sewers, drainage ways or surface waters.

The Contractor shall not permit soil, sediments or pollutants, surface water or ground water to enter any active sanitary or combined sewer. Before any new sewer is connected to the existing, in-service sewer system, the new sewer shall be inspceted by the Owner's Representative and any and all foreign materials removed therefrom by the Contractor.

S-029. Maintenance of Utilities.

Utilities, including water, sewer, electricity, telephone, gas, alarm services, cable TV, etc. serving private or public users shall be maintained as continuously as possible. Prior to any planned, or expected necessary interruption of a utility, the owner of the utility and the utility customer shall be given reasonable notice (preferably 72 hours) of such interruption. The interrupted utility shall be restored and returned to service by the Contractor, or by the utility's owner as soon as possible after the interruption. In any case, utilities serving occupied residences shall not be interrupted prior to 9:00 A.M. and shall be restored by 4:00 P.M. every day. If the utility cannot be restored by 4:00 P.M., the Contractor shall, at his expense, make alternate arrangements to provide the utility service to the residence.

Interruptions of utilities serving commercial or industrial establishments or public or institutional facilities shall be coordinated 72 hours in advance with the owner thereof to minimize the effect of the interruption on the operation of the establishment or facility.

Affected fire departments or dispatchers shall be notified of any interruption of service to fire hydrants, sprinkler systems or alarm systems.

Utilities shall be restored to the satisfaction of the Owner thereof and in accordance with all applicable codes, rules and regulations. Unless noted otherwise in the Special Conditions, the Contractor shall bear all costs of maintaining or restoring utilities, whether the work thereof is performed by the Contractor or the utility owner. Utility owners may reserve the right to perform maintenance and/or restoration of their respective facilities with their own forces and to charge the Contractor the cost thereof.

S-030. Work by Utilities.

The Contractor shall coordinate and cooperate with public or private utility owners in protecting or relocating their facilities, whether the utility's work is in connection with the work of this Contract or otherwise. The Contractor shall provide access across his work to utility owners as required by the utility owner for the performance of work or inspection.

GENERAL SPECIFICATIONS

S-031. Maintenance of Traffic.

The Contractor shall be responsible for providing all necessary means and methods to maintain safe and orderly vehicular and pedestrian travel through and around the work area. The Contractor shall provide flagmen, lights, signs, barricades, detours, temporary roadways or walkways or other devices or facilities as required by the owner of the roadway on which travel may be obstructed as the result of the Contractor's operations. As a minimum, all traffic warning and control methods and devices shall be designed, constructed, placed and installed in accordance with the *Manual of Uniform Traffic Control Devices*, current edition.

If a traffic maintenance plan is included in the Contract Drawings, the Contractor shall furnish, install and maintain all facilities necessary to implement the plan and shall in all ways comply with the plan as to coordination, approvals, location and timing. Whether or not a traffic maintenance plan is specified, the Contractor may be required to meet with appropriate officials to develop or modify a plan, and any such plan shall be implemented at the Contractor's expense.

Local police and emergency services, DPW's and school dispatchers shall be notified by the Contractor prior to each day's operations if such operations will disrupt traffic in any manner.

Any interruptions of access to public or private property shall be coordinated with the property owner and shall be of absolute minimum essential duration. If required by the property owner, the Contractor shall provide alternate means of access, at no additional cost.

S-032. Utilities Used by Contractor.

The Contractor shall be responsible for obtaining and paying for any utility services required by him in connection with the performance of the work of his contract, including telephone, water and electrical services. If the work of the contract is within existing facilities owned by the Owner, and required utilities are available within the facility, the Contractor may use the services to the extent necessary to perform the work and the cost of such services shall not be charged to the Contractor. In no case, however, will the Contractor be permitted to use existing utilities if such use will disrupt the continued, reliable operation and maintenance of the facility. The Contractor shall bear all costs associated with delivering the required utility services from existing points of availability to the site of the work and shall restore to the satisfaction of the Owner any existing systems disturbed as a result of his use thereof. Any connections made by the Contractor to utility systems shall be in accordance with all applicable codes and standards, shall be arranged to prevent disruption or damage to the facility or hazard to personnel and shall be approved by the Owner in advance. The Contractor shall be responsible for providing OSHA-approved extension cords and ground fault circuit interrupters where required.

S-033. Temporary Facilities.

The Contractor shall be responsible for providing and maintaining all temporary facilities necessary for the proper, safe and efficient performance of the work and for the safety, health and welfare of personnel. The following temporary facilities shall be provided, as required or applicable to the work:

A. Heat, ventilation, lighting and water.

GENERAL SPECIFICATIONS

(1) Prior to beneficial occupancy of a building or a system or equipment within a building, the Contractor shall provide facilities to maintain an inside tempefature of at least 45°F, unless higher temperatures are required for performance of work, such as painting, as recommended by material or equipment manufacturers.

(2) After beneficial occupancy of a building or equipment or systems within a building, inside temperatures shall be maintained at 60°F minimum.

(3) Ventilation shall at all times be provided as required to maintain safe working conditions, in accordance with applicable regulations and material manufacturer's recommendations. After beneficial occupancy, ventilation shall be provided as required by applicable codes and standards.

(4) Installed heating, ventilating and lighting equipment may be used if agreed to by the Owner and if that equipment and the systems serving that equipment have been taken under beneficial occupancy by the Owner. Otherwise, the Contractor shall furnish, install and maintain all required equipment. Any installed or permanent equipment used by the Contractor to provide temporary services shall be cleaned or restored by the Contractor to the satisfaction of the Owner prior to substantial completion.

(5) All electrical equipment and installations shall be in accordance with applicable codes, standards and regulations.

(6) The Owner will pay for utilities consumed for temporary heat, light, ventilation and water if available in an existing facility, in accordance with S-032. Otherwise, the Contractor shall provide all utility services and fuel.

B. Sanitary facilities for use by Contractor's personnel, in sufficient numbers, placed and maintained in accordance with applicable codes and standards. The Owner's facilities shall not be used by Contractor's personnel.

C. Facilities to secure the site, enclose buildings or structures and protect the work and personnel. The Contractor shall provide construction locks on all new doors and gates. Prior to beneficial occupancy, the Contractor shall remove construction locks and furnish and install permanent locks keyed to the Owner's standard keying system. Openings and drop-offs shall be barricaded, secured or protected in accordance with applicable regulations.

D. Facilities to access the work, such as snow removal, roadways, ladders, scaffolds, etc. Temporary roadways shall be removed and disturbed areas restored by the Contractor prior to substantial completion. Ladders, scaffolds and similar devices shall be furnished, placed, erected and maintained in accordance with applicable regulations.

E. Storage and field office facilities for the Contractor's use.

F. Field office facilities for use by Owner's Representative, if called for elsewhere in the Contract Documents.

G. Any other temporary facilities called for elsewhere in the Contract Documents.

GENERAL SPECIFICATIONS

On a project on which there are multiple prime contractors, the General Contractor shall provide items A, B, C and F, above, including any electrical work associated therewith, for the use of all contractors on the site. Snow removal shall be provided by the General Contractor. Other temporary facilities shall be provided, maintained and removed by the respective contractor requiring such facilities.

S-034. Hangers, Supports and Restraints.

The Contractor shall be responsible for providing suitable hangers, supports and restraints for all piping and equipment furnished under the Contract, whether shown on the Contract Drawings or not. Unless shown or specified otherwise in the Contract Documents, hangers, supports and restraints shall be furnished and installed in accordance with all applicable codes and standards. All hardware shall be specifically designed for the application intended and shall be of a materials or finish which will prevent corrosion in the in-service atmosphere in which it is located. Shop Drawing information on proposed hangers, supports and restraints, whether manufactured, or fabricated, shall be provided.

S-035. Chases, Openings, Sleeves, Inserts, Embedded Items.

Where there is more than one Contractor on a project, the General Contractor shall install in new floors, walls, roofs and other structures constructed by him all sleeves, inserts, chases, openings, etc. to accommodate his own work and the work of other Contractors. The sleeves, inserts, anchors or other embedded or built-in items shall be furnished by the Contractor needing the item to the General Contractor, and installed in the new construction by the General Contractor. Embedded pipes and conduits and their appurtenances shall be installed in the new construction by the Contractor responsible for providing those items. It is the responsibility of the General Contractor to give other Contractors reasonable notice as to when items provided by other Contractors are required to be placed in the work.

Each Contractor shall be responsible for confirming or providing the locations and sizes of openings required for his work and shall provide layout drawings as necessary to modify or supplement the Contract Drawings and to provide direction to the General Contractor. The work shall be scheduled and coordinated by all parties to allow reasonable time to prepare layout drawings and locate required openings. Any cost caused by defective, ill-timed, mislocated or missing work shall be borne by the Contractor responsible therefor. No Contractor shall alter the work of any other Contractor without the consent of the Owner's Representative and the other Contractor involved.

Where sleeves, inserts, chases or openings are required in existing floors, walls, roofs or other structures, they shall be provided by the Contractor requiring those items to accommodate that Contractor's work. Patching, finishing or sealing around pipes, ducts or conduits shall be by the Contractor installing the pipe, duct or conduit in the opening or sleeve.

S-036. Labeling.

A. Wire Labeling.

All wires, including those in shop fabricated equipment as well as field wiring, shall be labeled with approved, pre-printed, wrap-around labels made for the purpose. Labels shall be affixed to wires at each and every point of termination. Wire labeling designations shall correspond with terminations shown on wiring diagrams and in Electrical Interconnection Data forms.

GENERAL SPECIFICATIONS

B. Equipment and Control Labeling.

All items of equipment shall be provided with prominent labels clearly identifying the equipment by name and number (e.g., Sludge Transfer Pump No. 2, Power Roof Exhauster #1; Unit Heater No. 3). Disconnects, switches, controls or control panels shall be similarly labeled to correspond to the equipment to which they pertain. Electrical panels and equipment, such as lighting panels, transformers, and motor control centers, shall be labeled to correspond with their designations on record drawings and/or Electrical Interconnection Data Sheets. Operating control devices (e.g., switches) and indicators mounted on or in control panels shall be clearly labeled as to function, using nomenclature consistent with the operating instructions for the equipment controlled. Cubicles of motor control centers, and the devices mounted therein, shall be labeled.

Labels shall be engraved, laminated plastic, engraved metal with contrasting lettering or other approved means. Labels shall be rigidly secured with rivets, screws or permanent adhesive. Labels shall be provided by the Contractor who furnished the equipment or device.

C. Electrical Conduit Labeling.

All electrical conduit, including rigid conduit, flexible conduit, plastic or plastic coated conduit and electrical metallic tubing (EMT), shall be field labeled with the appropriate conduit designation or identification, as shown or scheduled in the Contract Documents or on approved shop drawings or layout drawings. Labels shall be placed at each end of each conduit run, at any and all intermediate junction boxes, panels, fixtures, enclosures or other devices and at the point where conduit emerges from concealment, burial or embedment. In unfinished spaces or where conduit is not to be painted and is exposed, the labeling shall be accomplished with indelible marker pen or paint, neatly hand lettered on the exterior surface of the conduit so that the label is readily visible and readable. Where conduit is not exposed, the conduit shall be labeled using neatly hand lettered, non-metallic tags securely attached to the conduit inside the panel or box to which the conduit is connected. In finished spaces where conduit is exposed or where conduit is to be painted, the conduit shall be labeled using embossed or stamped, metal (aluminum or brass) bands, at least half-inch wide, rigidly and permanently attached to the exterior surface of the conduit so that the label is readily visible and readable.

D. Pipe Labeling.

All piping which is not buried or embedded shall be painted in accordance with the Owner's standard color-coding system. Piping shall also be provided with approved, permanently attached, durable labels which identify pipe contents and normal direction of flow. Labels shall be placed on piping at intervals of not more than 15 feet, where pipes emerge from embedment and at changes in direction.

S-037. Electrical Interconnection Data.

Any Contractor performing field wiring, either directly or by subcontract, shall provide detailed interconnection data for all equipment field wired as part of that Contractor's work. The required information shall be entered by the Contractor's personnel, at the time the terminations are made, on the form entitled "Electrical Interconnection Data" included herein with Appendix A. Blank copies of this form will be furnished by the Owner's Representative to the Contractor for the Contractor's use. It is the

GENERAL SPECIFICATIONS

intent of this requirement that each and every field termination on the project be represented by a line entry on an Electrical Interconnection Data form.

A separate Electrical Interconnection Data form (consisting of multiple pages, if necessary) shall be completed for each and every separate enclosure, fixture, panel, box or device containing field wire terminations, without exception. A separate form shall be completed even in the simplest case of an enclosure or box containing only a single toggle switch, push button, lamp, etc., and even if the completed form for that enclosure contains only one or two line entries.

In the heading of the form, the Contractor performing the wiring shall enter the description (e.g., MCC #1, Flow Meter Control Panel, Remote Stop-lockout for Recycle Pump #1, Light Panel #1, Raw Sewage Pump #1 Drive, etc.) and location (e.g., northeast corner of control room, top of stair at south end of Gallery #2, ceiling of conference room, end of walkway at Aeration Tank #1, etc.) of the enclosure or device which is the subject of that particular form. The name(s) of the Contractor's employee(s) actually doing the work in that enclosure and completing the form shall be indicated on the line "Prepared By." All information called for in the body of the form shall be entered on the form by the Contractor's personnel actually doing the work. In the body of the form, on the left side, under the heading "This Equipment/Device," the function (e.g., Drive power, speed control signal, control power, on-off indication, stop/lock out, thermostat control, lighting, etc.) and the factory or field applied terminal numbers or designations on the device(s) or leads in the enclosure shall be entered. The field-applied wire label number and color of the wire actually connected to the terminal or lead shall be entered in the respective columns under "Field Termination." The number or designation of the conduit connected to the enclosure and containing the respective conductors shall be entered in the column "Conduit Out." The nature and location of any and all intermediate splices or devices on the wire run shall be indicated in the column "Intermediate Devices, Junction Boxes, etc." Under the heading "Destination," the description and location of the device or equipment at the far end of the wire run shall be indicated, including the designation of the conduit connected to the remote enclosure and the terminal number or designation on the device or leads mounted in the enclosure. The field-applied wire label designation and wire color at the destination enclosure should be the same as those at the origination and as indicated on the left side of the form. If, however, there is a difference, the actual wire label designation and color shall be noted in the remarks column.

The completion of an Electrical Interconnection Data form for each and every field wired item of equipment or device is a part of the work of the Contractor performing the field wiring of that equipment or device and that Contractor is wholly responsible for the completeness and accuracy of the information contained therein. After field wire termination work has commenced, and as it progresses, the Contractor shall present the Electrical Interconnection Data forms to the Owner's Representative for review. Periodic, progress or monthly payment will not be released to the Contractor in the absence of properly completed, legible and accurate Electrical Interconnection Data forms covering all field wire terminations completed to the cutoff date of that payment.

The Contractor shall retain and safeguard the completed Electrical Interconnection Data forms until the work of the Contract is substantially complete, at which time all of the completed Electrical Interconnection Data forms shall be turned over by the Contractor to the Owner's Representative, who will transmit them to the Owner. The Contractor's retainage will not be reduced, as otherwise provided, until a complete set of properly completed, legible and accurate Electrical Interconnection Data forms has been accepted by the Owner.

GENERAL SPECIFICATIONS

S-038. Equipment Manufacturers' Manuals and Information.

All equipment, devices or materials furnished by the Contractor as a part of the work of this Contract shall be accompanied by all information, instructions and data necessary for the proper and complete care, operation, maintenance and repair of the equipment, device or material by the Owner's personnel. The required information, instructions and data shall be prepared and compiled by the manufacturer of the equipment, device or material and shall hereinafter be referred to collectively as "equipment manuals."

In addition to any specific requirements of other sections of the Contract Documents, equipment manuals shall be required for any and all items containing moving parts, electric or electronic wiring or components, pneumatic or hydraulic devices or components, or requiring regular or special maintenance, cleaning or lubrication. In addition to major items of equipment, this requirement for submission of equipment manuals is intended to also apply to such items as locksets, door, gate and window hardware, finishes, carpeting and upholstery, furniture, electrical and lighting system components, fixtures and accessories, HVAC system components, fixtures and accessories, valves, piping system components, fixtures and accessories, plumbing system components, fixtures and accessories, etc.

Each equipment manual shall clearly and specifically identify the equipment or item which is the subject of the manual, including, as applicable, the model name and number, size, serial number(s) and optional features or accessories actually included with the furnished equipment. Each equipment manual shall also include the following kinds of information, as applicable to the item which is the subject of the manual:

- Table of Contents
- Theory of Operation, functional diagrams
- Design and Operating Specifications, criteria
- Recommended installation arrangement, locations, wiring, criteria, procedure, etc.
- Normal and emergency operating instructions, procedures and sequences for each possible mode of operation
- Normal operating parameters, indications, settings, adjustments, voltages, currents, etc.
- Troubleshooting procedures
- Preventative or routine maintenance requirements or recommendations
- Lubrication schedules, including lube points, frequency, quantity and type and brand name of recommended lubricants
- Parts layout, identification, assembly diagrams, including exploded views with parts referenced by name and/or number
- Parts lists of each assembly and subassembly showing part name, number, size, composition and quantity required, down to discrete components
- Recommended spare parts stocking lists

GENERAL SPECIFICATIONS

- Name, addresses and telephone numbers of factory authorized or recommended service representatives and parts suppliers
- Major overhaul or repair procedures including diagrams, measurements, clearances, tolerances, adjustment settings, alignment procedures, torque specs, etc.
- Wiring diagrams and schematics
- Elementary control diagrams
- One-line diagrams
- Interconnection data or diagrams for factory-wired components
- Alignment and calibration procedures, including original or factory settings and data
- Recommended or required special tools and maintenance, alignment, calibration or safety equipment
- Care and cleaning of finishes and paints used, colors, types
- Any other information necessary or recommended for the complete and proper operation, maintenance and repair of the equipment by the Owner's personnel

Where any item of equipment includes components or subassemblies manufactured by other than the equipment manufacturer, all pertinent information for the subassemblies shall be included in the equipment manual prepared and compiled by the equipment manufacturer.

Information contained in an equipment manual which is not applicable to the specified item furnished under this Contract shall be clearly lined out or deleted.

Providing complete equipment manuals, as specified herein, for all equipment, devices or materials furnished under the Contract is a part of the work of this Contract and the Contractor is wholly responsible for obtaining acceptable equipment manuals from the equipment manufacturers and submitting them to the Engineer. Seven (7) copies of each equipment manual shall be submitted to the Engineer by the Contractor, which shall be transmitted to the Owner by the Engineer. If the O&M manuals are not approved in the first submittal, the Owner and Engineer will retain three (3) copies for future reference of revised submittals. O&M manuals shall be provided to the County by the sixty percent (60%) project completion milestone. In order to be acceptable, each copy of each equipment manual must be complete, as specified herein, legible ,clearly reproduced, and appropriately partitioned by subject matter.

Over and above and in addition to any other retainages provided for in the Contract, ten percent (10%) of the value of equipment, devices or materials requiring equipment manuals shall be retained from payments otherwise due the Contractor until acceptable equipment manuals for the applicable items are received by the Owner. For the purpose of applying this retainage, equipment, device or material values shall be determined from actual invoices presented by the Contractor to the Engineer, or, in the absence of actual invoices, by an estimate of fair and reasonable value determined by the Engineer. The Contractor is advised to include this specification, entitled "Equipment Manufacturers' Manuals and Information," in

all applicable purchase orders and to provide a similar retainage provision in all applicable purchase orders or purchase agreements.

Equipment manuals shall be submitted by the Contractor for review under cover of a fully and accurately completed "Equipment Manual Transmittal" form, as included as an appendix to the General Specifications. Information submitted to satisfy the requirements or an equipment manual will not be accepted for review by the Owner if it is not accompanied by a fully completed Equipment Manual Transmittal.

The Contractor shall provide each approved O&M manual in electronic (650 MB CD-RW) Adobe PDF format.

S-039. Services of Manufacturer's Factory Representatives - Startup and Training.

The services of manufacturer's factory representatives shall be provided by the Contractor at the times and for the duration and purposes stated in the various equipment specification sections and/or Special Project Conditions. The factory representatives provided shall be trained and fully qualified and capable of performing the services required. Factory representatives shall arrive at the site with all tools, instruments, equipment, documentation or other materials necessary to perform the required services.

Time spent in travel to the site shall not be applied toward the required duration of service. Time spent at the site if not properly prepared or equipped to perform the required service shall not be applied toward meeting the specified durations. For installation, initial operation, testing, startup and adjustment services, the durations shown in the equipment specification sections shall be considered minimums. Additional on-site time shall be provided at the Contractor's expense as necessary to assure that equipment is installed and operating correctly and in accordance with the specifications.

The Owner's personnel shall have the right to witness the activities of factory representatives during installation, testing, startup and adjustment. Furthermore, the Owner reserves the right to video tape, at its expense, the on-site activities of factory representatives, including training. Neither the Contractor nor the equipment supplier or manufacturer shall be entitled to any additional compensation as a result of the Owner's video taping. It is understood that video taping, if performed, will be strictly for the Owner's use in training its employees and that the video tapes will not be made available by the Owner to any other party. The Owner will provide duplicate videotapes of representatives' activities, if requested by the respective supplier or manufacturer and at the supplier or manufacturer's expense.

Manufacturer's services for instruction and/or training of Owner's personnel shall be provided as specified in the various equipment specification sections and/or Special Conditions. The specified durations for training shall be over and above the time spent at the site for any other purposes. As noted above, time spent in travel shall not be applied toward the required duration of service.

At least two weeks prior to proposed training, the Contractor shall submit for the Owner's review and approval a training outline or lesson plan clearly indicating the subject matter duration of each segment and depth of detail proposed to be presented at the training session. No training shall be performed in the absence of a previously approved lesson plan or outline. Prior to scheduling training sessions, any and all equipment manuals, as specified elsewhere, shall be submitted to and approved by Owner. No training shall be performed in the absence of previously approved equipment manuals. Training which is provided that does not follow approved lesson plans or outlines, or where the

manufacturer's representative is not properly prepared or qualified shall not be accepted by the Owner as meeting the training requirements.

Training shall be scheduled at least two (2) weeks in advance so as to provide the Owner an opportunity to adjust work schedules to permit all interested personnel to attend. If applicable to the particular training to be provided, the Owner can make its training room facilities available.

The Owner reserves the right to video tape all training sessions, as noted above.

S-040. Beneficial Occupancy of Operating Equipment and Systems.

A. Conditions for Beneficial Occupancy

As stated in General Provisions Section G-6.07.B.2, equipment or operating systems will not be considered for use under beneficial occupancy until all of the following conditions have been successfully and completely met for the particular equipment or system:

1. A written Startup Report from the equipment manufacturer's authorized representative has been submitted to the Owner, certifying that the equipment has been properly installed, started, tested, adjusted, is performing in accordance with specified requirements and is ready for regular service. The Startup Report shall include measured operating parameters applicable to the equipment, such as current draw per phase, pressure, RPM, flow, temperature, etc.

2. All related control, alarm and telemetry systems are in place and functioning reliably.

3. Painting and labeling of equipment, piping, conduits, wiring and related devices have been acceptably completed.

4. The equipment area has been acceptably cleaned and all rubbish and debris removed.

5. Acceptable means have been provided for safe and efficient access to the equipment by the Owner's personnel for operation and maintenance, and all required environmental and housekeeping facilities are available (e.g., weather protection, ventilation, heat, light, water for washdown, alarms, platforms, ladders, etc.).

6. Record drawing information and electrical interconnection data submitted and approved.

7. Equipment manuals in the required number of copies submitted and approved, including electronic manuals and information

8. Training of the Owner's personnel acceptably completed.

9. All required spare parts, tools and accessories turned over to the Owner. They shall be properly packaged and identified in individual packaging with typed labels indication building and location, descriptive equipment name, manufacturer, model serial numbers, part numbers, part names, and quantity.

10. The equipment performance period has been successfully completed.

GENERAL SPECIFICATIONS

11. All warranties and guarantees transferred to the Owner.

12. Approved code inspection reports, as applicable.

13. At the time of Beneficial Occupancy of any facility by the Owner, where utility service is required (electrical, gas, water, telephone, etc.) all temporary services instituted and necessary to the Contractor's operation shall be terminated and all outstanding bills paid by the Contractor to the applicable utility.

B. Equipment Performance Period

Unless otherwise specified in the Special Conditions or the Technical Specifications, each and every item of equipment shall be operated in service without failure for a "performance period" of fourteen (14) calendar days, as a condition for beneficial occupancy or substantial completion. For items of equipment which are part of a system, all items of equipment in the system, including items furnished by other prime Contractors, must undergo the performance period simultaneously.

1. The performance period may not be commenced until after items A.1, A.2 and A.3 above have been completed.

2. The performance period shall be at least fourteen (14) days (or as otherwise specified) of continuous operation of the equipment or system without failure to perform or interruption due to equipment malfunction of any kind. For equipment, such as pumps, that may normally cycle on and off while in service, or equipment which is only utilized for parts of a day in normal service, the performance period is the overall in-service time, including normal off cycles.

3. If an item of equipment fails for any reason during the performance period, or fails to perform in accordance with the specifications during the performance period, the performance period shall start over from "zero" upon the Contractor correcting the problem.

4. Unless specified in the Special Project Conditions, or previously agreed otherwise, the Contractor shall be responsible for all operation and preventive, routine and corrective maintenance of equipment during the performance period, including responding to any alarms or failures during both normal working and non-working hours, 24 hours per day, seven days per week. If an item of equipment or a system develops a problem or fails during the performance period, the Contractor's designated representative will be notified by the Owner's Representative or Owner's operating personnel, and the Contractor shall immediately respond, troubleshoot and correct the problem or switch to a backup. The Contractor shall provide a legible, detailed, daily maintenance and operation log for all operating equipment, from the time the equipment is operational until Beneficial Occupancy. Documented data shall include date, equipment description, model number, serial number, hours of operation, and maintenance schedule. Logs shall be made available for the Owners and Engineers review. If, in the opinion of the Owner, the Contractor fails to respond in a timely and effective manner, and if such failure may damage other equipment or the facility or adversely affect the treatment process or service to the public, the Owner's personnel may respond and take necessary corrective action. The cost to the Owner of any such response and action shall be deducted from monies otherwise due the Contractor. However, the Owner shall not be

obligated to respond, and such response or non-response by the Owner shall not relieve the Contractor from liability for damage to public or private property caused by an equipment failure during the performance period, or for making permanent repairs or corrections to the failed equipment. The Contractor shall not have nor make any claim against the Owner for actual or alleged damages to the equipment, the facility or public or private property due to the Owner's response or action or failure to respond or act.

5. The cost of utilities consumed during the performance period shall be borne by the Owner. The disposal of process related material, such as residuals or sludge, collected or generated during the performance period shall be by the Owner. Fuel, lubricants parts and chemicals used during the performance period shall be provided by the Contractor, unless otherwise specified or agreed to in advance.

6. When items A.4 through A.13 above have been successfully completed, and the specified performance period has been successfully completed, the designated equipment or system will be taken under beneficial occupancy by the Owner. At that time, the Owner's Representative will issue a Notice of Beneficial Occupancy, the Owner will assume full operation and maintenance responsibility for the equipment, and the guarantee period for that equipment will begin.

C. Notwithstanding the above procedures for beneficial occupancy, the Owner shall not be obligated to take beneficial occupancy of any item of equipment or system, unless scheduled in the Special Conditions, until all the work of the Contract is substantially complete. To achieve substantial completion, all of the conditions for beneficial occupancy must be satisfied.

S-041. Temporary Construction Fencing.

The Contractor shall install and maintain, as necessary, temporary construction fencing to delineate construction areas from public usage areas for safety purposes. Temporary construction fencing shall be installed at any and all locations where it is necessary to restrict public access to the work area, storage and field office trailer areas, and any other potential hazards for safety reasons. Such fencing shall be 6-foot high metallic chain link, with posts and supports such to maintain fence in a vertical position without sagging. Fence shall be in place, complete and secured, prior to adjacent construction activity and shall be maintained throughout the work. The fence shall be removed when adjacent work has been completed.

S-042. Storage of Flammable or Explosive Materials On-Site.

In no case shall the Contractor store any flammable or explosive materials at the project site, in excess of materials needed for work to be undertaken during the current working day. At the end of the working day, all such materials shall be removed from the project site and secured at an off-site location.

APPENDIX A

Equipment Manual Transmittal Form

Electrical Interconnection Data Form

Substitution Procedures and Application Form

Technical Specification
For
Project Sign

LAKE IMPROVEMENT PROJECT OFFICE
650 Hiawatha Boulevard West • Syracuse, New York 13204-1194
315/435-2260 Phone • 315/435-5023 FAX

JOANNE M. MAHONEY, *County Executiveive*
PATRICIA M. PASTELLA, P.E., BCEE, *Commissioner*

EQUIPMENT MANUAL TRANSMITTAL

PART A

1. Contract No._____Name_____
2. Contractor _____
3. ☐ This is a shop drawing submitted to satisfy the requirements of an Equipment Manual
4. ☐ This is an Equipment Manual
5. ☐ This is a resubmittal of information previously submitted and rejected.
6. Item of equipment _____
7. Manufacturer's Name_____
8. Manufacturer's Model No. _____
9. Vendor's or Sales Rep's Name_____
10. Specification Section Reference_____
11. ☐ *This submittal describes a complete system, including all component parts, subassemblies and remotely located items which are part of the system, including items manufactured by others.*
12. ☐ *This submittal describes a component part or subassembly of larger piece of equipment or system, the name of which is* _____ (Name of System)

PART B

1. Submitted by _____ (Contractor) to _____ (Project Manager) on _____ (Date)
2. Submitted by Project Manager to Consultant on _____ (Name - Date)
3. Submitted by Project Manager to _____ (County Engineering) on _____ (Date)

4. Submitted by Engineering to _____ on _____
(Operating Section) (Date)

5. Submitted by Engineering to _____ on _____
(I/E) (Date)

PART C

1. Returned to Engineering by Opns _____ OK AS IS RESUBMIT
(Name – Date)

2. Returned to Engineering by I/E _____ OK AS IS RESUBMIT
(Name – Date)

3. Returned to Engineering _____ OK AS IS RESUBMIT
(Consultant - Name – Date)

4. Returned to Project Manager by _____ OK AS IS RESUBMIT
(County Engineering - Name – Date)

PART D

The following information is included in this submittal

		1	2	3	4	5
1	Subject item clearly identified					
2	Table of contents					
3	Theory of operation					
4	Design specifications criteria					
5	Installation recommendations					
6	Normal operating instructions					
7	Parameters, adjustments, etc.,					
8	Troubleshooting procedures					
9	Preventative maintenance requirements					
10	Lubrication requirements					
11	Parts layouts; assembly diagrams					
12	Parts lists keyed to diagrams					
13	Recommended spare parts lists					
14	Names, phone numbers of service reps, parts suppliers					
15	Major overhaul / repair procedures					
16	Detailed schematic wiring diagrams					
17	One-line diagrams					
18	Interconnection diagrams					
19	Calibration/alignment procedures					

		1	2	3	4	5
20	Subject item clearly identified					
21	Care and cleaning of finishes and paints used, colors, types					
22	Controls					
23	Nameplate data included					
24	All information is legible					
25	Appropriately bound					
26	Non-applicable information or items lined-out					
27	Other (give details below)					

Code: √ Present And Acceptable
0 Present But Not Acceptable
NA – Not Applicable/Not Required
M – Missing and Required

Persons Attesting to (Name & Date)

Column 1 (Contractor)_____

Column 2 (Consultant)_____

Column 3 (County Engineering)_____

Column 4 (County Operations)_____

Column 5 (County I/E)_____

Notes and Comments:

ONONDA COUNTY
LAKE IMPROVEMENT PROJECT OFFICE
650 HIAWATHA BOULEVARD, WEST
SYRACUSE, NEW YORK 13204-1194
(315) 435-2260

ELECTRICAL INTERCONNECTION DATA

EQUIPMENT/DEVICE/ENCLOSURE DESCRIPTION: _____ LOCATION: _____

PROJECT: _____ CONTRACTOR: _____

PREPARED BY (NAME): _____ FIELD CHECKED BY (NAME & DATE): _____ WEP REVIEWED (NAME & DATE): _____

APPROVED & ACCEPTED (DATE): _____

This Equipment/Device					Intermediate Devices, Junction Boxes, Etc.	Destination			Remarks
Equipment Termination		Field Termination		Conduit		Conduit	Equipment or Device	Equipment	
Function	Term No.	Term No.	Color	Out	Locations, Term No's, Function	In	and Location	Term No.	

SUBSTITUTIONS

A. The Engineer will consider requests for Substitutes or "Or Equal" items after the Effective Date of the Owner-Contractor Agreement, and then, only within acceptable time constraints.

B. Document each request with complete data substantiating compliance of proposed Substitution with Contract Documents.

C. A request constitutes a representation that the Contractor:

1. Has investigated proposed product and determined that it meets or exceeds the quality level of the specified product.
2. Will provide the same warranty for the Substitution as for specified product.
3. Will coordinate installation and make changes to other Work, which may be required for the Work to be complete with no additional cost to the Owner.
4. Waives claims for additional costs for time extension, which may subsequently become apparent.
5. Will reimburse Owner the costs incurred by Owner for the review or redesign services by the Engineer, and for review by authorities when re-approval is required, if Engineer determines that the item of material or equipment proposed by the Contractor is a Substitute Item.

D. Substitutions will not be considered when they are indicated or implied on a shop drawing or product data submittals without separate written request, or when acceptance will require revision to the Contract Documents.

E. Substitution Submittal Procedure:

1. Submit three (3) copies of Request for Substitution for consideration. Limit each request to one (1) proposed Substitution. Use Application for Substitute Item Form attached to this specification.
2. Submit shop drawings, product data, and certified test results attesting to the proposed product equivalence.
3. The Engineer will notify Contractor, in writing, of decision to accept or reject request.

APPLICATION FOR SUBSTITUTE ITEM

Project Name: _____

Project No: _____ Contract No: _____

I. In accordance with General Specification S-017, the following Product is submitted for consideration as a Substitution for the specified item:

Section: _____ Paragraph: _____

Specified Item: _____

Proposed Substitute: _____

II. INSTRUCTIONS:

a. Attach complete dimensional information and technical data, including laboratory tests, if applicable.
b. Include complete information on changes to drawings and/or specifications which proposed Substitution will require for its proper installation.
c. Submit with request all necessary samples and substantiating data that proposed Substitution will provide equal quality, performance and appearance to that which is specified. Clearly mark manufacturer's literature to indicate equality in performance. Differences in quality of materials and construction shall also be indicated.
d. Attach an itemized estimate of all costs or credits that will result directly or indirectly from acceptance of the proposed Substitution.

III. The undersigned states that the following paragraphs, unless modified on attachments, are correct:

a. The proposed Substitution does not affect dimensions shown on Drawings.
b. The undersigned shall reimburse Owner the costs incurred by Owner for the review or redesign services by the Engineer, and for review by authorities when re-approval is required, if Engineer determines that the item of material or equipment proposed by the Contractor is a Substitute Item. Moreover, the undersigned will pay for changes to the project's design, including engineering design, detailing, and construction costs caused by the proposed Substitution.
c. The proposed Substitution will have no adverse effect on other prime contracts, the construction schedule, or specified warranty requirements. License fees and royalties, if any, will be paid by the undersigned.

d. Maintenance and service parts will be locally available for the proposed Substitution.
e. The proposed Substitution will have no effect on applicable codes.
f. The manufacturer's guarantees or warranties of proposed product are equivalent to, or exceed, that of the specified item.

IV. List of names and location of three similar projects on which proposed product was used, date of installation, and Engineer's name and phone number.

Name/Location	Date of Installation	Engineer's Name/ Phone No.

* * * * *

CERTIFICATION

The undersigned certifies that the proposed Substitution will meet or exceed the performance requirements of the specified item and that its basic function and quality are equal or superior to the specified item.

SUBMITTED BY

_____ _____
(Signature) (Date)

_____ _____
(Typed Name) (Title)

_____ _____
(Company Name) (Phone)

_____
(Company Address)

SECTION 01323

COLOR AUDIO-VIDEO PRE-CONSTRUCTION RECORDS

PART 1 GENERAL

1.01 DESCRIPTION

A. Audio/Video DVD's of all work areas in the Contract shall be prepared by the Contractor.

B. Contractor to Prepare Audio/Video Recording - Prior to commencing work, the Contractor shall have a continuous color audio/video recording taken along the entire length of the Project including all area within the limits of construction and the interior and exterior of structures identified in the schedule in Part 3.01 of this Section. Streets, easements, rights-of way, lots or construction sites within the Project must be recorded to serve as a record of pre-construction conditions. One copy of recordings and video log shall be submitted to the Engineer. All DVD's and written records shall become property of the Owner.

C. Scheduling of Audio/Video Recording - No construction shall begin prior to review and approval of the recordings by the Engineer. The Engineer shall have the authority to reject all or any portion of a recording not conforming to specifications and order that it be redone at no additional charge. The Contractor shall reschedule unacceptable coverage within seven days after being notified. Recordings shall not be made more than 30 days prior to construction in any area.

D. Professional Videographers - The Contractor shall engage the services of a professional videographer known to be skilled and regularly engaged in the business of preconstruction color audio-video documentation. The videographer through the Contractor shall furnish to the Engineer a list of all equipment to be used for the audio-video recording, i.e., manufacturer's name, model number, specifications and other pertinent information.

E. Additional information to be furnished by the videographer is the names and addresses of two references that the videographer has performed color

audio-video taping for on projects of a similar nature within the last 12 months. Engineer's approval of the selected videographer is required prior to taking first audio-video recording.

F. Equipment - All equipment, accessories, materials and labor to perform this service shall be finished by the Contractor. The total audio-video system shall reproduce bright, sharp, clear pictures with accurate colors and shall be free from distortion, tearing, rolls or any other form of imperfection. The audio portion of the recording shall reproduce the commentary of the camera operator with proper volume, clarity and be free from distortion and interruptions. In some instances, audio-video coverage may be required in areas not accessible by conventional wheeled vehicles. Such coverage shall be obtained by walking. The color video camera used in the recording shall be of Industrial Grade and shall have EIA Standard NTSC type color - 1.0V 75 OHMS. Video output from camera shall be capable of horizontal resolution of 350 lines at center and utilize a minimum of 8:1 zoom with a 2/3" Newvicon tube or CCD pick-up element for optimum color imagery plus minimum lag through of one foot candle. The recording shall be transferred to DVD's compatible for playback with any Region 1 American TV Standard DVD player.

G. Recorded Information, Audio - Each recording shall begin with the current date, project name and be followed by the general location, i.e., viewing side and direction of progress. Accompanying the video recording shall be a corresponding and simultaneously recorded audio recording. This audio recording, exclusively containing the commentary of the camera operator or aide, shall assist in viewer orientation and in any needed identification, differentiation, clarification, or objective description of the features being shown in the video portion of the recording. The audio recording shall also be free from any conversations.

H. Recorded Information, Video - All video recordings must continuously display transparent digital information to include the date and time of recording. The date information shall contain the month, day and year. The time information shall contain the hour, minutes and seconds. Additional information shall be displayed periodically. Such information shall

include, but not be limited to, project name, contract number, direction of travel and the viewing side. This transparent information shall appear on the extreme upper left hand third of the screen. Camera pan, tilt, zoom-in and zoom-out rates shall be sufficiently controlled such that recorded objects will be clearly viewed during video playback. In addition, all other camera and recording system controls, such as lens focus and aperture, video level, pedestal, chrome, white balance, and electrical focus shall be properly controlled or adjusted to maximize picture quality.

I. Viewer Orientation - The audio and video portions of the recording shall maintain viewer orientation. To this end, overall establishing views of all visible house and business addresses shall be utilized. In areas where the proposed construction location will not be readily apparent to the video viewer, highly visible yellow flags shall be placed, by the Contractor, in such a fashion as to clearly indicate the proposed centerline of construction. When conventional wheeled vehicles are used as conveyances for the recording system, the vertical distance between the camera lens and the ground shall not exceed 10 feet. The camera shall be firmly mounted such that transport of the camera during the recording process will not cause an unsteady picture.

J. Lighting - All taping shall be done during time of good visibility. No taping shall be done during precipitation, mist or fog. The recording shall only be done when sufficient sunlight is present to properly illuminate the subjects of recording and to produce bright, sharp video recordings of those subjects.

K. Speed of Travel - The average rate of travel during a particular segment of coverage shall be directly proportional to the number, size and value of the surface features within that construction limits. The rate of speed in the general direction of travel of the vehicle used during taping shall not exceed 44 feet per minute.

L. Video Log/Index - All DVD's shall be permanently labeled and shall be properly identified by number and project title. Each DVD shall have a log of its contents. The log shall describe the various segments

of coverage contained on the DVD in terms of the names of the streets or location of easements, coverage beginning and end, directions of coverage, video unit counter numbers, survey or coordinate values (if reasonably available) and the date.

M. Area of Coverage - Recording coverage shall include all surface features located within the zone of influence of construction supported by appropriate audio coverage. Such coverage shall include, but not be limited to, existing driveways, sidewalks, curbs, pavements, bridge decks and abutments, drainage system features, mailboxes, landscaping, culverts, fences, signs, Contractor staging areas, adjacent structures, etc. within the limits of construction and the interior and exterior of structures identified in Part 3.01 of this Section. Of particular concern shall be the existence of any faults, fractures, or defects. Coverage shall be limited to one side of the site, street, easement or right-of-way at any one time.

PART 2 - PRODUCTS (NOT USED)

PART 3 - EXECUTION

3.01 SCHEDULE OF BUILDINGS TO BE AUDIO/VIDEO RECORDED

Building Address	Reputed Owner
107 Dearborn Place	Mitchell III, Floyd
108 Dearborn Place & West Castle Street	Acker, Erinn T.
110 Dearborn Place	Deshazior, Emma
615-617 West Castle Street	Dunham, Clarence E.
805 South Avenue & West Castle Street	Syracuse Model Neighborhood Corp.
806 South Avenue	Naples, Ronald Salvador
807-809 South Avenue	Dunham, Clarence E.
411 Hudson Street	Francois, Joelle M.
415 Hudson Street	Finch, Pauline M.

END OF SECTION

SECTION 01500

TEMPORARY FACILITIES AND CONTROLS

PART 1 GENERAL

1.01 SUMMARY

A. This Section includes requirements for temporary facilities and controls throughout the project limits and/or as required by the Contract Documents.

B. The Contractor is responsible for providing the necessary field office facilities for use by their personnel. Field office facilities shall be located as shown on the Contract Drawings and in coordination with the Engineer. The Contractor is responsible for furnishing, maintenance, and upkeep of their respective field offices. The Contractor is responsible for his own telephone service installation and use charges. The Contractor shall provide for waste collection and disposal in accordance with Section 3.03.F of this Section and the General Specifications.

C. Temporary utilities include, but are not limited to, the following:

1. Sewers and drainage.
2. Water service and distribution.
3. Sanitary facilities, including toilets, wash facilities, and drinking-water facilities.
4. Heating and cooling facilities.
5. Ventilation.
6. Electric power service.
7. Lighting.
8. Telephone service.

D. Support facilities include, but are not limited to, the following:

1. Temporary roads and paving.
2. Dewatering facilities and drains.
3. Project identification and temporary signs.
4. Waste disposal facilities.
5. Field offices.
6. Storage and fabrication sheds.
7. Lifts and hoists.

8. Temporary stairs.
9. Construction aids and miscellaneous services and facilities.

E. Security and protection facilities include, but are not limited to, the following:

1. Environmental protection.
2. Tree and plant protection.
3. Dust control.
4. Pest control.
5. Temporary security fence.
6. Security enclosure and lockup.
7. Barricades, warning signs, and lights.
8. Temporary enclosures.
9. Temporary partitions.
10. Fire protection.

1.02 USE CHARGES

A. General: Cost or use charges for temporary facilities which are not chargeable to Owner, as specified in the General Specifications, shall be included in the Contract Sum. Allow other entities to use temporary services and facilities without cost including, but not limited to, the following:

1. Engineer and construction forces.
2. Occupants of Project.
3. Testing agencies.
4. Personnel of authorities having jurisdiction.

1.03 REFERENCES

A. Material and installation shall be in accordance with the latest revision of the following codes, standards, and specifications, except where more stringent requirements have been specified herein.

1. American National Standards Institute (ANSI).
2. National Electrical Manufacturers Association (NEMA).
3. Underwriters Laboratories, Inc. (UL).
4. National Electricity Code Administrator (NECA).
5. National Fire Protection Association (NFPA).
6. New York State Uniform Fire Prevention and Building Code (NYSUFPBC).
7. Occupational Safety and Health Administration (OSHA).

1.04 SUBMITTALS

A. Submittals shall be in accordance with the provisions set forth in the Special Project Conditions, General Provisions, and General Specifications.

B. Temporary Utility Reports: Submit reports of tests, inspections, meter readings, and similar procedures performed on temporary utilities.

C. Implementation and Termination Schedule: Within 15 days of date established for submittal of Contractor's Construction Schedule, submit a schedule indicating implementation and termination of each temporary utility.

D. Waste Management Plan: Submit a Waste Management Plan in accordance with Part 3.03 F of this Section.

1.05 QUALITY ASSURANCE

A. Standards: Comply with ANSI A10.6, NECA's "Temporary Electrical Facilities," and NFPA 241.

1. Trade Jurisdictions: Assigned responsibilities for installation and operation of temporary utilities are not intended to interfere with trade regulations and union jurisdictions.

2. Electric Service: Comply with NECA, NEMA, and UL standards and regulations for temporary electric service. Install service to comply with NFPA 70 and local electric utility.

B. Tests and Inspections: Arrange for authorities having jurisdiction to test and inspect each temporary utility before use. Obtain required certifications and permits as necessary.

1.06 PROJECT CONDITIONS

A. Temporary Utilities: At earliest feasible time, when acceptable to Engineer, change over from use of temporary service to use of permanent service.

1. Temporary Use of Permanent Facilities: The Contractor shall assume responsibility for operation, maintenance, and protection of each permanent service during its use as a

construction facility before Owner's acceptance, regardless of previously assigned responsibilities.

B. Conditions of Use: The following conditions shall apply to use of temporary services and facilities by all parties engaged in the Work:

1. Keep temporary services and facilities clean and neat.

2. Relocate temporary services and facilities as required by progress of the Work.

3. All temporary facilities shall be maintained and provided in accordance with the Contract Documents.

PART 2 PRODUCTS

2.01 MATERIALS

A. General: Provide new materials. Undamaged, previously used materials in serviceable condition may be used if approved by Engineer. Provide materials suitable for use intended.

B. Pavement: Pavement materials shall be in compliance with related Sections in Division 2 - Sitework.

C. Temporary Chain-Link Fencing: Minimum 2-inch, 0.148-inch-thick, galvanized steel, chain-link fabric fencing; minimum 8 feet high with galvanized steel pipe posts; minimum 2-3/8-inch OD line posts and 2-7/8-inch OD corner and pull posts.

D. Lumber and Plywood: Lumber and plywood materials shall be in compliance with related Sections in Division 6 - Wood and Plastic.

E. Roofing: Standard-weight, mineral-surfaced, asphalt shingles or asphalt-impregnated and -coated, mineral-surfaced, roll-roofing sheet.

F. Gypsum Board: Minimum 1/2-inch-thick by 48 inches wide by maximum available lengths; regular-type panels with tapered edges. Comply with ASTM C 36.

G. Insulation: Unfaced, mineral-fiber blanket manufactured from glass, slag wool, or rock wool; with maximum flame-spread and smoke-developed indices of 25 and 50, respectively.

H. Paint: Painting materials shall be in compliance with related Sections in Division 9 - Finishes.

I. Tarpaulins: Fire-resistive labeled with flame-spread rating of 15 or less.

J. Water: Potable and/or non-potable.

K. All polyethylene materials shall be fire-retardant and be in accordance with NFPA 701 flame resistance requirements.

2.02 EQUIPMENT

A. General: Provide equipment suitable for use intended.

B. Field Offices: Prefabricated, mobile units, with lockable entrances, operable windows, and serviceable finishes; heated and air conditioned; on foundations adequate for normal loading. See Section 01510, Engineer's Field Office, for requirements regarding the Engineer's field office.

C. Fire Extinguishers: Hand carried, portable, UL rated. Provide class and extinguishing agent as indicated or a combination of extinguishers of NFPA-recommended classes for exposures.

1. Comply with NFPA 10 and NFPA 241 for classification, extinguishing agent, and size required by location and class of fire exposure.

D. Self-Contained Toilet Units: Single-occupant units of chemical, aerated recirculation, or combustion type; vented; fully enclosed with a glass-fiber-reinforced polyester shell or similar nonabsorbent material.

E. Drinking-Water Fixtures: Containerized, tap-dispenser, bottled-water, drinking-water units, including paper cup supply.

1. Where power is accessible, provide electric water coolers to maintain dispensed water temperature at 45 to 55 deg F (7.2 to 12.7 deg C).

F. Heating Equipment: Unless Owner authorizes use of permanent heating system, provide vented, self-contained, liquid-propane-gas or fuel-oil heaters with individual space thermostatic control.

1. Use of gasoline-burning space heaters, open-flame heaters, or salamander-type heating units is prohibited.

2. Heating Units: Listed and labeled, by a testing agency acceptable to authorities having jurisdiction, and marked for intended use for type of fuel being consumed.

G. Electrical Outlets: Properly configured, NEMA-polarized outlets to prevent insertion of 110- to 120-V plugs into higher-voltage outlets; equipped with ground-fault circuit interrupters, reset button, and pilot light.

H. Power Distribution System Circuits: Where permitted and overhead and exposed for surveillance, wiring circuits, not exceeding 125-V ac, 20-A rating, and lighting circuits may be nonmetallic sheathed cable.

PART 3 EXECUTION

3.01 INSTALLATION, GENERAL

A. Locate facilities as shown on the Contract Drawings and/or where they will serve the Work adequately and result in minimum interference with performance of the Work. Relocate and modify facilities as required.

B. Provide each facility ready for use when needed to avoid delay. Maintain and modify as required. Do not remove until facilities are no longer needed or are replaced by authorized use of completed permanent facilities.

3.02 TEMPORARY UTILITY INSTALLATION

A. General: Engage appropriate local utility company to install temporary service or connect to existing service. Where utility company provides only part of the service, provide the remainder with matching, compatible materials and equipment. Comply with utility company recommendations and all applicable codes and standards.

1. Arrange with utility company, Owner, and existing users for time when service can be interrupted, if necessary, to make connections for temporary services.

2. Provide adequate capacity at each stage of construction. Before temporary utility is available, provide trucked-in services.

3. Obtain easements to bring temporary utilities to Project site where Owner's easements cannot be used for that purpose.

B. Sewers and Drainage: If sewers are available, provide temporary connections to remove effluent that can be discharged lawfully. If neither sewers nor drainage facilities can be lawfully used for discharge of effluent, provide containers to remove and dispose of effluent off-site in a lawful manner.

1. Filter out excessive soil, construction debris, chemicals, oils, and similar contaminants that might clog sewers or pollute waterways before discharge.

2. Connect temporary sewers to municipal system as directed by sewer department officials.

3. Maintain temporary sewers and drainage facilities in a clean, sanitary condition. After heavy use, restore normal conditions promptly.

C. Water Service: Install water service and distribution piping in sizes and pressures adequate for construction until permanent water service is in use. Sterilize temporary water piping before use.

D. Sanitary Facilities: Provide temporary toilets, wash facilities, and drinking-water fixtures. Comply with regulations and health codes for type, number, location, operation, and maintenance of fixtures and facilities.

1. Disposable Supplies: Provide toilet tissue, paper towels, paper cups, and similar disposable materials for each facility. Maintain adequate supply. Provide covered waste containers for disposal of used material.

2. Toilets: Install self-contained toilet units. Shield toilets to ensure privacy. Provide separate facilities for male and female personnel.

3. Wash Facilities: Install wash facilities supplied with potable water at convenient locations for personnel who handle materials that require wash up. Dispose of drainage properly. Supply cleaning compounds appropriate for each type of material handled.

   a. Provide safety showers, eyewash fountains, and similar facilities for convenience, safety, and sanitation of personnel as required by applicable codes and standards.

4. Drinking-Water Facilities: Provide bottled-water, drinking-water units.

5. Locate toilets and drinking-water fixtures so personnel need not walk more than two stories vertically or 200 feet horizontally to facilities.

E. Heating and Cooling: Provide temporary heating and cooling and maintain temperatures in accordance with the General Specifications. Select equipment that will not have a harmful effect on completed installations or elements being installed.

F. Ventilation and Humidity Control: Provide temporary ventilation in accordance with the General Specifications. Select equipment that will not have a harmful effect on completed installations or elements being installed. Coordinate ventilation requirements to produce ambient condition required and minimize energy consumption.

G. Electric Power Service: Provide weatherproof, grounded electric power service and distribution system of sufficient size, capacity, and power characteristics for use during construction period. Include meters, transformers, overload-protected disconnecting means, automatic ground-fault interrupters, and main distribution switchgear. All temporary electrical equipment and installations shall be in accordance with applicable codes, standards, and regulations.

H. Electric Distribution: Provide receptacle outlets adequate for connection of power tools and equipment.

1. Provide waterproof connectors to connect separate lengths of electrical power cords if single lengths will not reach areas where construction activities are in progress. Do not exceed safe length-voltage ratio.

2. Provide warning signs at power outlets other than 110 to 120 V.

3. Provide metal conduit, tubing, or metallic cable for wiring exposed to possible damage. Provide rigid steel conduits for wiring exposed on grades, floors, decks, or other traffic areas.

4. Provide metal conduit enclosures or boxes for wiring devices.

5. Provide 4-gang outlets, spaced so 100-foot extension cord can reach each area for power hand tools and task lighting. Provide a separate 125-V ac, 20-A circuit for each outlet.

I. Lighting: Provide temporary lighting with local switching that provides adequate illumination for construction operations and traffic conditions.

1. Install and operate temporary lighting that fulfills security and protection requirements without operating entire system.

2. Provide one 100-W incandescent lamp per 500 sq. ft., uniformly distributed, for general lighting, or equivalent illumination.

3. Provide one 100-W incandescent lamp every 50 feet in traffic areas.

4. Provide one 100-W incandescent lamp per story in stairways and ladder runs, located to illuminate each landing and flight.

5. Install exterior-yard site lighting that will provide adequate illumination for construction operations, traffic conditions, and signage visibility when the Work is being performed.

J. Telephone Service: Provide temporary telephone service throughout the construction period for the Engineer's field office, as indicated in Section 01510, common use facilities, and first aid stations.

1. At each telephone, post a list of important telephone numbers.

a. Police, fire, and ambulance services - call 911.
b. Poison control.
c. Contractor's home office.
d. Engineers' offices.
e. Owner's office.
f. Principal subcontractors' field and home offices.
g. Metro board, extension 202.

3.03 SUPPORT FACILITIES INSTALLATION

A. General: Comply with the following:

1. Locate Contractor field offices, storage sheds, sanitary facilities, and other temporary construction and support facilities for easy access.

2. Provide incombustible construction for offices, shops, and sheds located within construction area or within 30 feet of building lines. Comply with NFPA 241.

3. Maintain support facilities until near Substantial Completion. Remove before Substantial Completion. Personnel remaining after Substantial Completion will be permitted to use permanent facilities, under conditions acceptable to Owner.

B. Temporary Roads, Drives and Paved Areas: Construct and maintain (including snow plowing)temporary roads, drives and paved areas adequate to support loads and to withstand exposure to traffic during construction period as indicated on the Contract Drawings. Locate temporary roads and paved areas in same location as permanent roads and paved areas. Extend temporary roads and paved areas, within construction limits indicated, as necessary for construction operations.

1. Coordinate elevations of temporary roads and paved areas with permanent roads and paved areas.

2. Prepare subgrade and install subbase and base for temporary roads and paved areas according to Section 02300 - Earthwork.

3. Recondition base after temporary use, including removing contaminated material, regrading, proofrolling, compacting, and testing.

4. Delay installation of final course of permanent hot-mix asphalt pavement until immediately before Substantial Completion. Repair hot-mix asphalt base-course pavement before installation of final course according to Section 02721 - Paving and Surfacing.

C. Traffic Controls: Provide temporary traffic controls at junction of temporary roads with public roads. Include warning signs for public traffic and "STOP" signs for entrance onto public roads. Comply with requirements of authorities having jurisdiction.

D. Dewatering Facilities and Drains: Comply with requirements in applicable Sections for temporary drainage and dewatering facilities and operations not directly associated with construction activities included in individual Sections. Where feasible, use same facilities. Maintain Project site, excavations, and construction free of water.

1. Dispose of rainwater runoff in a lawful manner that will not result in flooding Project or adjoining property nor endanger permanent Work or temporary facilities.

2. Before connection and operation of permanent drainage piping system, provide temporary drainage where roofing or similar waterproof deck construction is completed.

3. Remove snow and ice as required to minimize accumulations.

E. Project Identification and Temporary Signs: Prepare Project identification and other signs in sizes indicated. Install signs where indicated to inform public and persons seeking entrance to Project. Do not permit installation of unauthorized signs.

1. Engage an experienced sign painter to apply graphics for Project identification signs. Comply with details indicated.

2. Prepare temporary signs to provide directional information to construction personnel and visitors.

3. Construct signs of exterior-type Grade B-B high-density concrete form overlay plywood in sizes and thicknesses indicated. Support on posts or framing of preservative-treated wood or steel.

4. Paint sign panel and applied graphics with exterior-grade alkyd gloss enamel over exterior primer.

5. The Contractor shall provide signs at every location where construction work is occurring requiring the use of hard hats, safety glasses, and safety shoes.

F. Waste Disposal Facilities: Provide waste-collection containers in sizes adequate to handle waste from construction operations. Containerize and clearly label hazardous, dangerous, or unsanitary waste materials separately from other waste.

1. The Contractor shall be required to provide separate containers, clearly labeled, for each type of waste material to be deposited.

2. Develop a waste management plan for Work performed on Project. Indicate types of waste materials Project will produce and estimate quantities of each type. Provide detailed information for on-site waste storage and separation of recyclable materials. Provide information on destination of each type of waste material and means to be used to dispose of all waste materials.

G. Janitorial Services: Provide janitorial services on a daily basis for temporary offices, first-aid stations, toilets, wash facilities, lunchrooms, and similar areas.

H. Storage and Fabrication Sheds: Provide sheds sized, furnished, and equipped to accommodate materials and equipment involved, including temporary utility services. Sheds may be open shelters or fully enclosed spaces within building or elsewhere on-site.

1. Construct framing, sheathing, and siding using fire-retardant-treated lumber and plywood.

2. Paint exposed lumber and plywood with exterior-grade acrylic-latex emulsion over exterior primer.

I. Lifts and Hoists: Provide facilities for hoisting materials and personnel. Truck cranes and similar devices used for hoisting materials are considered "tools and equipment" and not temporary facilities.

J. Temporary Stairs: Until permanent stairs are available, provide temporary stairs where ladders are not adequate. Cover finished, permanent stairs with protective covering of plywood or similar material so finishes will be undamaged at time of acceptance.

3.04 SECURITY AND PROTECTION FACILITIES INSTALLATION

A. Environmental Protection: Provide protection, operate temporary facilities, and conduct construction in ways and by methods that comply with environmental regulations and that minimize possible air, waterway, and subsoil contamination or pollution or other undesirable effects. Avoid using tools and equipment that produce harmful noise. Restrict use of noisemaking tools and equipment to hours that will minimize complaints from persons or firms near Project site.

B. Tree and Plant Protection: Install temporary fencing located as indicated or outside the drip line of trees to protect vegetation from construction damage. Protect tree root systems from damage, flooding, and erosion.

C. Pest Control: The Contractor shall retain a local exterminator or pest-control company to recommend practices to minimize attraction and harboring of rodents, roaches, and other pests. Engage this pest-control service to perform extermination and control procedures at regular intervals so Project will be free of pests and their residues at Substantial

Completion. Obtain extended warranty for Owner. Perform control operations lawfully, using environmentally safe materials. Refer to the Special Project Conditions for additional pest control requirements.

D. Temporary Security Fence: Before construction operations begin, install 8-foot high chain-link enclosure fence with lockable entrance gates. Locate where indicated on the Contract Drawings. Install in a manner that will prevent people, dogs, and other animals from easily entering site except by entrance gates.

E. Security Enclosure and Lockup: Install adequate temporary enclosure around partially completed areas of construction to protect from unauthorized access. Provide lockable entrances to prevent unauthorized entrance, vandalism, theft, and similar violations of security.

F. Barricades, Warning Signs, and Lights: Comply with standards and code requirements for erecting structurally adequate barricades. Paint with appropriate colors, graphics, and warning signs to inform personnel and public of possible hazard. Where appropriate and needed, provide lighting, including flashing red or amber lights.

1. For safety barriers, sidewalk bridges, and similar uses, provide minimum 5/8-inch- (16-mm-) thick exterior plywood.

G. Temporary Enclosures: Provide temporary enclosures for protection of construction, in progress and completed, from exposure, foul weather, other construction operations, and similar activities. Provide temporary weathertight enclosure for building exterior.

1. Where heating or cooling is needed and permanent enclosure is not complete, provide insulated temporary enclosures. Coordinate enclosure with ventilating and material drying or curing requirements to avoid dangerous conditions and effects.

2. Vertical Openings: Close openings of 25 sq. ft. or less with plywood or similar materials.

3. Horizontal Openings: Close openings in floor or roof decks and horizontal surfaces with load-bearing, wood-framed construction.

4. Install tarpaulins securely using fire-retardant-treated wood framing and other materials.

5. Where temporary wood or plywood enclosure exceeds 100 sq. ft. in area, use fire-retardant-treated material for framing and main sheathing.

H. Temporary Partitions: Erect and maintain dustproof partitions and temporary enclosures to limit dust and dirt migration and to separate areas from fumes and noise.

1. Construct dustproof partitions of not less than nominal 4-inch studs, 5/8-inch gypsum wallboard with joints taped on occupied side, and 1/2-inch fire-retardant plywood on construction side.

2. Construct dustproof, floor-to-ceiling partitions of not less than nominal 4-inch studs, 2 layers of fire-retardant 3-mil polyethylene sheets, inside and outside temporary enclosure. Cover floor with 2 layers of fire-retardant 3-mil polyethylene sheets, extending sheets 18 inches up the side walls. Overlap and tape full length of joints. Cover floor with 3/4-inch fire-retardant plywood.

a. Construct a vestibule and airlock at each entrance to temporary enclosure with not less than 48 inches between doors. Maintain water-dampened foot mats in vestibule.

3. Insulate partitions to provide noise protection to occupied areas.

4. Seal joints and perimeter. Equip partitions with dustproof doors and security locks.

5. Protect air-handling equipment.

6. Weatherstrip openings.

I. Temporary Fire Protection: Install and maintain temporary fire-protection facilities of types needed to protect against reasonably predictable and controllable fire losses. Comply with NFPA 241.

1. Provide fire extinguishers, installed on walls on mounting brackets, visible and accessible from space being served, with sign mounted above.

   a. Field Offices: 10-pound Class ABC dry-chemical extinguishers.

   b. Other Locations: 10-pound Class ABC dry-chemical extinguishers.

   c. Locate fire extinguishers where convenient and effective for their intended purpose; provide not less than one extinguisher on each floor at or near each usable stairwell or exit access. All fire extinguishers shall be located in compliance with NFPA.

2. Store combustible materials in containers in fire-safe locations.

3. Maintain unobstructed access to fire extinguishers, fire hydrants, temporary fire-protection facilities, stairways, and other access routes for firefighting. Prohibit smoking in hazardous fire-exposure areas.

4. Supervise welding operations, combustion-type temporary heating units, and similar sources of fire ignition. The Contractor shall obtain all necessary welding permits as required by the Engineer and/or County Fire Coordinator Office Representative.

5. Develop and supervise an overall fire-prevention and first-aid fire-protection program for personnel at Project site. Review needs with local fire department and establish procedures to be followed. Instruct personnel in methods and procedures. Post warnings and information.

J. Erosion and Sediment Control

1. Erosion and sediment control shall be installed and maintained by the Contractor in accordance with the New York State Guidelines for Urban Erosion and Sediment Control, the State Pollutant Discharge Elimination System (SPDES) General Permit for Storm Water Discharges from Construction Activities, and as specified in the Contract Documents.

2. All structural erosion and sediment control measures, dewatering activities, dust control, and stabilization shall be maintained in accordance with this Section and Section 02370 - Erosion and Sediment Control.

3. All waters which the Contractor pumps from excavations on this Project shall be routed to a temporary water treatment system, as necessary.

4. Activities on this Project may create dust from traffic and dry weather conditions. Dust control shall be provided to prevent dust throughout the project and as ordered by the Engineer. Dust control measures shall be in accordance with the Standard Specifications for Dust Control included in the New York State Standards and Specifications for Erosion and Sediment Control.

5. Stabilized construction entrances shall be provided at all construction site traffic entrance/exit points, as specified in the Standard Specifications For Stabilized Construction Entrance included in the New York Guidelines for Urban Erosion and Sediment Control. Stabilized construction entrances shall be provided, at a minimum, at the locations as indicated on the Contract Drawings. The Contractor's actual plans to enter and exit the construction site may require additional installations; these shall be provided as required to provide complete site access coverage, at no cost to the Owner.

6. Symbols if shown on the Contract Drawings are schematic only and do not precisely indicate locations of the stabilized construction entrances. These stabilized entrances shall be provided as close to paved-surface roadways as practicable.

3.05 OPERATION, TERMINATION, AND REMOVAL

A. Supervision: Enforce strict discipline in use of temporary facilities. To minimize waste and abuse, limit availability of temporary facilities to essential and intended uses.

B. Maintenance: Maintain facilities in good operating condition until removal. Protect from damage caused by freezing temperatures and similar elements.

1. Maintain operation of temporary enclosures, heating, cooling, humidity control, ventilation, and similar facilities on a 24-hour basis where required to achieve indicated results and to avoid possibility of damage.

2. Prevent water-filled piping from freezing. Maintain markers for underground lines. Protect from damage during excavation operations.

C. Termination and Removal: Remove each temporary facility at Substantial Completion. Complete or, if necessary, restore permanent construction that may have been delayed because of interference with temporary facility. Repair damaged Work, clean exposed surfaces, and replace construction that cannot be satisfactorily repaired.

1. Materials and facilities that constitute temporary facilities are the property of Contractor. Owner reserves right to take possession of Project identification signs.

2. Remove temporary paving not intended for or acceptable for integration into permanent paving. Where area is intended for landscape development, remove soil and aggregate fill that do not comply with requirements for fill or subsoil. Remove materials contaminated with road oil, asphalt and other petrochemical compounds, and other substances that might impair growth of plant materials or lawns. Repair or replace street paving, curbs, and sidewalks at temporary entrances, as required by authorities having jurisdiction.

3. At Substantial Completion, clean and renovate permanent facilities used during construction period.

END OF SECTION

SECTION 01501

PROJECT SIGN

PART 1 GENERAL

1.01 SUMMARY

A. This specification covers the fabrication and installation of a project identification sign.

PART 2 PRODUCTS

2.01 GENERAL

A. The project sign shall be fabricated and erected within 21 days following the Notice to Proceed and shall be maintained by the Contractor until completion of construction and the Owner's acceptance of the work.

B. For projects which include greater than one funding source, the information specified for New York State Clean Water State Revolving Fund (CWSRF) projects may be combined with other project signage requirements onto one sign, as allowed and approved by the funding agencies.

C. There shall be one project sign per project, centrally located as directed by the Engineer.

2.02 MATERIALS AND FABRICATION

A. Refer to the attached figure titled "Project Sign Schematic" for typical layout of sign. The size and spacing of the lettering on the sign may change to accommodate the addition of other funding agencies, as directed by the Engineer.

B. Sign Panel: The sign panel shall be constructed of 3/4-inch APA rated, A-B grade exterior plywood rabbeted into a 2" x 4" nominal frame or other suitable materials and construction capable of withstanding typical weather conditions common to the project site.

C. Fasteners: All fasteners used in the fabrication of the sign shall be rust-proof.

D. Sign Supports: The sign shall be adequately supported and braced to remain in the proper positioning and alignment, including resistance to wind loads and toppling of the sign.

E. Coating: All paint or exterior coverings used shall be exterior grade coating suitable for use on wood or the material of construction. The sign shall be prepared as follows:

Sign Face: The sign face background shall be white and shall consist of a minimum of two coats of paint.

Supports and Trim: The supports and trim shall be white and shall consist of a minimum of two coats of paint. The front facing surface of the 2" x 4" frame shall be royal blue.

F. Lettering and Emblem: The lettering shall be of the size and color as specified on the attached figure. The size and spacing of the lettering on the sign may change to accommodate the addition of other funding agencies, as directed by the Engineer. The emblem shall be of the size specified on the attached figure in royal blue.

PART 3 EXECUTION

3.01 INSTALLATION

A. The project sign shall be erected in the location and alignment, as directed by the Engineer, with the bottom of the sign panel a minimum of five feet above existing grade.

3.02 MAINTENANCE

A. The Contractor shall provide any and all materials required to maintain the sign in good condition throughout the duration of the Contract.

B. The Contractor shall remove the project sign from the construction site upon completion of construction and Owner's acceptance of the work, or when directed by the Engineer.

END OF SECTION

PROJECT SIGN SCHEMATIC

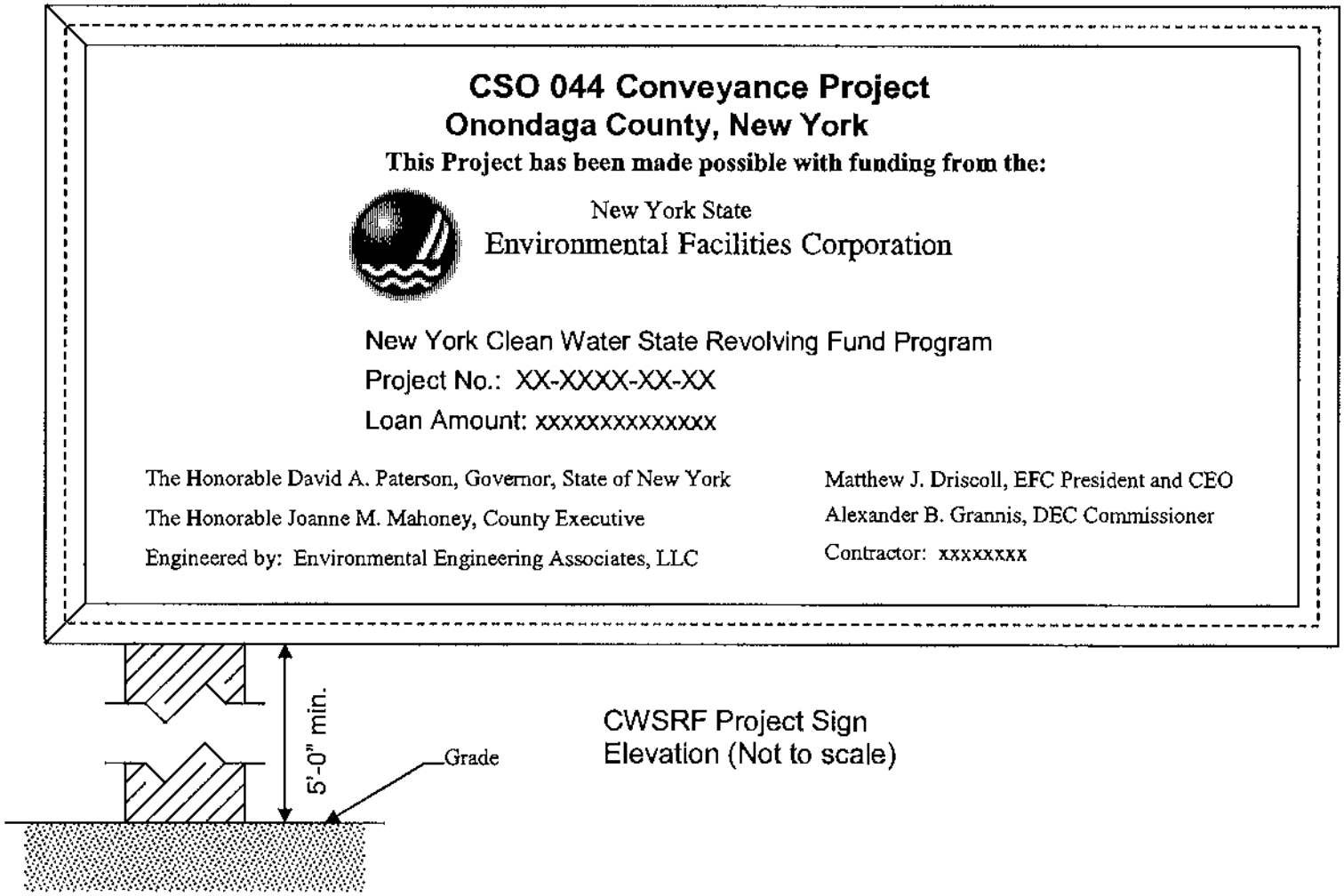

CWSRF Project Sign
Elevation (Not to scale)

SECTION 01510

ENGINEER'S FIELD OFFICE

PART 1 - GENERAL

1.01 SUMMARY

A. This Section includes furnishing and complete installation and maintenance of a new or like new mobile office structure for the exclusive use of the Engineer and the Owner. In addition, this Section shall include all operating expenses and use charges associated with the mobile office structure.

B. The mobile office structure shall be ready for occupancy within sixty (60) calendar days following the notice to proceed and shall be provided and maintained until final acceptance of the work conducted under this contract and it is removed from the site.

C. The mobile structure shall include all coordination with and the subsequent installation and associated use charges of all utilities including but not limited to: power, lighting, sewerage, water, gas, telephone, internet service, handicap ramp, stairs, etc.

D. The mobile structure, if not new or like new in the opinion of the Engineer, shall be corrected to the Engineer's satisfaction at no additional cost to the Owner.

E. The mobile office structure shall be installed and maintained in accordance with applicable federal, state, and local codes, regulations and standards. Stairs, platforms and railings shall comply with all applicable Occupational Safety and Health Administration (OSHA) requirements.

1.02 SUBMITTALS

A. Submittals shall be in accordance with the provisions set forth in the Special Project Conditions, General Provisions, and General Specifications.

B. Prior to obtaining any material in connection with this Section, detailed shop drawings shall be submitted.

C. The Contractor shall submit shop drawings, within seven (7) calendar days following award of the Contract, to the Engineer for review. Shop drawings shall show the floor plan and office space layout, furnishings, facilities and locations of telephone and power outlets. Information concerning the tie-in to the required utilities shall also be furnished.

PART 2 - PRODUCTS

2.01 GENERAL

A. The mobile office structure shall provide a minimum of 460 square-feet of floor space (10 feet by 46 feet).

B. The Contractor shall provide furnishings and equipment in accordance with the schedule listed below.

FURNISHINGS AND EQUIPMENT SCHEDULE

Item	Description	Features	Units
Mobile Office Structure	10' x 46' (box size) mobile office unit by Williams Scotsman Model MO5010 (or Equal) including all foundation and installation accessories required by local jurisdiction.	Two Closed Offices, Conference Room, Restroom, Stairs, Handicapped Ramp, and other necessary appurtenances.	1
Desks	30" x 72" desk shells by Allsteel (or Equal)	Laminate Tops	2

Item	Description	Features	Units
Utility Tables	30" x 72" non-folding, HON (or Equal)	Laminate tops to match desk units	1
Desk Chairs	Managerial mid-back chairs by Allsteel (or Equal)		2
Plan Table	36" x 72" 4-post with heavy gauge steel base by Safco (or Equal)	1" thick non-glare top	1
Stool	Rolling all purpose stool with back by United Chair (or Equal)		1
Miscellaneous Chairs	Stack chairs by HON (or Equal)		6
File Cabinets	4-Drawer, legal size, cabinets by HON (or Equal)	Color to match desks	2
File Cabinets	4-Drawer, legal size, 1 hour rated fire resistant cabinets by HON (or Equal)	Color to match desks	1
Plan Rack	Mobile stand by Safco (or Equal)	12 pivot brackets	1
Hanging Drawing Clamps	30" hanging clamps by Safco (or Equal)	6 per carton	1
Bookcases	34-1/2" x 59" steel units by HON (or Equal)	4 shelves	2
Storage Cabinet	36" x 72" steel units by HON (or Equal)	4 shelves, lockable doors	1
Coat Rack	Steel unit by HON (or Equal)	6 coat capacity	1
Potable Water	Refrigerated unit - hot and cold water		1
First Aid Kit			1
Fire Extinguishers	Class 2A, wall hung		2
Thermometer	Min/Max resettable		1
Bulletin Board	36" x 60"		1
Bulletin Board	24" x 36"		2
White Board	36" x 60"		1

Item	Description	Features	Units
White Board	24" x 36"		2
Waste Paper Basket			2
Recycling Basket			1
Pencil Sharpener	Wall mounted		2
Coffee Maker	12 cup with auto shut off		1
Conference Room Phone	Sound Station EX - Analog (31327-Exp)		1
Laptop	512K/1.6 GHZ processor, 80 GB Hard drive, 15" display	Internal CD-RW Operating System - Windows XP Pro Microsoft Word and Excel 2003 or later, Microsoft Internet Explorer	1
Printer/Scanner/ Copier/Fax	Xerox WorkCentre Pro 35	Fax Capabilities, Double Sided Printing, Staples, Speed-35 ppm, Max Resolution-600dpi, etc.	1
Cellular Phone		Private line, voice mail, wall and plug-in charger, solely for use of Engineer and his staff	1
Phone System	3 phones with 2 incoming phone lines plus an additional line for the fax		1
High Speed Internet Service	2 Data Points - Road Runner (or Equal)		1
Print Server	HP Jet Direct External Print Server	For HP 9300	1

C. The mobile office structure shall be furnished with telephone and internet service for the exclusive use of the Engineer and the Owner. The Contractor is responsible for providing and maintaining telephone and internet service to the mobile office structure

until the Work is completed and the mobile office structure is removed from the site.

D. The Contractor shall pay all charges for all local and long distance telephone calls made from the mobile office structure.

E. The mobile office structure shall meet the requirements for a 50 psf snow load.

F. A Professional Engineer, registered in the State of New York, shall review manufacturing compliance with applicable electrical and plumbing codes, snow and wind loads and the adequacy of tie-downs. The Professional Engineer shall seal the drawings to confirm compliance with all applicable federal, state, and local codes, standards and regulations.

G. Electrical construction shall include all electrical work required to provide electrical power from a power supplier to the mobile office structure and all electrical work required within the mobile office structure; and, all telephone work required to provide telephone service to the mobile office structure and all telephone service within the mobile office structure. Electrical construction shall comply with all applicable federal, state, and local codes, standards and regulations.

H. Plumbing construction shall include all work required to provide water service to and sewerage service from the mobile office structure. Plumbing construction shall comply with all applicable federal, state, and local codes, standards and regulations. Necessary measures to prevent water pipes from freezing shall be incorporated into the plumbing construction.

1. Water service work shall include, but not be limited to furnishing and installing all connections, meters, gauges, pipe, backflow prevention device, fittings and disinfection required to completely provide water service to the mobile office structure.

2. Municipal sewage service may not be available at the time the office structure is constructed. The Contractor shall make necessary provisions, including installation of a sewage holding tank, as required, to provide flushing toilet service in the complex. The Contractor will be responsible for all service charges, including pumping of septic waste, as necessary.

I. The heating, ventilation and air conditioning (HVAC) system shall include all work required to provide, install, test, and maintain the necessary HVAC equipment.

J. The mobile office structure shall be installed and maintained in accordance with all federal, state and local codes, standards and regulations.

2.02 MOBILE OFFICE STRUCTURE DETAILS

A. Miscellaneous

1. Steps with handrails, meeting OSHA requirements.

2. (1) Handicapped access ramp with railing, handrail, and platforms in accordance with all applicable OSHA and Americans with Disabilities Act (ADA)requirements.

3. Complex to be completely skirted around the perimeter of the base.

PART 3 - EXECUTION

3.01 INSTALLATION AND MAINTENANCE

A. Locate the mobile office structure as shown on the Contract Drawings and/or where it will serve the work adequately and result in no interference with performance of the Work. Relocate and modify facilities as required by the work. Coordinate location and installation with the Engineer.

B. The mobile office structure shall be designed and constructed in accordance with manufacturer's instructions and requirements, this Section, and all

federal, state, and local codes, standards and regulations.

C. A Professional Engineer, registered in the State of New York, shall review manufacturing compliance with applicable electrical and plumbing codes, snow and wind loads and the adequacy of tie-downs prior to installation.

D. The Professional Engineer shall seal the drawings to confirm compliance with all applicable federal, state, and local codes, standards and regulations.

E. Installation of the mobile office structure shall include installation of all utility connections for water, sewerage, power, lighting, telephone, gas (if applicable), etc. both inside and outside of the mobile office structure. All necessary permits, fees and connection charges, and all use charges, shall be borne by the Contractor.

F. Bottled water shall be provided for the water cooler identified in the furnishings and equipment schedule. One reserve bottle shall be on hand at all times. Disposable cups and a sanitary dispenser shall be provided and maintained.

G. The Contractor shall provide janitorial service for the mobile office structure on a weekly basis. All garbage, dust, and miscellaneous material collected during clean-up of the mobile office structure shall be disposed of at the Onondaga County Resource Recovery Agency facilities. The contractor shall provide the necessary bins or other containers necessary for the collection of recyclable materials and shall ensure that recyclable material is disposed of in accordance with all state and local codes, standards and regulations.

H. Maintenance of the mobile office structure shall include ensuring that adequate heating and cooling, electrical power and lighting, telephone service, plumbing services, and snow removal are available at all times during the work.

I. Equipment and furnishings shall be maintained, and repaired and/or replaced as necessary or when directed by the Engineer.

END OF SECTION

SECTION 02015

GEOTECHNICAL INSTRUMENTATION

PART 1 GENERAL

1.01 DESCRIPTION OF WORK

A. Work of this Section shall include, but not be limited to, all materials, equipment, labor and services required for the complete installation and protection of the Geotechnical Instrumentation shown on the Contract Drawings and listed in this Specification Section. The instrumentation shall be installed under the observation of the Engineer.

B. Work shall also include a pre-construction survey by the Contractor under the observation of the Engineer to document existing conditions of facilities listed herein adjacent to the project site. Contractor shall provide all equipment, materials, labor, and services required to complete the pre-construction survey of existing structures, facilities, and streets as identified herein.

C. Obtain all necessary permits and permission from appropriate property owners to conduct all work associated with this Specification Section. Provide copies of written permission with the geotechnical monitoring submissions, in accordance with Special Project Conditions Section P-039.

D. All instrumentation will be monitored by the Engineer, however the Contractor shall be responsible for maintaining all instrumentation.

E. Repair or replacement of geotechnical instrumentation damaged or destroyed during construction. Replace damaged or destroyed instrumentation within 48-hours of damage.

F. The work included in this section includes the following:

1. Provide all equipment, materials, labor and services to install, provide access to, protect, and maintain Geotechnical Instrumentation specified and as shown on the Contract Drawings. Geotechnical instrumentation shall be installed to monitor:

   a. The groundwater levels outside the limits of the excavation. The monitoring of groundwater levels inside the excavation shall be performed by the Contractor as part of their dewatering plan per Section 02140.

   b. The vertical deformation of existing structures/facilities/utilities adjacent to the site; and

   c. Ground vibration levels at adjacent facilities due to Contractor activities.

2. The instruments installed by the Contractor shall be installed under the observation of the Engineer. The Engineer will determine if the installed instruments are acceptable. The Contractor shall immediately replace, at no cost to the Owner, unsatisfactory instrumentation or instrumentation that is damaged during the project duration.

3. The approximate locations and related details of the geotechnical instrumentation are shown on the Contract Drawings. Locations shown on the Drawings shall be adjusted in the field, subject to review and acceptance by the Engineer, considering observed subsurface conditions, utilities, or other obstructions and the Contractor's means and methods.

4. The Contractor shall utilize the existing piezometers (PZs) and install new PZs, as shown on the Contract Drawings, to monitor performance of the dewatering operations during construction. The Contractor shall protect and maintain the existing/proposed piezometers indicated on the

Contract Drawings, for the duration of construction, with the exception of those instruments located within the limits of construction. Those instruments shall be protected and maintained until such time that they have demonstrated that performance requirements have been met, and excavation at the instrument location is necessary.

5. The Contractor may obtain additional data from the instrumentation and/or furnish, install and monitor, and determine the need for additional instrumentation, as the Contractor may consider necessary to monitor construction performance and safety aspects of the work. Furnishing, installing and monitoring of additional instrumentation shall be the Contractor's responsibility and shall be done at no additional cost to the Owner.

6. The Contractor shall be responsible for the following instrumentation installations:

   a. Provide and install piezometers at the locations shown on the Contract Drawings or as determined by the Engineer.

   b. Provide and install inclinometers at locations shown on the Contract Drawings or as determined by the Engineer. Provide and install inclinometer casings as shown on the Contract Drawings. Provide access to the inclinometer casing for reading at all times during construction. Maintain inclinometers and protect from damage until final completion of the project.

   c. Provide and install Structure Monitoring Points (SMPs), Utility Monitoring Points (UMPs), and Ground Monitoring Points (GMP) on structures, utilities, facilities, and ground surfaces adjacent to the site at locations shown on the Contract Drawings or as determined by the Engineer. The

Contractor shall protect all instruments from damage for the duration of the Work of this Contract.

d. Provide and maintain adequate lighting and safe means of access to all instrumentation locations as required for data collection by the Engineer for the duration of this project. Cooperate with the Engineer during instrumentation monitoring and schedule activities considering that this monitoring will occur throughout the duration of the project.

e. Provide as-built locations of all Contractor installed instrumentation.

f. The Contractor shall make independent interpretations of all data as it relates to contractual performance and job safety aspects of the work.

1.02 SYSTEM DESCRIPTION

A. The purpose of the geotechnical instrumentation program is to:

1. Provide supplemental pre-construction baseline data for comparison with construction and post-construction data.

2. Monitor groundwater levels, piezometric pressures, ground surface movement, vibrations, and movements of utilities, buildings and other existing facilities during construction, to determine whether they have been affected by construction activity and forewarn of unforeseen conditions that may require remedial or precautionary measures.

1.03 RELATED SECTIONS

A. Section 01323: Color Audio-Video Pre-Construction Records

B. Section 02140: Dewatering

C. Section 02170: Temporary Excavation Support

D. Section 02222: Controlled Blasting

E. Section 02300: Earthwork

1.04 DEFINITIONS AND REFERENCE STANDARDS

A. American Society for Testing and Materials (ASTM)-applicable Sections as noted below.

1.05 SUBMITTALS

A. Submittals shall be in accordance with the provisions set forth in the Special Project Conditions, General Provisions and General Specifications.

B. Prior to obtaining any material or equipment in connection with this Section, detailed shop drawings and product information shall be submitted and reviewed by the Engineer.

C. The Contractor shall submit for review by the Engineer the following information:

1. Product information indicating the instrumentation sizes, material types, specifications, installation procedures, locations and other pertinent data for inclinometers.

2. Name and relevant project experience list for the specialty subcontractor completing the installation of geotechnical instrumentation.

3. Installation details for groundwater observation wells, piezometers, structure monitoring points, utility monitoring points, support of excavation monitoring points and ground surface monitoring points as well as any other geotechnical instrumentation proposed by the Contractor.

4. Proposed plan showing proposed geotechnical instrumentation locations and showing the limits of Contractor-designed temporary excavation support systems. The geotechnical instrumentation plan shall be submitted with or prior to the Temporary Excavation Support Design submittal.

5. Boring logs showing soil and bedrock conditions for all observation wells and piezometers installed under this Contract.

6. Engineering seismograph details including manufacturer's literature.

7. As-built instrument location plan and instrument installation record sheets.

8. Contractor submittals shall be acceptable to the Engineer prior to undertaking the work. The Contractor is required to obtain an acceptable submittal and shall forward submittals in advance considering that re-submittals may be required.

1.06 QUALITY ASSURANCE

A. The Contractor shall be responsible to install all instrumentation to the satisfaction of the Engineer. The Contractor shall immediately repair or replace any Contractor-installed instrumentation that fails, for whatever reason, to perform its intended function, at no cost to the Owner.

B. An off-site benchmark will be provided by the Owner. The Contractor's surveyor shall tie all vertical survey measurements to the off-site benchmark.

C. Contractor to perform a pre-construction survey to document existing conditions of facilities located within the limits of construction and structures identified in the Schedule in Part 3.01 of Section 01323. Provide all equipment, materials, labor and services required to complete a preconstruction conditions survey of existing structures, facilities,

and streets in the vicinity of the site. The Contractor shall conduct a detailed examination to include interior basements and vaults, if any, and all floors of the building and exterior visual survey of the property and building. The façade of the building facing the project site shall be surveyed and documented from outside and inside. Video documentation of the interior and exterior shall be taken, showing visually evident structural faults, and including but not limited to: locations and sizes of cracks in floors, ceilings, and exterior and interior walls, especially instances of cracked or missing plaster; damaged masonry or roofing; damaged windows and doorways; walls which are not vertical or floors which are not horizontal; damage to foundations, including interior and basement walls; groundwater seepage/leakage conditions in basements, if any; and tightness of fit of doors and windows in their respective jambs. The Contractor shall coordinate the pre-construction survey with the Engineer.

PART 2 PRODUCTS

2.01 GENERAL

A. The Contractor shall furnish all installation tools, materials and miscellaneous instrumentation components.

B. Surface protection shall be flush with the ground surface in paved or other areas. For piezometers, ground surface monitoring points, and utility monitoring points, surface protection shall consist of a Boart-Longyear Leak Resistant Manhole, Part TC-240, or model 26T-6855 LF top only roadway box with a plain 5-1/4-inch lock lid as manufactured by Tyler Pipe, Tyler, TX or acceptable equivalent.

C. The Contractor shall repair all damages associated with the installation of all instrumentation.

2.02 INCLINOMETERS

A. Inclinometer casing shall be 2.75 inch O.D. ABS plastic casing with 4 grooves machined at 90 degrees. Manufacturer shall be Slope Indicator, or approved equal. Inclinometer inner casing, along with associated couplings and end caps, shall also be provided and installed by the Contractor in accordance with manufacturer's recommended procedures. Refer to the Contract Drawings for details.

B. Contractor shall provide Digitilt Inclinometer Probe, Digitilt Datamate readout box, 100-ft control cable, pulley assembly and slip-ring reel as manufactured by Slope Indicator, or approved equal. The inclinometer probe shall be compatible with the installed inclinometer casing type.

C. Bentonite/Cement grout shall consist of Type II Cement, Bentonite, and water mixed at the following ratio: 94 lbs. Cement Type II, 15 lbs. Bentonite, 12 gal. water.

2.03 PIEZOMETERS

A. Open standpipe piezometers shall be furnished and installed by the Contractor. See detail on the Contract Drawings for requirements of piezometers.

B. Provide piezometer screens with machine-slotted pipe, bottom caps and vented top caps as indicated on the Contract Drawings. The slotted pipe shall be 2-inch Schedule 80 PVC pipe with 3 rows of 0.01-inch wide slots on 120-degree centers, with a slot length to leave 0.25 inch between rows. The riser pipe shall be 2-inch Schedule 80 flush joint PVC pipe.

C. Filter sand shall conform to ASTM C778, Standard Specification for Standard Sand, for 20-30 sand.

D. Granular bentonite shall be Enviroplug Medium,as manufactured by Wyo-Ben, Inc., Billings, MT, or Holeplug,as manufactured by Baroid Division, Petroleum Services, Inc., Houston, TX, or acceptable equivalent.

E. Bentonite/Cement grout shall consist of Type II Cement, Bentonite, and water mixed at the following ratio: 94 lbs. Cement Type II, 15 lbs. Bentonite, 12 gal. water.

2.04 STRUCTURE AND UTILITY MONITORING POINTS

A. Monitoring points (Structure Monitoring Points and Utility Monitoring Points) shall be furnished and installed by the Contractor. See detail on the Contract Drawings for requirements of monitoring points.

1. Structure Monitoring Points

a. Structure monitoring points (SMPs) will be used to monitor vertical deformation of various facilities at selected locations shown on the Contract Drawings.

b. Type 1 SMPs shall consist of a 1/4-inch diameter x 2 1/2-inch long stainless steel socket head cap screw, ASTM A307 UNC thread, screwed into a 3/4-inch long x 1/2-inch diameter tamp-in screw anchor. The cap screw shall protrude from 1-inch to 1 ½-inch from the structure surface. The anchor and casing shall meet the requirements of GSA Specification FF S 325 Group 1, Type 1, Class 1. These tamp-in screw anchors shall typically be installed into vertical surfaces of buildings.

c. Type 2 SMPs shall consist of a ¼-inch diameter x 2-inch long PK nail grouted into a ½-inch diameter pre-drilled hole. This type of monitoring point shall be applied to horizontal structural surfaces.

2. Utility Monitoring Points

a. Utility monitoring points (UMPs) will be used to monitor vertical deformation of

various existing utilities at selected locations shown on the Contract Drawings.

b. Provide 1-in. PVC casing, threaded and coupled, as needed.

c. Provide No. 4 rebar, threaded and coupled, as needed.

d. Filter sand shall conform to ASTM C778, Standard Specification for Standard Sand, for 20-30 sand.

e. Bentonite/Cement grout shall consist of Type II Cement, Bentonite, and water mixed at the following ratio: 94 lbs. Cement Type II, 15 lbs. Bentonite, 12 gal. water.

2.05 GROUND SURFACE MONITORING POINTS

A. Ground-surface monitoring points (GMPs) will be used to monitor vertical deformation of the ground at locations shown on the Contract Drawings.

B. Type 1 GMPs shall consist of a ¼-inch diameter masonry nail driven into a paved or concrete surface.

C. Type 2 GMPs shall consist of a 4-foot long, ¾-inch diameter steel rod and a surface roadway box. The top of the rod shall be rounded and punch-marked at its center.

Filter sand shall conform to ASTM C778, Standard Specification for standard sand, for 20-30 sand.

2.06 EQUIPMENT

A. Provide to the Engineer one electronic water level indicator with a 50-feet of graduated cable, and graduations at 0.02 feet or smaller intervals. This equipment will be used by the Engineer to monitor the instruments.

B. Seismographs

1. Provide to the Engineer two (2) new portable seismographs for monitoring the velocities of ground vibrations resulting from construction activities. Provide model SSU 2000DK as manufactured by P.R. Berger & Associates, Warrandale, PA; model Blastmate III as manufactured by Instantel Inc., Kanata (Ottawa), Ontario, Canada; model VMS-2000 as manufactured by Thomas Instruments Inc., Spofford, NH; or model NC5310/D, as manufactured by Nomis Inc., Birmingham, AL, or acceptable equivalent. The seismograph shall have the following minimum features:

   a. Seismic range: 0.01 to 10 inches per second with an accuracy of 5 percent and no more than a 3 db roll off at the low frequency end.

   b. Flat frequency response: 2 to 200 Hertz.

   c. Three component sensor.

   d. Fourth channel for air blast monitoring.

   e. Two power sources: Internal rechargeable battery and charger and 115 volts AC. Battery must be capable of supplying power to monitor vibrations continuously for up to 24 hours.

   f. Capable of internal dynamic calibration.

   g. Provide computer software to perform frequency analyses of data obtained on magnetic disks.

   h. Continuous monitoring mode must be capable of recording peak velocities.

2. A factory calibration shall be conducted on all seismographs at the manufacturer's facility prior

to shipment. Each factory calibration shall include a calibration curve with data points clearly indicated, and a tabulation of the data. Each instrument shall be marked with a unique identification number. As a minimum requirement, the equipment shall be calibrated at least once per year, or more frequently as recommended by the manufacturer.

PART 3 EXECUTION

3.01 GENERAL REQUIREMENTS

A. The Contractor shall install instruments, following the guidelines included in the manufacturers' instruction manuals, as detailed in the reviewed submittal, and as specified herein and shown on the Contract Drawings.

B. The instrumentation locations as shown on the Contract Drawings are approximate. Prior to installation of any instrumentation, the Contractor shall evaluate field conditions and select proposed locations for the instrumentation. The Contractor shall submit to the Engineer for review the proposed locations for all instrumentation.

C. Installation procedures for instruments in boreholes shall be such that all steps in the procedure can be quality assured. Volumes of each increment of backfilling with sand and granular bentonite shall be small enough such that no bridging occurs, and the depth to the top of each backfill increment shall be checked after placement.

D. Prior to installing any instrument through drill casing or augers, all material adhering to the inside of the casing or augers, and all cuttings, shall be removed thoroughly.

E. Whenever withdrawing drill casing or augers during instrument installation in a borehole, care shall be taken to minimize the length of unsupported borehole

and the rate of casing or auger withdrawal. Collapse of the borehole shall not be allowed to occur. Backfill material shall not be allowed to build up inside the casing or auger such that the instrument is lifted as the casing or auger is withdrawn. The casing or auger shall be withdrawn without rotation. The casing or auger may be omitted, if accepted by the Engineer, only where it can be shown that instrument installation without the casing or auger will not cause collapse of the borehole or in any way adversely affect instrument installation.

F. Where depth of utility is unknown, utility monitoring points shall be installed using vacuum excavation methods.

G. The Contractor shall notify the Engineer at least 48-hours prior to installing each instrument.

H. The Contractor may install, monitor, and interpret data from instrumentation, in addition to that specified herein, that the Contractor deems necessary to ensure performance of the work in accordance with the Contract Documents, and the safety of personnel and the Work, at no additional cost to the Owner. The Contractor shall submit all data from supplemental instrumentation to the Engineer for their review within 24 hours of observation.

I. The Contractor shall allow access to all instruments by the Engineer at all times.

J. The Contractor shall extend installed instrumentation and reinstall roadway boxes as necessary as grade changes occur, and revise instrument reference elevations as necessary.

K. An instrument that fails the specified post installation acceptance test shall be replaced by an identical instrument at no additional cost to the Owner.

L. After installation, roadway boxes shall be free-draining.

M. As-built locations and elevations shall be submitted for all replacement instrumentation required during construction.

3.02 INSTALLATION

A. Piezometers

1. Piezometers shall be installed at the locations and depths shown on the Contractor's approved Geotechnical Instrumentation Plan and on the Contract Drawings.

2. Bentonitic drilling mud shall not be used.

3. After completion of installation, the as built location in horizontal position shall be determined to an accuracy of 0.5 feet, and in elevation to an accuracy of 0.01 foot.

B. Structure Monitoring Points (SMPs)

1. SMPs shall be installed at the locations shown on the Contractor's approved Geotechnical Instrumentation Plan and on the Contract Drawings.

2. All SMPs shall have the horizontal as-built location determined to an accuracy of 0.5 feet and the elevation to an accuracy of 0.005 feet.

C. Utility Monitoring Points (UMPs)

1. UMPs shall be installed at the locations shown on the Contractor's approved Geotechnical Instrumentation Plan and on the Contract Drawings.

2. Where necessary, The Contractor shall install the UMPs by the use of vacuum excavation exercising due diligence not to disturb or damage the utility being monitored and to minimize disruption and damage to adjacent areas.

3. The location of the utility in plan shall be determined and the borehole advanced to within a maximum of 2-feet above the top of the utility. The Contractor shall be responsible for any damage to the utility during installation of the utility monitoring point. Drill casing may be used during the installation.

4. After completion of installation, the as built location in horizontal position shall be determined to an accuracy of 0.5 foot and in elevation to an accuracy of 0.01 foot.

D. Ground Surface Monitoring Points (GMPs)

1. GMPs shall be installed at the locations shown on the Contractor's approved Geotechnical Instrumentation Plan and on the Contract Drawings.

2. All GMPs shall have the horizontal as-built location determined to an accuracy of 0.5 feet and the elevation to an accuracy of 0.005 feet.

E. Seismographs

1. The Engineer will set up seismographs where necessary to monitor vibration levels on facilities that may be affected by construction activities. These locations will include the ground at points between 3 and 6 feet from the faces of buildings or the floor slab near the closest exterior face of the buildings.

G. Inclinometers

1. Inclinometer casings shall be installed at the locations shown on the Contractor's approved Geotechnical Instrumentation Plan and on the Contract Drawings or as directed by the Engineer. After installation, the casing groove spiral shall not exceed one degree per 10 feet of length, the orientation of the grooves at the top of the casing shall be within 10 degrees of the

planned orientation, and no part of the casing shall deviate from vertical by more than 4 percent of the depth to that part. The bottom of the casing shall extend to 20 feet below the base of the adjacent trench.

2. One set of grooves, defined as the A-axis, shall be oriented perpendicular to the excavation. Casing groove orientation shall be maintained throughout installation.

3. After completion of installation, a post-installation acceptance test shall be performed to verify that there is no grout in the inclinometer casing, that groove orientation and verticality are correct, and that the inclinometer probe tracks correctly in all four orientations.

4. After completion of installation, the as-built location in horizontal position shall be determined to an accuracy of ± 0.5 foot, and the elevation of the top of the inclinometer casing to an accuracy of ± 0.01 foot. The reference point selected on the inclinometer casing to determine horizontal position shall be marked on the casing for future use in data collection.

3.03 DATA COLLECTION

A. Collection and reporting of data from the instrumentation shall be the responsibility of the Engineer. The Contractor shall provide and facilitate safe access to the Work for the Engineer to collect data from the instrumentation.

3.04 THRESHOLD AND LIMITING VALUES

A. Definitions

1. Threshold Value: Value of instrumentation readings at which the Engineer and Contractor jointly assess necessity of altering methods, rate or sequence of construction.

2. Limiting Value: Value of instrumentation readings at which the Engineer can order the Contractor to cease construction operations, make site and affected properties secure, and take necessary and agreed upon measures to mitigate unacceptable movements and to assure the safety of the work and the public.

B. The project Threshold and Limiting Values are specified on Table 1 at the end of this Section. The Engineer will immediately inform the Contractor verbally, and in writing within 24-hours, when the Threshold and Limiting levels are reached.

3.05 DATA REPORTING

A. Instrumentation data will be submitted to the Contractor within 48 hours after readings are taken.

B. Each week the Contractor shall submit to the Engineer a description of the work performed during that week including:

1. A description of groundwater control operations. This description shall include the pump locations and depths, times and durations of operation, and estimated quantity of flow from dewatering operations.

2. A summary of excavation support system construction activities. This summary shall include any sheet pile driving activities and other activities associated with construction of excavation support systems.

3. A summary of excavation and filling activities. This summary shall include a general description of where excavation has occurred during the week, together with plots of the elevation of the bottom of the excavation or top of the fill versus station.

4. A summary of the week's pipe installation activities showing plan and profile of the pipe laying progress made during the week.

5. A description of any unusual events which may have affected the instrumentation readings. This report shall include a description of any remedial or precautionary measures that were implemented during the week in response to geotechnical instrumentation or other data, including when they were implemented and for what reason. The report shall also include a description of any future remedial or precautionary measures that are planned in response to existing geotechnical instrumentation or other data.

3.06 DAMAGE TO INSTRUMENTATION

A. The Contractor shall protect all instruments and appurtenant fixtures, leads, connections, and other components of instrumentation systems from damage due to construction operations, weather, traffic, and vandalism.

B. If an instrument is damaged or inoperative, including an existing instrument installed by others, the Contractor shall repair or replace the damaged or inoperative instrument within 48 hours at no additional cost to the Owner. The Engineer will determine whether repair or replacement is required. The Engineer may impose a work stoppage in the vicinity of the damaged or inoperative instrument until it is again operational, at no additional cost to the Owner.

TABLE 1: THRESHOLD AND LIMITING VALUES

INSTRUMENTATION LOCATION / TYPE	INSTRUMENT CRITERIA	
	THRESHOLD	LIMITING
UMPs	1 inch	2 inch
Inclinometers	1 inch	2 inch
SMP Type I (Housing)	1/4 inch	1/2 inch

INSTRUMENTATION LOCATION / TYPE	INSTRUMENT CRITERIA	
	THRESHOLD	LIMITING
SMP Type 1 (Bridges)	1/4 inch	1/2 inch
GMP Type 1	1 inch	2 inch
GMP Type 2	1 inch	2 inch
Vibration (at nearest structure)	(PPV)0.25 in/sec	(PPV)0.50 in/sec
Piezometer	5 ft	10 ft

Notes:
1. PPV is Peak Particle Velocity

END OF SECTION

SECTION 02120

WASTE MOVEMENT, TRANSPORTATION, AND DISPOSITION

PART 1 GENERAL

1.01 WORK SPECIFIED

A. The Contractor shall provide all labor, equipment, materials, and services necessary to characterize, profile, load, containerize, transport, and dispose of/reclaim/recycle all waste materials generated during implementation of the Contract. Such materials include, but are not limited to, building demolition debris, fluorescent and HID lamps and ballasts, refrigerant, mercury-containing devices, batteries, smoke detectors, containerized chemicals, various oils, asbestos-containing materials (ACMs), loose paint, abandoned cars, tires, miscellaneous equipment/materials, disposable equipment and personal protective equipment (PPE), decontamination waste, and staging/decontamination area demolition materials.

1.02 RESPONSIBILITIES

A. The Contractor shall be directly responsible for compliance with all applicable federal, state, and local laws, rules, and regulations governing storage, handling, manifesting, transportation, and disposal/reclamation/recycling of waste materials generated as a result of work activities subject to the Contract Documents.

1.03 SUBMITTALS

A. At least 21 calendar days prior to beginning the work of Section 02120, the Contractor shall submit the following items to the Engineer for review:

1. A list of proposed transporters. All transporters must posses a valid transporter permit for handling the waste(s), as applicable. Valid permits shall be submitted with the list of proposed transporters.

2. A list of disposal/reclamation/recycling facilities for all anticipated waste streams.

All disposal/reclamation/recycling facilities must be permitted in accordance with applicable regulations and be willing to accept anticipated waste streams.

3. Estimated quantities of the anticipated number and type of containers to be utilized to transport each waste stream.

PART 2 PRODUCTS

2.01 MATERIALS AND EQUIPMENT

A. To be specified and supplied by the Contractor.

2.02 CONTAINERS

A. The Contractor shall provide United States Department of Transportation- (USDOT-) approved containers for containerization of all waste materials generated as a result of the work activities under the Contract. If the containers are to be disposed of together with the waste they contain, the Contractor shall include costs for such containers in the bid proposal.

B. All containers shall be in good condition with no holes or rusted out areas, and with tailgates, which close tightly and are lockable (if applicable).

C. All containers shall be labeled by the Contractor in accordance with applicable laws, rules, and regulations.

PART 3 EXECUTION

3.01 GENERAL

A. All waste streams shall be transported to approved disposal/reclamation/recycling facilities that are permitted to accept such types of waste. The disposal/recycling/ reclamation facilities shall be proposed by the Contractor and reviewed by the Engineer. Review by the Engineer will not release the Contractor from their obligation to comply with all applicable laws, rules, and regulations and shall not

constitute a relief from the requirements of the Contract.

B. All costs associated with the characterization, profiling, disposal acceptance, regulatory compliance, loading, transportation, and disposition of the waste materials shall be borne by the Contractor and shall be included in Contractor's bid proposal.

3.02 DISPOSITION OF MATERIALS

A. The following materials shall be transported for offsite disposal/recycling/reclamation by the Contractor:

1. Building demolition debris.

2. Demolition debris staging area(s)

3. ACMs.

4. Loose paint chips. The loose paint collected from the sites shall be handled and disposed of as a Resource Conservation and Recovery Act (RCRA) hazardous waste due to assumed lead toxicity (EPA hazardous waste number D008).

5. Fluorescent and HID lamps. All fluorescent and HID lamps shall be disposed of as a universal waste.

6. Lamp ballasts. Leaking ballasts and any material that comes in contact with leaking material shall be transported to a Toxic Substance Control Act- (TSCA-) compliant incinerator for disposal. Non-leaking ballasts ("PCB-containing" and "No PCBs") shall be segregated and placed in USDOT-approved containers prior to offsite disposition in accordance with all applicable laws, rules, and regulations.

7. Mercury-containing devices. All mercury-containing devices shall be disposed of as universal waste.

8. Refrigerants. Used chlorofluorocarbon (CFC) refrigerants from totally enclosed heat transfer equipment are excluded from hazardous waste

regulations, provided the refrigerant is reclaimed for future use. Recovered CFC refrigerants shall be transported to a reclamation facility.

9. Batteries.

10. Fire extinguishers.

11. Smoke detectors. The smoke detectors that contain radioactive material shall be disposed of as a RCRA low-level radioactive waste.

12. Various oils.

13. Containerized chemicals.

14. Automobiles and all associated parts.

15. Decontamination waste (including liquid and solid decontamination waste) and decontamination areas.

16. All other equipment, materials, and wastes currently located within and adjacent to each building.

17. All other wastes generated during implementation of the Sections referenced in Section 1.03(A)(3).

B. The Contractor shall contact the disposition facility(s) for size limitation requirements for all materials that will be disposed of off-site, and process such materials accordingly prior to their shipment off site.

3.03 RECORD KEEPING

A. The Contractor shall be responsible for waste characterization and profiling. All disposal-associated documentation shall be submitted to the Engineer for review prior to submittal to the disposition facility.

B. The Contractor shall prepare the waste manifests and bills of lading for the transport and offsite disposal/reclamation of all waste materials. The Owner and the Engineer will review the waste manifests and bills of lading prior to offsite transport of

waste materials. The Contractor shall provide the Engineer with the waste manifest a minimum of 48 hours prior to offsite transport of the waste materials. The County will be responsible for signing waste manifests for each offsite shipment of waste materials. The following address shall be specified as a "Waste Generator" on the manifests and bills of lading:

Onondaga County Department of Water Environment Protection
Lake Improvement Project Office
650 Hiawatha Boulevard West
Syracuse, New York 13204
Telephone: (315) 435-2260

The address of the actual site of waste generation shall also be listed on the manifest.

C. Modifications to waste profiles, manifests, bills of lading, or any other associated documentation shall be made by the Contractor at the request of the Owner and/or the Engineer at no additional cost to the Owner.

D. The Contractor shall coordinate with disposal/recycling/reclamation facilities for a timely receipt of executed copies of hazardous waste manifests, nonhazardous waste manifests, bills of lading, and certificates of disposal/recycling/reclamation and shall provide original copies of these documents to the Owner to the address specified in Part 3.03-B above for all wastes transported offsite. In addition the Contractor shall submit copies of the above-referenced documents to the Engineer. Copies must be received within 1 (one) week of disposal/recycling/reclamation.

E. The Contractor shall submit executed copies of the waste manifests, bills of lading, and verification of disposal/recycling/reclamation to the Owner and to the Engineer to assure proper project close-out and final payment. Progress/monthly payment shall not be made if the copies of manifests, bills of lading, and certificates of disposal/recycling/reclamation are not received by the Owner and the Engineer for all wastes transported offsite.

F. The Contractor shall be responsible for providing the generator state (i.e., New York) and the disposal state (if different than New York) with executed copies of hazardous waste manifests, as required.

3.04 POST-WASTE SHIPMENT ACTIVITIES

A. Any disposable material not used or shipped offsite during waste shipment operations (e.g., paper, food containers, etc.) shall be placed into a Contractor-provided sealable container, removed from the site, and properly disposed of by the Contractor.

3.05 HEALTH AND SAFETY PROTOCOLS

A. The Contractor shall comply with all applicable federal, state, and local regulations (including, but not limited to, Occupational Safety and Health Administration [OSHA] regulations) during the implementation of the work.

END OF SECTION

SECTION 02140

DEWATERING

PART 1 GENERAL

1.01 WORK INCLUDED

A. This Section includes furnishing, maintaining, operating and removing temporary groundwater control systems as required to control groundwater levels during construction; preventing surface water from entering excavations; and handling, storage, testing and disposal of the pumped water.

B. The Contractor is responsible for designing and installing a groundwater control system it deems necessary to meet the design and performance requirements specified herein. A temporary excavation support system is to be designed by the Contractor in accordance with specified minimum requirements, and installed along the proposed excavations for this Contract. The Contractor shall coordinate the design of the groundwater control system with the design of the temporary excavation support system. Refer to Section 02170 for requirements regarding temporary excavation support.

C. The Contractor shall provide and install observation wells and/or piezometers to monitor the performance of its groundwater control system inside limits of excavation. Groundwater outside of the excavation limits shall be monitored per Section 02015. The Contractor shall utilize soil-sampled test borings to provide subsurface information to aid in its design of groundwater control systems.

1.02 RELATED SECTIONS

A. Section 02015 - Geotechnical Instrumentation

B. Section 02170 - Temporary Excavation Support

C. Section 02300 - Earthwork

D. Section 02530- Sewage and Drainage Piping Installation

1.03 REQUIREMENTS

A. The Contract Documents require the use of an impervious excavation support system (e.g., continuous interlocking steel sheet piles). As such, groundwater and piezometric levels in the soil overburden materials (Fill, Alluvial, Glacifluvial, and Glaciolacustrine Deposits) for all excavations below the groundwater table shall be lowered through a combination of shallow wells, well points, deep wells, or a combination of these, located directly inside of the excavation support system. The temporary excavation support system shall be designed and installed to serve as a continuous groundwater cut-off wall through the granular soil deposits that exist along the conveyances alignment. Sumping may be necessary to control perched groundwater in some areas. No shallow wells, well points or deep wells shall be located outside the limits of the temporary excavation support system, except as shown on the Contract Drawings for monitoring purposes.

B. The extent of operation for the Contractor's groundwater control system shall be limited such that the Contractor does not exceed the criterion that has been authorized by the NYS DEC for discharge into Onondaga Creek and/or the OCDWEP Groundwater Discharge Permit as indicated in Special Project Conditions Section P-013.

C. The Contractor shall retain the services of a specialty dewatering firm with a minimum 10 years of experience in groundwater control design and installation, operation, and monitoring of groundwater control systems during construction.

D. A licensed New York State Professional Engineer representing the specialty dewatering firm shall be responsible for designing the groundwater control system, and will be required to visit the site on at least a monthly basis during groundwater control system operation to review the dewatering and monitoring systems at regular frequencies and as requested by the Engineer. The Contractor's Professional Engineer shall collaborate with the designer of the temporary excavation support system, and coordinate the design of the dewatering system with the design and location of the temporary excavation support system. The Contractor's

Professional Engineer shall have a minimum 10 years of relevant experience in designing similar dewatering systems as the one required for this project. A resume shall be furnished demonstrating the requisite experience.

E. Performance and Design Requirements:

1. The Contractor shall implement the minimum dewatering performance requirements as presented herein, and whatever measures it deems necessary to meet additional requirements listed below. As a minimum, the groundwater control system shall consist of a series of shallow wells, wellpoints or deep wells, or a combination of these, and shall be installed inside the excavation support system.

2. Dewatering shall be performed to:

a. Lower the groundwater table or piezometric level in the aquifer soils immediately beneath the excavation invert to a minimum of 2 ft below the excavation invert for all excavations below groundwater level. Piezometers and observation wells shall be used to confirm that this performance requirement is satisfied prior to any excavation below groundwater levels.

b. Protect the undisturbed characteristics of the subgrade soils to preserve the bearing capacity, and to prevent uplift or heave of the subgrade or underlying soil strata. As a minimum, the Contractor shall evaluate the potential for uplift or heave of soil strata beneath the proposed excavation invert; and shall provide a hydrostatic pressure relief system as necessary to prevent uplift or heave from occurring. If directed by the Engineer, the Contractor shall excavate all unsuitable soils that become disturbed due to inadequate dewatering and replace with compacted fill in accordance with requirements in Section 02300, Earthwork, at no additional cost to the Owner.

c. Prevent any damage to adjacent structures, creek bank, and utilities, whether existing or under construction, from settlement or other adverse effects resulting from water removal or dewatering methods.

d. Maintain groundwater level at such an elevation that the uplift pressure on completed portions of structures (e.g., manholes, conveyance flushing chambers, etc.) does not exceed 80 percent of the downward pressure produced by the dead load of the structure plus backfill in place.

3. The Contractor shall provide water control measures to prevent surface water and water from the adjacent Onondaga Creek, or from trenches and pipes associated with existing utilities, from entering excavations.

4. The methods of controlling groundwater inside of excavations are to be based on the minimum requirements presented herein, subject to review by the Engineer.

5. Collection and disposal of groundwater shall be performed in accordance with Federal, State and Local codes, permits, rules and regulations. Refer to the Special Project Conditions Section P-013(3) for requirements regarding the discharge of groundwater into Onondaga Creek and/or OCDWEP collection system.

6. The Contractor shall provide backup power generation and groundwater control system components, and devise emergency procedures for maintaining continuous, uninterrupted groundwater control operations.

7. Comply with all Federal, State and Local Codes, permits, ordinances and regulations for sediment, stormwater and dewatering wastewater management. Work of this Section shall comply with all applicable Occupational Safety and Health Administration (OSHA) standards.

8. The Contractor shall coordinate with all utility companies to verify all utility locations prior to commencing work.

9. The Contractor shall be responsible for protecting public as well as private water supplies within the zone of influence of any water removal or dewatering system which is required.

10. The discharge from water removal or dewatering systems shall be made directly to approved discharge points by means of discharge pipes, lines or open, lined channels installed from the dewatering site to the point of discharge.

11. No water shall be permitted to be discharged as overland flow.

12. All shallow wells, wellpoints, and deep wells shall be designed with adequate filters to prevent migration of fines from the surrounding soils. Develop all wells as specified herein.

13. The Contractor shall protect all existing facilities, creek bank, bridge abutments, structures, roadways, utilities and drainageways from damage from the flow of discharge water.

14. The Contractor shall provide for erosion control at all discharge points.

15. The Contractor shall also provide temporary sediment basins, filtration systems, or other measures in accordance with New York State Standards and Specifications for Erosion and Sediment Control, and as required by all other federal, state and local codes, laws, regulations and ordinances.

16. At all times, the method of discharge shall be in conformance with the requirements of regulatory agencies having jurisdiction.

17. The Contractor shall design and maintain dewatering system components to address saline and very hard groundwater resulting from high concentrations of total dissolved solids,

including hardness, chloride, sulfate, and magnesium, in the groundwater. Maintenance shall include cleaning of incrustation on well screens and redevelopment as necessary to maintain discharge rates and well efficiency.

1.04 EXISTING INFORMATION

A. The work will be performed based on subsurface conditions that have been investigated for the purpose of developing assumptions about ground conditions. Both a Geotechnical Data Report (GDR) and Geotechnical Baseline Report (GBR) have been prepared based on this information.

B. The primary objective of the GDR is to present the results of geotechnical investigations conducted for the project in a factual manner. These results include descriptions of field and laboratory investigations performed and procedures used, background physiography, regional geology information, and summaries of site subsurface conditions.

C. The primary objectives of the GBR are to present the interpretation of subsurface conditions; to discuss the basis of geotechnical design and construction; and to set baselines for geotechnical conditions expected to be encountered during construction.

D. The Contractor is cautioned that the groundwater regime in the contract area is complex and is influenced by many factors, including, but not limited to: the water levels in Onondaga Creek; heterogeneity of the soils within the soil units present at the site; existence of very pervious gravel layers found in both Alluvial and Glaciofluvial soil deposits; infiltration of surface water and precipitation; local construction activities; and drainage into and out of trenches and pipes for existing utilities.

E. The Contractor's attention is drawn to the fact that saline groundwater conditions exist at depth below the site, and that generally the salinity concentrations, as well as total dissolved solids (TDS) in groundwater, increase with depth. It is anticipated that deep well pumping for prolonged periods is likely to draw up these conditions, and that the discharge will increase in salinity and level of TDS with time.

As a result, it should be anticipated that very corrosive groundwater conditions may be encountered during the period of dewatering system operation, even if not encountered initially. The Contractor will be responsible for proper treatment and discharge of groundwater encountered during the period of dewatering system operation in accordance with Special Project Conditions Section P-013(3).

F. The Contractor's attention is drawn to the fact that potential constituents of concern may be present in groundwater. The Phase II Environmental Assessment (included in Reference Information - Not Part of Contract) did not identify any constituents of concern in the groundwater. However the Contractor will be responsible for proper treatment and discharge of groundwater encountered during the period of dewatering system operation in accordance with Special Project Conditions Section P-013(3).

1.05 SAFETY

A. Method of construction shall be such as to ensure the safety of the work, project participants, the public, third parties, and adjacent property, whether public or private. All work shall conform to the requirements of all Federal, State, and local laws and regulations. The Contractor is solely and completely responsible for maintaining safe work conditions at the site at all times.

B. Refer to Special Project Conditions Section P-012 and General Provisions Section G-1.08 for additional safety requirements.

1.06 SUBMITTALS

A. Submittals shall be in accordance with the provisions set forth in the Special Project Conditions, General Provisions and General Specifications. A multiple-stage submittal process is required. The Contractor shall initially submit a conceptual design for the groundwater control system addressing the items listed below, prior to performing the required additional soil sampled test borings and installing observation wells and piezometers. Following the completion of these additional test borings, the Contractor shall submit the results of the subsurface explorations. Based on the results of the Contractor's subsurface

exploration program, the Contractor shall submit working drawings and design data showing the final design details of the groundwater control system, including the items listed below.

B. Qualifications of the Contractor for dewatering system operations, maintenance, monitoring, and sampling.

C. Qualifications and experience of specialty dewatering firm and registered New York State Professional Engineer responsible for conducting the specified groundwater deep well pumping test, and the design, installation and operation of groundwater control systems.

D. Details of the conceptual dewatering scheme and subsurface exploration program including: arrangements, locations, and depths of proposed dewatering elements (e.g., shallow wells, well points, and deep wells, observation wells and piezometers; methods of installation and sequence of installation and operation of dewatering elements, observation wells and piezometers; anticipated pumping rates of dewatering elements; details of discharge system; and details of monitoring program.

E. Results of the Contractor's subsurface exploration program including test boring logs.

F. Final design details of the groundwater control system shall include the following:

1. Arrangements, locations, and depths of proposed groundwater control system components.

2. A description of equipment and materials to be used and the procedures to be followed in installation, well development, operation and maintenance of groundwater control systems in relation to the proposed sequence of excavations.

3. Standby equipment and standby power supply.

4. Proposed locations of discharge points.

5. Plan locations of proposed surface water control and discharge systems.

6. Types of sedimentation basins and filters.

7. Design calculations demonstrating the adequacy of the proposed system and equipment.

8. Design calculations to evaluate the potential for uplift and bottom heave of impervious soil layers beneath the excavation invert, and details of depressurization program to address uplift where found to be a problem.

9. Design calculations verifying that uplift pressures on completed portions of the structures are within specified limits during all stages of construction, particularly during backfilling and decommissioning of dewatering system components.

10. Details of remedial groundwater recharge wells, cutoff walls, or grouting to be used if necessary to limit groundwater drawdown outside of excavations.

11. Revised groundwater control system drawings to indicate changes made to accommodate field conditions and to comply with design criteria. Submit as-built drawings within seven (7) calendar days after the completion of groundwater control system installation for each component of the project.

12. List of applicable laws, regulations, rules and codes to which dewatering conforms and all required permits, notices and reports.

13. Permit-required laboratory testing, monitoring and inspection records.

14. Methods to be used and test results of groundwater sampling as required in Special Project Conditions Section P-013(3).

15. Methods for removing dewatering system elements, including methods used to ensure no significant ground movements will occur as a result of extraction that could adversely impact completed structures. If deemed necessary, describe locations of, or conditions under which dewatering system elements will be left in place,

including level for cutting off, and method of tremmie grouting.

PART 2 PRODUCTS

2.01 MATERIALS

A. Provide piezometers in accordance with the submitted dewatering plan or as specified in Section 02015, Geotechnical Instrumentation.

B. Provide casings, well screens, piping, fittings, pumps, power and other items required for dewatering system.

C. Provide sand and gravel filter around the well screen. Wrapping geotextile fabric directly around the well screen shall not be allowed.

D. When shallow wells, well points, and deep wells are used, provide pumping units capable of maintaining high vacuum and handling large volumes of air and water at the same time.

E. Provide and store auxiliary dewatering equipment, consisting of pumps and hoses on the site in the event of breakdown, at least one spare pump for every five used.

F. Provide dewatering equipment, including an appropriately sized settling tank, and maintain erosion/sedimentation control devices as indicated or specified and in accordance with the dewatering plan.

G. Provide temporary pipes, hoses, flumes, or channels for the transport of discharge water to the discharge location(s).

PART 3 EXECUTION

3.01 GROUNDWATER CONTROL

A. Execution of any earth excavation or installing temporary excavation support systems, and dewatering shall not commence until the related submittals have been reviewed by the Engineer with all Engineer's comments satisfactorily addressed, and the Contractor is on site and has begun the duties specified herein.

B. Do not excavate until the dewatering system is operational.

C. Following their installation, the wells shall be developed. Develop the wells in accordance with the reviewed submittal design. The wells shall be developed by pumping and surging, alternately jetting (with water or air) and pumping, or alternative method acceptable to the Engineer, until the water clears visibly and there is no visible evidence of suspended solids, including entrained soils and drilling fluids. Sands content in the water at the conclusion of well development and throughout well operation shall be less than 5 ppm, determined using a Rossum Sand Content Tester or Imhoff cone, averaged based on at least three measurements.

D. Dewatering through shallow wells, well points, and deep wells shall be initiated prior to excavation and following installation of the specified excavation support walls. The dewatering wells shall continue to operate during excavation/construction until such time that structures are backfilled with no danger of uplift. As necessary, the dewatering system shall be augmented through the use of the sumps inside the excavation area, or additional wells or well points as necessary during construction, at no additional cost to the Owner.

E. Ground water control operations shall be prosecuted and maintained 24 hours a day, 7 days a week. Qualified personnel shall be on-site at all times to monitor system operations and to perform maintenance as necessary to keep the system in operation. Provide a generator and all equipment necessary to provide a backup electrical power source in the event of a power service interruption.

F. Review available utility drawings and locate conduits and underground utilities in all areas where ground water control wells are to be drilled and installed. Notify local authorities prior to any drilling and place wells to avoid interference with the existing conduits and utilities. Repair damage to existing structures and utilities resulting from ground water control installations at no additional cost to the Owner.

G. Maintain temporary drainage facilities of adequate size, with standby pumps and adequate back-up power for emergency use, to collect and dispose of water which enters excavations.

H. Accomplish groundwater control in accordance with reviewed submittals. Keep the Engineer advised, in writing, of changes made to accommodate field conditions.

I. Perform groundwater control operations in a manner that will protect existing structures, bridge abutments, creek bank, and utilities. The Contractor shall be solely responsible for preventing damage to buildings, bridge abutments or other structures; and appurtenances, sewers, other utility installations, pavements, sidewalks, and other property that may result from Contractor's groundwater control operations.

J. The Contractor shall monitor the observation wells and piezometers around and within the excavations in accordance with requirements in Section 02015, Geotechnical Instrumentation, to determine the extent of drawdown in the overburden and/or depressurization inside and outside the excavations. Groundwater and piezometric levels within the excavation shall be controlled in accordance with the specified performance requirements of this Section.

K. The Contractor shall repair to the satisfaction of the Engineer, and at no cost to the Owner, damage to adjacent properties and facilities resulting from the groundwater control operations.

L. The Contractor is responsible for continuous control of water and safety of excavations at all times during the course of construction, including weekends and holidays and during periods of work stoppages. Method of dewatering operations shall be in compliance with all applicable federal, state and local laws, regulations and requirements as well as federal, state and local discharge turbidity requirements, to be by whatever means necessary and in conformance with all applicable local and state regulations. All work of this section shall comply with all applicable OSHA standards.

M. Maintain groundwater level at such an elevation that the uplift pressure on completed portions of structures does not exceed 80 percent of the downward pressure produced by the dead load of the structure plus backfill in place.

N. Divert surface run-off away from excavations. Surface water control measures, including dikes, ditches, sumps, and other methods shall be constructed to positively prevent flow of surface water into excavations, or onto roadways, or walkways.

O. Prior to making excavations below groundwater levels, the groundwater control system shall be installed in the area of initial excavation and operated sufficiently, as determined by the Engineer, to demonstrate the suitability of the equipment. The system shall be modified, if required, at no additional cost to the Owner.

P. If there are indications of a hydraulic gradient causing uncontrolled flow or seepage, or ground instability, the Contractor shall increase the capacity of the groundwater control system, undertake a grouting program to control or limit seepage, or take other supplementary measures to reduce hydraulic gradients immediately adjacent to the excavations.

Q. Install remedial groundwater recharge wells, cut-off grouting and/or groundwater cutoff walls, as necessary, in accordance with reviewed submittals to limit groundwater drawdown outside of excavations to avoid damage to nearby structures and utilities.

R. All dewatering operations shall use the best management practices in order to avoid the entrainment of sediment in the discharge water; discharges that would result in turbid water shall be filtered prior to discharge to any local sewer, receiving wetlands, waterways, or upland areas; discharge of dewatering effluent in these areas must be performed in a manner that will not result in soil erosion due to the velocity and duration of such discharges.

S. The Contractor shall accept sole responsibility for any damage suits or claims resulting from his dewatering operations and warranties the performance of the dewatering system.

3.02 FIELD QUALITY CONTROL

A. Tests:

1. The Contractor shall collect samples of the groundwater discharge and submit samples for analysis in accordance with the requirements of the New York State Department of Environmental Conservation, OCDWEP Groundwater Discharge Permit, and all federal, state and local regulations and requirements. Analytical results shall be distributed to the Engineer.

2. Construction observation wells and piezometers (including existing observation wells and piezometers installed by the Owner which are shown on the Contract Drawings) utilized by the Contractor for monitoring the performance of its groundwater control system shall be monitored by the Contractor and data shall be provided to the Engineer within 48 hours.

3. Test groundwater from dewatering activities in accordance with Special Project Condition P-013(3) and submit data to Engineer within 24 hours after it is obtained.

B. Inspection:

1. The Engineer will observe Contractor's compliance with dewatering specifications.

3.03 REMOVAL OF SYSTEMS

A. When groundwater control is completed, remove all elements of groundwater control system to the extent practical. Restore points of entry to existing drainage facilities to pre-construction conditions.

B. Dewatering wells are to be tremmie grouted from the bottom to the upper casing either with the well in place, or if the well screen is overdrilled, in the overdrilled boring.

END OF SECTION

SECTION 02170

TEMPORARY EXCAVATION SUPPORT

PART 1 - GENERAL

1.01 WORK INCLUDED

A. The work specified in this Section includes requirements for excavation and support of temporary open trench and structure excavations for installation of the work of the Contract by cut-and-cover construction methods.

B. Design, furnish, install, and maintain temporary excavation support systems as required to provide lateral support, prevent loss of ground, limit soil movements to the allowable limits indicated in Section 02015 Geotechnical Instrumentation, and protect the following existing and proposed third parties from damage: pipelines, utilities, structures, roadways, and other facilities.

The location, configuration, design, construction and maintenance of the excavation support systems shall be the sole responsibility of the Contractor.

C. The Contractor shall be responsible for sizing the excavations subject to approval by the Engineer.

D. Temporary excavation support systems to be used on this project include singular or multiple stages of internally braced continuous steel sheeting. Within 25 feet of existing building walls, vertical support elements such as sheeting shall be drilled or hydraulically pushed in place. At excavation locations along the alignment greater than 25 feet from existing building walls, vibratory methods of installation may be acceptable provided the Contractor can demonstrate that the installation method will not damage adjacent third parties. Impact methods of installation will not be allowed.

E. Construction of temporary excavation support systems shall not disturb existing structures, facilities or the work of the Contract. Should damage occur during construction the Contractor, at no additional cost to the Owner, shall repair damage.

F. The Contractor shall bear the entire cost and responsibility of correcting any failure, damages, subsidence, upheaval or cave-ins as a result of improper installation, maintenance or design of the temporary excavation support systems. The Contractor shall pay for all claims, costs and damages that arise as a result of the work performed at no additional cost to the Owner.

G. If, in the judgment of the Engineer, the performance of the excavation support system exceeds the limiting values listed in Section 02015, the Owner may instruct the Contractor to stop work and implement remedial measures to arrest further movements. The Contractor shall take immediate steps to implement the remedial measures at no additional cost to the Owner.

H. Temporary excavation support systems shall be designed and installed in accordance with OSHA excavation safety standards.

1.02 RELATED WORK

A. Section 02015 - Geotechnical Instrumentation

B. Section 02140 - Dewatering

C. Section 02300 - Earthwork

1.03 REFERENCE SPECIFICATIONS, CODES, AND STANDARDS

A. American Society for Testing and Materials (ASTM)

1. ASTM A36 - Specification for Structural Steel Standard Specifications

2. ASTM A572 - Specification for Structural Steel Standard Specifications

B. American Welding Society (AWS)

1. AWS D1.1 for Public Works Construction

C. Codes

1. U.S. Occupational Safety and Health Administration (OSHA) Regulations, 29 CFR Part 1926 Subpart P - Excavations.

D. Where reference is made to one of the above standards the revision in effect at the time of the bid opening shall apply.

1.04 SUBMITTALS

A. Shop Drawings: Submit the following in accordance with the provisions set forth in the Special Project Conditions, General Provisions, and General Specifications.

1. Submit the following qualifications three weeks prior to the construction:

a. Qualifications of Contractor's temporary excavation support system designer.

b. Qualifications of Contractor's temporary excavation support system installer.

2. Submit a Temporary Excavation Support Plan stamped and signed by a Professional Engineer licensed and registered in the State of New York at least two weeks prior to start of the construction. Submit design calculations for review by the Engineer and third parties for an overall understanding of the project relating to access, maintenance of existing facilities and proper utilization of the site. The Contractor shall remain responsible for the adequacy and safety of the means, methods and sequencing of construction. The plan shall include the following items as a minimum:

a. Vibratory-driven, drilled or hydraulically pushed in place excavation support system, details, location, layout, depths, extent of different types of support relative to existing features and the permanent structures to be constructed, and methods and sequence of installation and removal. Indicate sizes, shapes, and material specifications for all support elements including filter fabric, if used.

b. Requirements of dewatering during the construction in accordance with Section 02140. Provide details of working slab, subdrains and sump construction where applicable.

c. Minimum lateral distance from the edge of the excavation support system for use for vehicles, construction equipment, and stockpiled construction and excavated materials.

d. Details of materials handling, stockpiling, and disposal sites for excavated materials.

e. List of equipment used for installing the excavation support systems.

f. Provide an estimate of anticipated lateral and vertical deformation of the excavation support systems at each excavation stage.

3. Submit a Construction Contingency Plan specifying the methods and procedures to maintain excavation support system stability if the allowable movement of the adjacent ground and adjacent structures is exceeded.

4. For excavation support systems left in place, submit the following as-built information prior to backfilling and covering the excavation support systems:

a. Survey locations of the temporary excavation support system, including coordinates of the ends and points of change in direction.

b. Type of the temporary excavation support system.

c. Elevation of top and bottom of the support system left in place.

1.05 QUALITY ASSURANCE

A. Conform to the requirements of the OSHA Standards and Interpretations: "Part 1926 Subpart P - Excavation, Trenching, and Shoring", and all other applicable laws, regulations, rules, and codes.

B. All welding shall be performed in accordance with AWS D1.1.

C. The Contractor shall submit for review a Temporary Excavation Support Plan (including design calculations and drawings for all proposed temporary excavation support systems) prepared by a Professional Engineer registered in the State of New York and having the following qualifications:

1. Not less than five years experience in the design of steel sheeting temporary excavation support systems of at least 25 feet deep in urban areas of comparable type, size, and complexity as this project.

2. Completed not less than five successful steel sheeting temporary excavation support system projects of comparable type, size, and complexity as this project within the last five years.

D. Temporary Excavation Support System Installer's Qualifications:

1. Not less than five years experience in the installation steel sheeting temporary excavation support systems of at least 25 feet deep in urban areas of comparable type, size, and complexity as this project.

2. Completed not less than five successful steel sheeting temporary excavation support system projects of comparable type, size, and complexity as this project within the last five years.

E. Install all temporary excavation support systems under the supervision of a supervisor having the following qualifications:

1. Not less than five years experience in installation of steel sheeting temporary excavation support systems of at least 25 feet deep in urban areas of comparable type, size, and complexity as this project.

2. Completed at least five successful steel sheeting temporary excavation support system projects of comparable type, size, and complexity as this project within the last five years.

1.06 DESIGN CRITERIA

A. Design of temporary excavation support systems shall meet the following minimum requirements:

1. Support systems shall be designed for earth pressures, hydrostatic pressure, equipment, traffic, temporary stockpiles, construction loads, and other surcharge loads.

2. Design internal bracing to provide sufficient reaction to maintain stability.

3. Limit movement of ground adjacent to the excavation support system to be within the allowable ground deformation as specified in Specification Section 02015.

4. Design the embedment depth below bottom of excavation to minimize lateral and vertical earth movements, provide bottom stability and control ground water.

5. Design temporary excavation support system shall withstand an additional 2 feet of excavation below proposed bottom of excavation without redesign except for the addition of lagging and bracing.

1.07 DELIVERY, STORAGE AND HANDLING

A. Store sheeting and bracing materials to prevent sagging. Keep concentrated loads, during storage and handling, to levels below those that would produce permanent deformation of the sheeting and bracing materials.

1.08 SAFETY

A. Method of construction shall be such as to ensure the safety of the work, project participants, the public, third parties, and adjacent property, whether public or private. All work shall conform to the requirements of all Federal, State, and local laws and regulations. The Contractor is solely and completely responsible for maintaining safe work conditions at the site at all times.

B. Refer to Special Project Conditions Section P-012 and General Provisions Section G-1.08 for additional safety requirements.

1.09 GROUND CONDITIONS

A. The work will be performed through subsurface conditions which have been investigated for the purpose of developing assumptions about ground conditions. Both a Geotechnical Data Report (GDR) and Geotechnical Baseline Report (GBR) have been prepared based on this information.

B. The primary objective of the GDR is to present the results of geotechnical investigations conducted for the project in a factual manner. These results include descriptions of field and laboratory investigations performed and procedures used, background physiography, regional geology information, and summaries of site subsurface conditions.

C. The primary objectives of the GBR are to present the interpretation of subsurface conditions; to discuss the basis of geotechnical design and construction; and to set baselines for geotechnical conditions expected to be encountered during construction.

PART 2 - PRODUCTS

2.01 MATERIALS

A. Structural Steel

All sheet piles, wales, rakers, struts, and all other steel shall conform to ASTM A36 and A572, GR. 50.

B. Filter Fabric

Fabric used behind support systems shall meet the requirements specified in Section 02270, Geotextile Fabric.

C. Other Materials

Tamping tools adapted for backfilling voids after removal of the excavation support system.

PART 3 - EXECUTION

3.01 GENERAL

A. Installation of the temporary excavation support system shall not commence until the Engineer has reviewed the related earth excavation and dewatering submittals with all Engineer's comments satisfactorily addressed.

B. Install excavation support system in accordance with the Contractor's Temporary Excavation Support Plan.

C. Carry out program of temporary excavation support in such a manner as to prevent undermining or disturbing foundations of existing structures of work ongoing or previously completed.

D. Perform preparatory work to discover, protect, maintain and restore, or remove utilities, foundations or other facilities located in close proximity of the proposed excavation lateral support system.

E. Conduct pre-excavation as necessary to remove obstructions and identify existing utilities along the alignment of the excavation lateral support system that will interfere with installation.

F. The Contractor shall provide fully equipped rig(s) and appropriate tools in full-time operation at the site during the work, and shall mobilize additional equipment, if necessary, to complete the work on schedule.

G. Excavation shall not proceed more than 2- ft below each bracing level, until that bracing level has been completely installed, including prestressing.

H. In event of the measured movements approaching or exceeding the allowable movements indicated in Specification Section 02015 - Geotechnical Instrumentation, the Contractor shall take immediate steps to implement the Construction Contingency Plan to arrest further movement.

I. If existing utilities interfere with the temporary excavation support system, the Contractor shall alert the Engineer immediately.

3.02 STEEL SHEETING

A. Length Markings: Before installation is started each steel section shall be marked so that the depth of the tip can be readily determined.

B. Install sheeting at the locations shown on the Contractor's Temporary Excavation Support Plan. Install sheeting before starting excavation. Install sheeting to the design tip elevation shown on the Contractor's reviewed Temporary Excavation Support Plan. The Contractor shall take all precautions against excessive vibrations in all areas. The Contractor shall be solely responsible for any damages caused directly or indirectly to structures, sewer and other utilities, and shall repair any such damage occurring due to his operations to the satisfaction of the Owner.

C. All sheeting shall be protected from damage during installation.

D. Voids that occur outside the sheeting shall be filled immediately with compacted structural fill, NYSDOT 304.12 subbase as specified in Specification Section 02230 Selected Fill.

E. Requirements for the sheeting include the following:

1. Install sheeting in the plumb position.

2. Install sheeting such that the piling is in direct contact with the material to be retained.

3. Install sheeting to the depths indicated on the Contractor's Temporary Excavation Support Plan.

4. Methods and equipment used in pushing, setting, cutting and splicing shall conform to approved submittals.

5. Use templates or other temporary alignment facilities to maintain piles plumb and on line.

6. Control vibrations and noise associated with installation.

7. Pre-excavate as necessary to remove existing structures along alignment of the sheeting.

8. Sheeting shall be positioned within 3 inches of the design plan location along its length from top down to bottom of excavation grade. Design plan locations are to be established by the Contractor's Professional Engineer and submitted to the Engineer for review.

F. The Contractor shall provide all inspection equipment to determine whether the sheeting has been started in their planned location, are vertical, and are within the allowable tolerance for position after installation.

3.03 INTERNAL LATERAL WALL BRACING (WALES AND STRUTS)

A. Use wales and struts as necessary to provide support of the excavation lateral support walls as required. Include web stiffeners, plates, brackets, or angles as required to prevent rotation, crippling or buckling of connections and points of bearing between structural steel members. Allow for eccentricities due to fabrication and assembly. Consider effects of temperature changes.

B. Install and maintain all support members in continuous tight contact with each other and with the wall being supported.

C. Coordinate locations of all bracing and components thereof for temporary lateral excavation support with locations of permanent structures.

D. Control rate of excavation and installation of support members to minimize movement of adjacent ground surface.

E. Excavation shall proceed in accordance with the detailed sequence submitted by the Contractor and reviewed by the Engineer. It shall be the responsibility of the Contractor to schedule and sequence the work accordingly.

3.04 GROUNDWATER CONTROL

A. Provide ground water control in accordance with accepted shop drawings and Specification Section 02140, Dewatering. Advise the Engineer of any changes made to accommodate field conditions and, on completion of system installation, revise and resubmit shop drawings.

B. Maintain the ground water level at least two feet below the base of excavations until no danger to the excavations can occur because of ground water inflows or the buildup of hydrostatic pressure in accordance with Section 02140. .

C. Maintain existing surface drainage conditions in all areas affected by excavations.

D. Dispose of all water removed for ground water control and removed from excavations in accordance with Section 02140 - Dewatering. Dispose of contaminated ground water in accordance with Federal and local authority regulations.

3.06 DISPOSAL OF EXCAVATED MATERIALS

A. Remove and dispose of all excavated materials in accordance with Section 02300, Earthwork.

B. Dispose of impacted materials in accordance with Specification Sections 02120 and 02224.

C. Temporary stockpiling, if allowed, shall be as stated in the Temporary Excavation Support Plan per approved submittal required by Subsection 1.04(A)(2) herein.

3.07 EMERGENCY MEASURES

A. Whenever there is a condition that is likely to endanger the stability of the excavation or adjacent structures, the contractor shall operate with a full crew 24 hours a day, including weekends and holidays, without intermission, until conditions no longer jeopardize the stability of the work. Emergency operations that cannot be traced to unforeseen ground conditions will be conducted at no further cost to the Owner.

3.08 REMOVAL OF EXCAVATION SUPPORT SYSTEM

A. Unless ordered by the Engineer, all excavation support systems may be removed by the Contractor. The Contractor shall take all precautions against excessive vibrations. The Contractor shall be solely responsible for any damages caused directly or indirectly to the work of the Contract, existing structures, sewer and other utilities, and shall repair any such damage occurring due to his operations to the satisfaction of the Owner and the property owner.

B. All voids created by the removal of the support system shall be immediately filled with compacted structural fill, lean concrete, or controlled low strength material, as approved by the Engineer. The support system removed from the excavation shall remain the property of the Contractor and shall be removed from the site.

C. Where vertical members of the excavation support system are ordered to be left in place by the Engineer, the Contractor shall remove the top 5 feet of the vertical members, unless otherwise approved by the Engineer.

3.09 RESTORATION

A. Furnish, compact, and backfill all excavations in accordance with Specification Section 02300. Prepare the bottom of excavations as a foundation for installing pipe and structures in accordance with Specification Section 02300.

END OF SECTION

SECTION 02190

MAINTENANCE OF SEWER FLOWS

PART 1 GENERAL

1.01 DESCRIPTION

This Section includes all materials, labor, and equipment necessary to obtain, install, maintain, operate, and remove sewage bypass systems (including bypass pumping systems and gravity bypass systems) necessary to perform the work of this Contract, including, but not limited to:

A. Mobilization and demobilization
B. Type and capacity of bypass systems
C. Flow bypass plan requirements
D. Backup and standby equipment requirements
E. Installation, operation, and removal of bypass systems

1.02 Related Work Specified Elsewhere

A. Section 02530, Sewage and Drainage Piping Installation

1.03 BYPASS PLAN SUBMITTALS

A. The Contractor shall be required to document his plans for maintaining dry-weather and wet-weather flows in all cases where sewer flows are to be bypassed around work areas. A separate Bypass Plan shall be prepared and submitted for each and every instance where existing sewers are to be bypassed.

B. All Bypass Plans shall be subject to the Engineer's review prior to implementation. Bypass Plans shall be submitted for review a minimum of two weeks prior to proposed installation of the bypass system. No bypass operations may commence until the Bypass Plan has been received by the Engineer and reviewed to be complete and acceptable.

C. Separate Bypass Plans shall be prepared and submitted to cover each and every bypassing situation which may be encountered in the work. All Bypass Plans shall be designed by a licensed New York State Professional Engineer, and must fulfill all requirements detailed in this Section.

D. Bypass Plans shall, at a minimum, document the following:

1. General plan detailing bypass systems for conveyance of peak dry-weather and peak wet-weather flows to downstream sewers without unregulated overflow to surface waters or the environment (except as described in Section 1.03.D.2) and without increasing surcharge conditions within the upstream tributary sewers in excess of the existing surcharge levels and without causing damage to public and private property.

2. General plan detailing bypass systems for conveyance of combined sewer overflows (CSOs) to surface waters via existing CSO outfalls. CSOs shall be defined as sewer flows in excess of the capacity of existing flow regulators (i.e., weirs), which may be assumed to be equal to peak dry-weather flows listed in Section 1.06.A. CSOs to surface waters may only occur at the following existing regulated CSO outfall locations:

   - CSO 044 outfall (South Avenue), shown on Contract Drawing G-6

3. Sewer plugging plan including type, location, and manufacturer's information for sewer plugs.

4. Bypass Systems

   a. Bypass Pumping Systems

      i. Number, type, and capacity of proposed primary and standby pumps. Note that all pumps shall be electrically powered.

      ii. Schematic drawings documenting the arrangement of the bypass pumping system including pumps, pump sizes, pump locations, size and type of piping, and configuration of pumps and piping, including suction and discharge lines, locations and types of sewer plugs.

      iii. Scheduling information on intended bypass system, including installation, testing, operation, and restoration of normal sewer flow.

iv. Expected capacity of bypass system as installed with supporting calculations.

v. Noise attenuation provisions.

vi. Cold weather operational plan to protect equipment and pipes from freezing, including provisions to remove water that is trapped in low spots of suction or discharge piping.

vii. Alarm systems that allow prompt determination of loss of bypass pumping system integrity during operation.

viii. Schedule for routine inspection of bypass pumping system.

ix. Schedule for required maintenance activities on pumping equipment.

b. Gravity Bypass Systems

i. Pipe type, sizes, and connection methods to be used.

ii. Plans and profiles depicting the location, routing and slope of proposed gravity bypass systems.

iii. Scheduling information on intended bypass system, including installation, operation, and restoration of normal flow.

iv. Expected capacity of bypass system as installed with supporting calculations.

v. Bulkhead or connection detail at connection between bypass gravity system and the existing sewer for each connection. Identify method to ensure a water tight connection.

c. The Engineer's receipt of Bypass Plan submittals does not relieve the Contractor for means, methods, and sequences of construction, requirements to maintain all sewer flows, and for safety of the operation.

1.04 BYPASS OPERATION RECORDS

A. The Contractor shall maintain and provide to the Engineer at completion of each and all bypass operations records of the following:

1. Dates of installation, operation and removal of bypass systems.

2. Maintenance conducted on all equipment used in bypass systems.

3. If applicable, dates, times, and quantities of flows that exceeded the capacity of the bypass system.

4. If applicable, dates and times of any backups of flow into private property and corrective actions taken.

5. If applicable, dates of public complaints and resulting corrective actions taken.

1.05 GENERAL BYPASS SYSTEM PERFORMANCE REQUIREMENTS

A. All Bypass Systems shall be designed, installed, operated, and maintained in full accordance with the following requirements:

1. In the course of bypass operations, it will be necessary to connect into and disconnect portions of the existing sewer system. This work shall be planned to cause the least interference possible with the existing facilities and shall be done at a time when the demands on the facilities best permit such interference. Since minimum sewage flows typically occur during the night hours, it may be necessary to work outside of normal working hours to meet these requirements; however, prior approval must be obtained from the Engineer and owner of the sewer system. In such cases, all work must be conducted in accordance with all appropriate local ordinances.

2. Conveyance of Flows

a. It is the Contractor's responsibility to convey all dry-weather and wet-weather flows that are currently conveyed by the sewer pipes being bypassed, except as described in Section 1.03.D.2. The Contractor shall use bypass pumping systems, gravity bypass systems or a

combination of the two to convey flows through closed conduits to downstream sewers without discharge to the environment and without increasing surcharge conditions within the upstream tributary sewers in excess of the existing surcharge levels and without causing damage to public and private property.

b. In the case of existing regulated CSOs identified in Section 1.03.D.2, the Contractor shall configure the bypass system to provide flow splitting characteristics equivalent to the existing flow regulator. CSOs may only be discharged to surface waters via existing CSO outfalls, and only when the capacity of the flow regulator is exceeded. The bypass system shall convey all flows without increasing surcharge conditions within the upstream tributary sewers in excess of the existing surcharge levels and without causing damage to public and private property.

c. The Contractor shall provide required bypass systems to accomplish these bypasses as required to complete the work of the Contract including materials, equipment, and labor.

3. It is essential that there be no interruption in the sewer flow during the Contractor's work operations. Flow must be maintained to the capacity of the existing system being bypassed. To accomplish this, the Contractor shall provide, maintain, and operate all temporary facilities, including but not limited to pumping equipment (including standby pumps), piping, dams, plugs, conduits and all other equipment, materials, and labor necessary to handle the dry-weather and wet-weather flows (including CSOs as described in Section 1.03.D.2), and convey them past the work to the appropriate facilities downstream of his work.

B. Bypass System Requirements - Bypass Pumping Systems

1. Each bypass pumping system shall consist of primary pump(s) capable of conveying the required sewer flows. In addition, a minimum of one standby pump, equal in capacity to the largest primary pump utilized in bypass pumping operations, shall be provided. The standby pump shall comply with all

requirements applicable to the primary pump(s). The standby pump shall be on site and fully ready for operation and either be connected into the bypass system as installed, or otherwise be ready for immediate connection.

2. The Contractor shall convey pumped sewage flows in closed conduit, leak-proof piping.

3. Each bypass pumping system must successfully demonstrate its ability to bypass sewer flows prior to initiating work. No sewer removal work will begin until the capability of the bypass pumping system is successfully demonstrated to the Engineer for a minimum of 60 minutes.

4. Provisions must be made for traffic maintenance. Bypass pumping system piping shall be routed and protected from damage by traffic or construction activities prior to initiating pumping.

5. All features associated with bypass pumping systems, including but not limited to pumps, piping, connections, and electrical services shall be provided at no additional cost to the Owner.

6. Noise Suppression

   a. The Contractor shall equip all pump motors to minimize the generation of noise. Refer to the Special Project Conditions and General Specifications.

   b. The Contractor shall utilize sound enclosures on all pumps used as primary pumps.

   c. The Contractor shall utilize sound enclosures on all secondary pumps that must run outside of normal working hours as identified in the Special Project Conditions and General Specifications.

7. The design of the bypass pumping system must allow for prompt dewatering of the system during periods of non-use if leakage or freezing conditions occur or may occur.

8. The Contractor shall be responsible for thrust restraint of all bypass pumping system piping.

9. The Contractor shall be required to provide and maintain a temporary wet well or sump as required for proper operation of the bypass pumping system.

C. Bypass System Requirements - Gravity Bypass Systems

1. The Contractor shall maintain sewage flows in the existing sewer system using closed conduit, leak-proof bypass sewers. It may be necessary to reuse, repair, replace or relocate portions of the existing sewer system on a temporary basis to maintain flows; such work shall be undertaken at no additional cost to the Owner.

2. Piping used in gravity bypass systems shall, at a minimum, match the largest sizes of the pipes which are being replaced.

3. All features associated with installation of the gravity bypass systems including, but not limited to, excavation and rock removal beyond the limits of excavation for the work of the project, mass concrete, and pipe components, shall be provided at no additional cost to the Owner.

4. The Contractor shall be responsible for thrust restraint of all gravity bypass system piping.

1.06 EXISTING FLOW INFORMATION

A. The following table provides the best estimates of peak dry-weather and peak wet-weather flows in major sewers, which may require bypassing to complete the work of the project. This information is provided to assist the Contractor in planning bypass operations and developing bypass systems. The Contractor is alerted that the majority of the sewers are combined sewers and are therefore subject to significant increases in flow during wet-weather and that no guarantee is made that the flows listed below represent maximum flows that will be encountered in any bypassing situation. During wet-weather conditions, these sewers may currently operate under surcharged conditions. The Contractor shall make his own investigations to verify actual flow conditions in the existing sewer system.

Combined Sewer(Unless Noted)	Diameter (inches)	Estimated Peak Dry Weather Flow (mgd)	Estimated Peak Wet Weather Flow (mgd)
West Castle Street at intersection of Dearborn Place	12	0.1	2.2
South Avenue south of West Castle Street	44*	9.4	52.0

mgd = million gallons per day
* CSOs, as described in Section 1.03.D.2, may be allowed from these combined sewers.

PART 2 PRODUCTS

2.01 BYPASS PUMPING SYSTEMS

A. All pumps used shall be fully automatic self-priming units that do not require the use of foot valves or vacuum pumps in the priming system. The pumps shall be electric powered. All pumps must be constructed to allow dry running for long periods of time to accommodate the cyclical nature of discharges.

B. The Contractor shall provide the necessary electrical services and start/stop controls for each pump and provide necessary security to prevent vandalism or unauthorized access to the pump controls and bypass pumping system.

2.02 BYPASS GRAVITY SYSTEMS

A. Piping materials used in bypass gravity systems shall be in accordance with the applicable specification section of these Contract Documents.

B. The Contractor shall provide the necessary security to prevent vandalism or unauthorized access of the bypass gravity system.

PART 3 EXECUTION

3.01 PREPARATION

A. Precautions

1. The Contractor is responsible for locating any existing utilities in the area selected for installation of the bypass systems and shall minimize the disturbance to existing utilities. All costs associated with the relocation of utilities for the purpose of installing the bypass systems shall be at no additional cost to the Owner.

2. During all bypass operations, the Contractor shall protect the bypass systems and existing sewer systems from damage inflicted by operation or failure of equipment or bypass system components. The Contractor shall be responsible for all intentional or accidental physical damage to the bypass system caused by human interference or mechanical failure.

3. During the installation of bypass systems, the Contractor shall make every effort to minimize the disruption of public and private property and the inconvenience to neighborhood residents and commercial establishments. The Contractor shall protect all vegetation and structures or other obstacles in the path of the bypass systems from damage through the use of shields and buffering devices. All private property that must be relocated to construct the work must be stored at a location acceptable to the Engineer and property owner. In instances where fences must be disturbed for the construction and installation of the bypass systems, the property owner shall be consulted to determine if the installation of temporary fencing shall be required. Preconstruction videotapes shall be produced by the Contractor to document the preconstruction condition of the proposed bypass system location in accordance with the Contract Documents. The Contractor is solely responsible for coordinating all bypass system components with any and all impacted private property owners. The Contractor shall notify the Engineer if any private property owners will be impacted by the bypass operations.

4. The Contractor shall furnish the following extra materials and maintain them on site for immediate usage:

   a. Spare parts for pumps and piping as recommended by the manufacturer.

   b. If standby pumps are not connected into the bypass pumping system as installed, adequate hoisting equipment for each standby pump shall be provided.

3.02 ROUTINE INSPECTION AND MAINTENANCE

A. The Contractor shall inspect all operable bypass pumping systems and gravity bypass systems at least every two hours to ensure their proper operation.

B. Bypass pumping systems shall be manned 24-hours per day by a qualified representative of the Contractor, familiar with pump operations and emergency procedures.

C. The Contractor shall inspect all operable bypass pumping systems and gravity bypass systems at the onset of increased flows associated with wet-weather events (including snow melt events) and as necessary to ensure their proper operation.

D. The Contractor shall ensure that the bypass pumping systems and gravity bypass systems are properly maintained and operational.

3.03 OPERATION

A. The Contractor shall verify that flow conditions within the existing sewer are steady and not increasing or surcharged prior to beginning any bypass work.

B. All bypass systems, including all connections, shall be leak proof and watertight.

C. If and only in the event of an emergency it becomes necessary to utilize an unpiped gravity flow path through the work area into the existing sewer system, the Contractor shall take all precautions to prevent the entry of debris into the sewer system. The Contractor shall be responsible for the removal of any debris that enters the sewer system.

D. The Contractor shall be responsible for obtaining any approvals for placement of the equipment or piping systems within public rights-of-way from the City of Syracuse.

E. Throughout all bypass operations, the Contractor shall conduct his activities such to:

1. Prevent sewage releases into surface waters or open trenches (except CSOs, in accordance with Section 1.03.D.2).

2. Prevent intrusion of surface water into the sewer system.

3. Prevent intrusion of groundwater into the sewer system.

3.04 INSTALLATION AND REMOVAL

A. When plugging or blocking is no longer needed for performance and acceptance of work, it shall be removed in such a manner as to prevent surging or cause major disturbances in downstream sewers.

B. Upon completion of the bypass system operations and after receipt of written permission from the Engineer, the Contractor shall remove all bypass system components and restore all property to pre-construction conditions or better and shall restore all pavements, including driveways and sidewalks.

C. Bypass systems shall be flushed with clean water prior to dewatering and disassembly. All rinse water shall be directed to the sewer system.

END OF SECTION

SECTION 02222

CONTROLLED BLASTING

PART 1 GENERAL

1.01 GENERAL PROVISIONS

A. Section includes:

1. The work to be done under this Section includes furnishing all labor, equipment, materials and services and performing operations required to fragment and excavate materials classified as rock using controlled blasting procedures specified herein, such that damage is prevented to adjacent pipes, structures, property and work, such that damage is minimized to adjacent rock, and such that resulting ground vibrations and air blast overpressures are consistently maintained below the maximum levels specified in this Section. This section shall apply to the use of explosives to fragment cemented sand and gravel which may be encountered, if other reasonable means have been attempted and are unsuccessful in fragmenting and removing it.

2. Protecting existing structures, adjacent property, workers, and the general public from damage or injury from improper handling of explosives, flyrock, excessive ground vibrations and/or excessive air blast overpressure levels.

3. Furnishing, installing, and implementing an audible warning system to indicate impending blasting and familiarizing workers and the Engineer with the system implemented.

1.02 RELATED SECTIONS

The relative and applicable information contained in the following:

A. Section 02015 - Geotechnical Instrumentation

B. Section 02170 - Temporary Excavation Support

C. Section 02300 - Earthwork

1.03 SYSTEM DESCRIPTIONS

A. Definitions:

1. Common Earth Material is defined in Section 02300-1.04(B)(1).

2. Rock is defined in Section 02300-1.04(B)(2).

1.04 QUALITY ASSURANCE

A. Qualifications:

1. Persons responsible for blasting shall be licensed blasters in the State of New York and shall have had acceptable experience in similar excavations in rock and controlled blasting techniques.

B. Pre-Blast Surveys:

1. The Contractor shall conduct pre-blast surveys of above ground structures within 250 ft of any blasting work, in addition to all structures included in Specification Section 01323. Pre-blast surveys shall include color audio-video records of these structures in accordance with Specification Section 01323.

2. The Owner may make a similar examination of any properties or structures.

C. Codes, Permits and Regulations:

1. The Contractor shall comply with all applicable laws, rules, ordinances and regulations of the Federal Government, the State of New York, and the City of Syracuse governing the transportation, storage, handling and use of explosives. All labor, materials, equipment and services necessary to make the blasting operations comply with such requirements shall be provided without additional cost to the Owner.

2. The Contractor shall obtain and pay for all permits and licenses required to complete the work of this Section.

3. In case of conflict between regulations or between regulations and Specifications, the Contractor shall comply with the strictest applicable codes, regulations, or Specifications.

D. Blasting Limit Criteria:

1. Existing Above Grade Structures:

a. Peak Particle Velocity Limits - At existing residential structures and other buildings near the site, the maximum Peak Particle Velocity (PPV) shall not exceed the limits indicated on Figure 1 (utilizing the curve for plaster construction) below, which is the Safe Limits for Residential Structures recommended by the US Bureau of Mines.

b. Air Blast Overpressure Limit - The Contractor shall conduct all blasting activity in such a manner that the peak air blast overpressure measured at the location of the nearest above ground, occupied structure to blasts shall not exceed 0.013 psi, which is the safe limits for residential structures recommended by the US Bureau of Mines.

2. Below Grade Utilities - At existing below grade pipes or other utilities, the maximum Peak Particle Velocity (PPV) shall not exceed 2.0 in/sec, unless otherwise allowed by the Owner based on the type and nature of the pipeline and it's location. The Contractor shall also take precautions to ensure that the blasting does not cause ground heave or settlement at the location of nearby utilities. Any ground movement (heave or settlement) at the location of adjacent utilities shall not exceed ¼ inch.

3. The Contractor shall comply with the Blasting Limit Criteria during all blasting and rock excavation. Adjustments to the drilling and blasting program and procedures, to comply with the Blasting Limit Criteria, shall be made by the Contractor during execution of the work at no expense to the Owner.

E. Blast Monitoring:

1. An independent Engineer or Geologist, qualified by training and experience, shall be hired by the Contractor (the Contractor's Blasting Engineer). The Contractor's Blasting Engineer shall conduct blast vibration monitoring of every blast round during the conduct of construction. Monitoring shall include a minimum of three seismographs at the nearest adjacent structures.

2. If any below grade utilities are located within 40 ft of blasting, measurements of ground movement at the utility shall be made by the independent Engineer or Geologist, using precision level equipment, to ensure there is no heave or settlement greater than ¼ inch.

F. Blast Monitoring Reports:

1. Submit blast monitoring reports to the Engineer the same working day as the blasting.

G. The Contractor shall be completely responsible for all damages resulting from the blasting operations and shall, as a minimum, take whatever measures are necessary to maintain peak air blast overpressure and peak particle velocities within the specified limits. Modifications to blasting and excavation methods required to meet these requirements shall be undertaken at no additional cost to the Owner.

H. Airborne Dust and Noise Limits: The Contractor shall take precautions, such as the use of water, vacuums, and mufflers, to minimize noise and dust from air track drilling operations, and shall keep noise and airborne dust levels at off site residences below regulatory limits.

1.05 SUBMITTALS

A. Advance Submittal:

The Contractor shall submit the following information to the Engineer at least five business days prior to commencing drilling and blasting operations.

1. Sequence and schedule of blasting rounds.

2. Specifics of a typical blast round, including the following blast round details:

   a. Diameter, spacing, burden, depth, and orientation of each blast hole for each round design, including test blasts and production blasts.
   b. Nomenclature and amount (in terms of weight and number of cartridges) of explosives and distribution of charge to be used within each hole, on each delay, and the total for the blast.

   c. Nomenclature and type of detonators; delay pattern wiring diagram for the round: type and capacity of firing source, size, type and location of safety switches and lightning gap.

   d. Type and location of stemming to be used in holes.

   e. Calculations of anticipated vibration levels at the nearest adjacent structures.

2. Methods of matting or covering of the blast area in open excavations to prevent flyrock and excessive air blast overpressure.

3. Written evidence of the licensing, experience and qualifications of the blasters who will be directly responsible for the loading of each shot and for firing it.

4. Name and qualifications of the person(s) responsible for design and directing the blasting. This submittal shall document by project lists and samples of blasting round design calculations that the person has the required experience in controlling blast vibrations in blasting rounds of the type required on the project.

5. Details of an audible advance signal system to be employed at the job site as a means of informing workers, Engineer, Owner or its representatives, and the general public that a blast is about to occur.

B. Submittal During the Progress of the Work:

1. In the event that the Contractor's design round results in ground vibrations and/or air blast overpressures that exceed the blasting limit criteria specified in this Section, the Contractor shall immediately revise the round design appropriately and submit the revised round design to the Contractor's Blasting Engineer and to the Engineer for information.

2. Any review by the Engineer of blast designs and techniques shall not relieve the Contractor of responsibility for the accuracy, adequacy and safety of the blasting, exercising proper supervision and field judgment and producing the results within the blasting limits required by these Specifications.

3. The Contractor shall report to the Engineer and the Contractor's Blasting Engineer and Owner in writing all blasting complaints received by the Contractor within 24 hours of receipt. Each blast complaint report shall include the name and address of the complainant, time received, date and time of blast complained about, and a description of the circumstances which led to the complaint.

1.06 INDEMNITY

A. Notwithstanding full compliance with these Specifications, the Contractor shall be solely responsible for any damage, direct or indirect, arising from blasting and shall hold the Owner, Engineer, and their several consultants harmless from any costs, liens, charges, claims or suits, including the costs of defense, arising from such damage, real or alleged. The Owner, Engineer, and their consultants shall be additionally-named insured on any insurance policy covering blasting carried by the Contractor, and this requirement shall also be enforced on any subcontractor.

PART 2 PRODUCTS

2.01 EXPLOSIVES

A. No Ammonium Nitrate Fuel Oil (ANFO) shall be used. All explosives shall be in cartridges or other semi-rigid containers. Explosives shall be trenching type explosives which have high water resistance and are not sensitive to sympathetic detonation or dead pressing.

PART 3 EXECUTION

3.01 MINIMUM SAFETY PRECAUTIONS

A. Clearing the Danger Area Before Blasting: No blasting shall be permitted until all personnel in the danger area have been removed to a place of safety. A loud, audible, warning system, devised and implemented by the Contractor, shall be sounded before each blast. The Contractor shall familiarize all personnel on the project, and the Engineer with the implemented system. The danger area shall be patrolled before each blast to make certain that it has been completely cleared, and guards shall be stationed to prevent entry until the area has been cleared by the blaster following the blast.

B. Explosives shall be stored, handled and employed in accordance with federal, state, and local regulations.

C. No explosives, caps, detonators or fuses shall be stored on the site during non-working hours.

D. The Contractor shall be responsible for determining any other safety requirements unique to blasting operations on this particular site so as not to endanger life, property, utility services, any existing or new construction, or any property adjacent to the site.

E. No requirement of, or omission to require, any precautions under this Contract shall be deemed to limit or impair any responsibility or obligations assumed by the Contractor under or in connection with this Contract; and the Contractor shall at all times maintain adequate protection to safeguard the public and all persons engaged in the work, and shall take such precautions as will accomplish such end, without undue interference to the public. The Contractor shall be responsible for and

pay for any damage to adjacent structures resulting from work executed under this Section.

3.02 GENERAL BLASTING PROCEDURES

A. Blasting shall be limited to between the hours of 9:00 A.M. and 4:00 P.M. on weekdays. No blasting shall be conducted on weekends, holidays, or other weekday times unless prior written permission is received from the Engineer.

B. The Contractor shall notify the Engineer at least 48 hours before blasting operations are to commence, and at least 24 hours prior to recommencing blasting if operations are suspended for any reason.

C. The Contractor shall conduct blasting operations such that damage is prevented to adjacent structures, utilities, property and work, and such that peak particle velocity and air blast overpressure levels and ground heave do not exceed the maximum specified limits at the locations specified.

D. Blasting mats shall be used on each blast round detonated to prevent the throw of flyrock.

E. If rock below grade is shattered on account of holes having been drilled too deep or too heavy charges of explosives used or for any other reasons due to blasting, and if, in the opinion of the Owner's Representative, said shattered rock is unfit for foundation, the shattered rock shall be removed and the excavation refilled as required by the Owner's Representative at the expense of the Contractor.

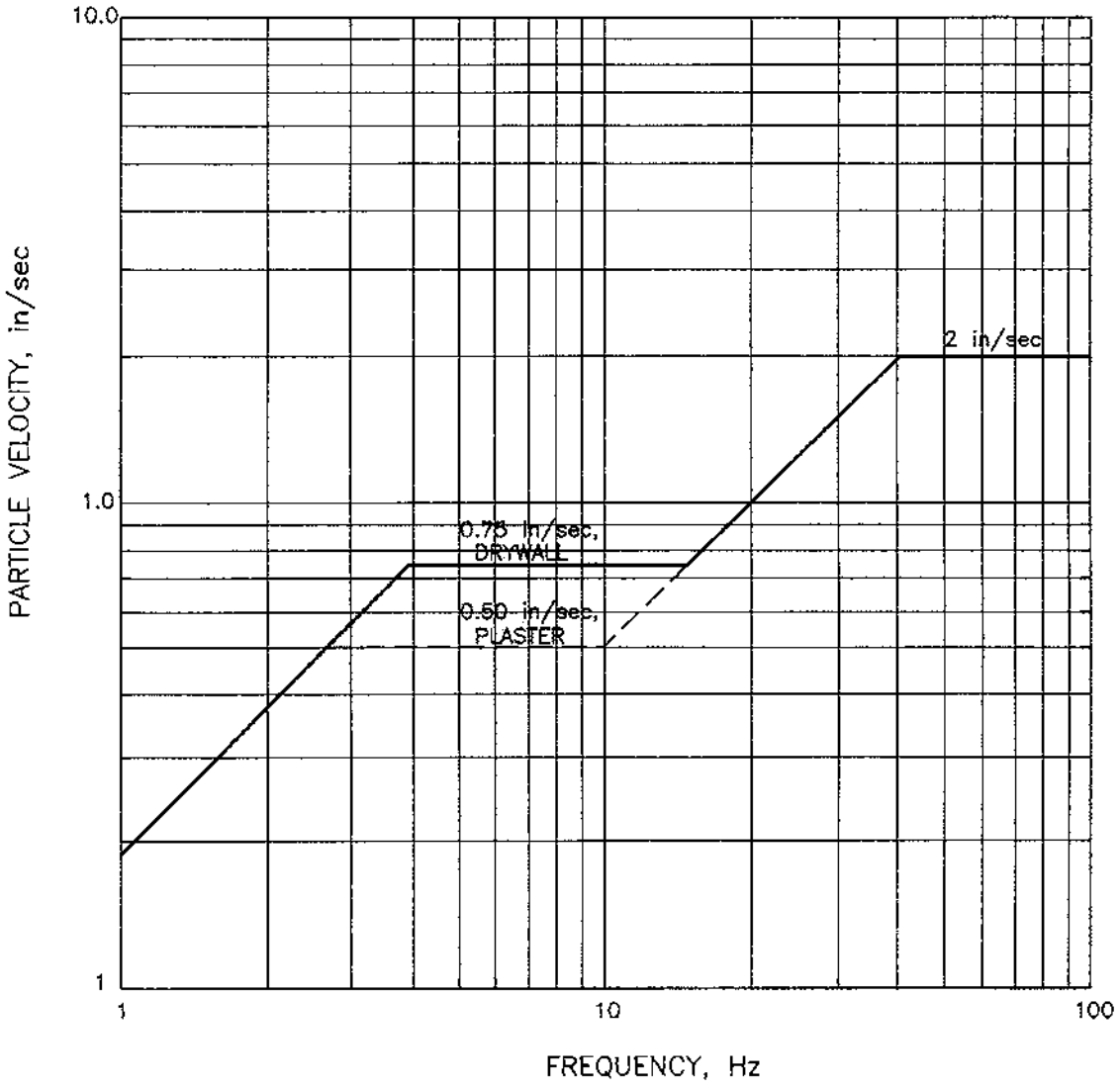

Figure 1 - Blasting Limit Criteria

END OF SECTION

SECTION 02224

IMPACTED MATERIAL HANDLING

PART 1 GENERAL

1.01 WORK INCLUDED

A. This section specifies the special requirements for identifying, sampling, testing, classifying, excavating, handling, staging, and disposal of excavated impacted material generated as a result of construction activities. Refer to Subpart 1.04.A for a definition of impacted material.

B. This Section applies to all areas where impacted material is encountered within the construction limits of the Project.

C. All impacted material handling, disposal, and associated work shall be performed in accordance with this Section and the Lake Improvement Project Construction Environmental Response Plan ("Environmental Response Plan"), included as Attachment A to this Material and Performance Section.

D. Related Work Specified Elsewhere

1. Section 02140 Dewatering
2. Section 02170 Temporary Excavation Support
3. Section 02300 Earthwork

1.02 HEALTH AND SAFETY PLAN

A. All contractors conducting work in areas that have the potential to contain impacted material shall prepare and utilize a Health and Safety Plan (HASP) meeting the minimum requirements of 29 CFR 1910.120 and the Special Project Conditions.

1.03 SUBMITTALS

A. Contractor's HASP. This submittal is for record purposes only and will not be returned to the Contractor.

B. Contractor's Community Air Monitoring Plan as detailed in Part 4.01(B) of this Section.

C. Contractor's proposed procedures for handling, staging, transporting and disposing of impacted material.

D. Contractor's proposed sampling and laboratory analysis procedures.

E. Name of proposed disposal sites and copies of the facility permits to accept the designated wastes.

F. Proposed impacted material staging areas.

G. Equipment decontamination procedures.

H. Waste manifest system.

I. Chain-of-custody records.

J. Bills of lading.

1.04 DEFINITIONS

A. Impacted material - Any excavated material encountered during construction activities that does not meet the definition of construction and demolition debris, as determined by visual inspection, monitoring equipment, and/or sampling and analysis.

B. Construction and Demolition (C&D) debris - Uncontaminated solid waste resulting from the construction, remodeling, repair and demolition of utilities, structures and roads; and uncontaminated solid waste resulting from land clearing (see definition in Attachment A - Lake Improvement Project Construction Environmental Response Plan).

1.05 REGULATIONS

A. Comply with applicable federal, state, municipal, and local regulations including, but not limited to, the following:

1. U.S. Environmental Protection Agency (EPA), including Title 40, Code of Federal Regulations.

2. Occupational Safety and Health Administration (OSHA), including Title 29, Code of Federal Regulations, and Parts 1910 and 1926, OSHA, U.S. Department of Labor.

3. State of New York Rules and Regulations, including 6 NYCRR Part 360, 364, and 370 regarding disposal, transportation, and hazardous waste management system.

4. Recommendations of the National Institute of Occupational Safety and Health (NIOSH).

5. Transportation regulations, including U.S. Department of Transportation regulations, including Title 29 Parts 171 and 172 and New York State Department of Transportation rules and regulations.

6. Applicable federal, state, and local government regulations.

7. Onondaga County Department of Water Environment Protection Procedures Governing Acceptance and Treatment of Groundwater and Other Contaminated Waste.

8. New York State Department of Environmental Conservation - Technical and Administrative Guidance Memorandum Number 4060 (TAGM 4060).

B. Disposal sites for all wastes shall be appropriately permitted by the New York State Department of Environmental Conservation (NYSDEC) to accept such material.

C. Whenever there is a conflict or overlap of the above references, the most stringent provision shall be applicable.

D. In the event that any requirement of this Section contradicts any such regulatory requirement, immediately notify the Owner of such conflict or contradiction. In such cases, the regulation or law shall apply.

E. Post all applicable regulations in a conspicuous place at the jobsite. Assure that the regulations are not altered, defaced or covered by other materials.

1.06 EMPLOYEE TRAINING REQUIREMENTS

A. All personnel that may be exposed to impacted materials shall comply with training requirements in accordance with 29 CFR 1910.120.

1.07 DISPOSAL ACTIVITIES

A. The Contractor shall be responsible for the disposal of all waste materials generated during construction.

B. The Contractor shall handle, transport and dispose of all waste materials in accordance with all current federal, state and local regulations, and the Contract Documents.

C. The Contractor shall provide a certified letter at the conclusion of the work stating that all impacted materials removed from the project site were disposed of in accordance with all current federal, state and local regulations, and the Contract Documents. Attachments to the letter shall include manifests, bills of lading, and weigh tickets.

PART 2 PRODUCTS (NOT USED)

PART 3 EXECUTION

3.01 WASTE CLASSIFICATIONS

A. All waste materials, including impacted material will be classified into one of the four following categories in accordance with the Environmental Response Plan:

1. Exempt (C&D) Debris
2. C&D Debris
3. Non-Hazardous Industrial Solid Waste
4. Hazardous Waste

3.02 WASTE IDENTIFICATION PROCEDURES

A. NOTIFICATION

1. In accordance with the requirements of the Environmental Response Plan, the initial responsibility for identifying wastes will be with the Contractor performing the construction activities. The Contractor shall cease work in the area immediately and notify the Engineer when material is encountered which the Contractor believes does not meet the definition of C&D debris, or which the Contractor believes could potentially be considered an impacted material. The Contractor's personnel shall be familiar with the identification of such materials and shall not handle them until the material has been classified into one of the categories identified in 3.01.A.

B. INITIAL RESPONSE

1. Upon notification, the Engineer will assign an event number for the incident and will inspect the suspect materials. Based on this inspection and a review of other available information, a determination will be made as to whether the material can be considered C&D debris, non-hazardous industrial solid waste or potential Hazardous Waste.

2. The Engineer's inspection will include visual methods, screening with a photo ionization detector (PID), and other methods as described in the Environmental Response Plan. The Contractor may conduct a concurrent inspection, as desired, to verify the Engineer's inspection; however, no additional payment will be made for such work.

3. If upon notification by the Engineer that the suspect material can not be classified as C&D, the Contractor shall implement the monitoring requirements as detailed in the Contractor's Community Air Monitoring Plan.

C. WASTE CHARACTERIZATION

1. If the Engineer determines that the suspect materials may be a non-hazardous industrial solid waste or potential hazardous waste, further laboratory analysis and characterization shall be completed. The choice of analyses to be performed will be based upon available information regarding the probable nature of the material and its physical characteristics.

2. The Contractor shall perform waste sampling and characterization in accordance with the requirements of this Section, the Environmental Response Plan and the requirements of the approved disposal facility.

3. Appropriate sampling and analytical testing requirements will be determined by the Engineer within 24-hours of the initial site inspection.

4. The Contractor shall provide all waste sampling and analytical services as required by the Engineer and as specified in the Environmental Response Plan.

3.03 WASTE HANDLING, STAGING, AND DISPOSAL

A. HANDLING AND STAGING

1. At the direction of the Owners representative, potentially impacted material shall be excavated and moved to an on-site staging area, and shall remain on-site until characterized in accordance with all current federal, state and local regulations, and the Contract Documents.

2. In the event that impacted materials are encountered during construction activities, the Contractor shall construct an on-site material staging area(s) to properly contain impacted materials until receipt of waste characterization and transportation for off-site disposal. The impacted material staging area(s) shall be of suitable size to contain the anticipated quantities of impacted materials generated during construction activities. The impacted material staging area(s) shall be placed within the construction limits of the Project, at designated areas as established by the Contractor prior to construction and reviewed and approved by the Engineer. The impacted material staging area(s) shall be constructed to meet the following minimum requirements:

   a. The impacted materials shall be placed onto an impermeable liner (e.g., 40-mil HDPE) that is of sufficient strength and thickness to prevent puncture during use. The placement of impacted materials into the staging area shall be performed such that it does not involve any equipment or procedures that may jeopardize the integrity of the underlying impermeable liner.

   b. An 18-inch high gravel berm shall be constructed around the perimeter of the staging area to provide for containment of liquids that have drained from the impacted materials, and to divert runoff around the staging area. The impermeable liner shall be placed within and extend up and over the berm and shall be anchored beyond the outside perimeter of the berm to prevent displacement.

   c. The staging area shall be sloped (where practical) and equipped with a sump (if possible based upon site conditions) to

collect liquids that have drained from the impacted materials or resulting from a precipitation event. The Contractor shall pump all liquids that accumulate within the staging area to a temporary storage tank(s). Following collection, liquids shall be containerized and transported to an appropriate water treatment facility.

d. The staging area shall be continuously covered with 10-mil polyethylene sheeting, except while materials are being actively placed within or removed from the staging area. The polyethylene sheeting shall be maintained watertight for the duration of the material staging activities and shall be securely anchored to prevent displacement.

e. The Contractor shall inspect the staging area(s) daily and shall promptly correct any deficiencies.

3. Moving impacted material off of the project site(except for disposal at an approved facility), or relocating impacted material to another location within the project site, is strictly prohibited unless authorized by the Engineer in accordance with the Environmental Response Plan and the Contractor's procedures as submitted under Section 1.03.

4. Material stockpiles shall not exceed 8-feet in height unless authorized by the Engineer.

5. Material stockpiles shall be protected with erosion and sediment control features, including silt fencing, in accordance with Section 01500 Temporary Facilities and Controls. Such features shall be removed and disposed of appropriately at the end of construction.

B. DISPOSAL

1. The majority of the spoil material generated on-site during construction is anticipated to be C&D debris. Waste spoils generated on site which do not meet the definition of construction/demolition debris will be classified as industrial waste. Disposal of such materials shall be in accordance with 6 NYCRR Part 360, and the requirements of the Environmental Response Plan.

2. Impacted material generated on-site during construction which is determined to be non-hazardous industrial solid waste or hazardous waste shall be disposed of at an appropriate facility, as approved by the Engineer. Disposal of such materials shall be coordinated with the Engineer and shall be in accordance with all applicable laws and regulations, and the Contract Documents.

3.04 EXCAVATION DEWATERING

A. The Contractor shall remove water that accumulates within active excavation areas to assist in dewatering soil and to facilitate implementation of the soil excavation activities. All water collected as a result of dewatering activities shall be handled in accordance with Section 02140 of the Contract Documents.

3.05 DECONTAMINATION OF EQUIPMENT

A. In the event that impacted materials are encountered during excavation activities, the Contractor shall perform decontamination of equipment in accordance with the following:

1. The Contractor shall provide a personal decontamination area as specified in the Contractor's HASP. The personal decontamination area shall include those facilities necessary to decontaminate personnel upon exit of the exclusion zone.

2. The Contractor shall establish procedures for the decontamination of all vehicles and equipment which may have come into contact with impacted materials. These procedures shall be reviewed by the Engineer prior to initiation of construction activities. The Contractor shall visually inspect all vehicles and equipment after decontamination. No vehicles shall leave the contamination reduction zone until they have been successfully decontaminated and inspected by the Contractor.

3. The equipment decontamination area shall be placed within the contamination reduction zone as identified in the Contractor's HASP and shall consist of an impermeable barrier (e.g., 40-mil HDPE) which is bermed and sloped to a collection sump. Precautions shall be taken to limit contact between the equipment, decontamination personnel, and any cleaning liquids that may accumulate in the

decontamination area. The Contractor shall be responsible for constructing and maintaining the decontamination area to accommodate all loads, equipment, and migration scenarios.

4. The Contractor shall dismantle and properly dispose of all materials associated with the equipment decontamination area and shall restore the area to its original conditions at the end of construction.

5. The extent and method of decontamination shall be at the discretion of the Contractor; however, equipment and materials shall be inspected by the Engineer prior to its departure from the Site. The Engineer reserves the right to require additional decontamination if deemed necessary.

6. Wash water generated as a result of equipment decontamination activities shall be collected, containerized, and transported to an appropriate water treatment facility or, if allowable, discharged to the POTW.

7. Solids and other materials generated during equipment decontamination shall not contact native soils and existing facilities, and shall be collected, characterized, and disposed of by the Contractor in accordance with the waste disposal requirements as detailed in this Section.

8. Personnel engaged in equipment decontamination activities shall use personal protective equipment (PPE) in accordance with the Contractor's HASP.

3.06 REPORTING AND RECORD KEEPING

A. Reporting and record keeping of the work performed under this Section shall be in accordance with the requirements of the Contract Documents.

B. Waste Manifest System

1. The Contractor shall establish a manifest system that accounts for all wastes identified in this Section. The Contractor shall describe the manifest system in writing for review and acceptance by the Engineer. The proposed system shall demonstrate custody over all wastes from the time the waste is removed from the work area until it is deposited at the approved disposal site. A disposal report is required in accordance with the Environmental

Response Plan.

2. The Contractor shall provide manifests and documents to the Engineer within three (3) working days of the removal of wastes from the site.

PART 4 MISCELLANEOUS REQUIREMENTS

4.01 AIR SAMPLING

A. The Owner will not conduct any air sampling at the site. The Contractor shall conduct air monitoring in accordance with the HASP and the Community Air Monitoring Plan.

B. The Contractor shall hire an independent contractor to develop and implement a Community Air Monitoring Plan in accordance with the Generic Community Air Monitoring Plan requirements as prepared by the New York State Department of Health. The independent contractor will be required to implement the Community Air Monitoring Plan, at a minimum, when site excavation work begins, dust-generation operations change. The independent contractor will also be required to implement the Community Air Monitoring Plan if through visual inspection or air monitoring (performed as part of the Contractor's HASP requirements) indicates the presence of constituents of concern during construction activities.

C. The Contractor shall submit and obtain approval of the Community Air Monitoring Plan from the New York State Department of Health.

4.02 PERSONNEL

A. All personnel that may be exposed to impacted materials or who are supervising such personnel shall comply with training in accordance with 29 CFR 1910.120 and shall be familiar with the provisions of the Contractor's HASP. PPE shall be worn at all times in accordance with the Contractor's HASP.

END OF SECTION

ATTACHMENT A

LAKE IMPROVEMENT PROJECT CONSTRUCTION ENVIRONMENTAL RESPONSE PLAN

The following plan has been prepared for the Onondaga County Lake Improvement Project Office. It outlines procedures to be followed when identifying, classifying or handling waste that is generated by site preparation, excavation, and other construction activities associated with the Lake Improvement Project. Included in the plan are the reporting and record keeping procedures to be utilized. All Contractors and their Subcontractors need to be informed of this Plan. Coordination of activities between Contractors, Onondaga County, and the Owner's On-site representative is essential.

Thank you in advance for your attention and cooperation in this matter.

SECTION 1 – WASTE IDENTIFICATION

1.01 WASTE CLASSIFICATION

Construction activities to be completed during Lake Improvement Project efforts construction will generate spoils material which will require proper handling procedures for reuse or disposal. Spoils material can be classified into several categories based on definitions included within 6NYCRR Part 360 and 6NYCRR Part 371. These categories include:

1. Exempt Construction/Demolition Debris (C/D)
2. Construction/Demolition Debris
3. Non-hazardous Industrial Solid Waste
4. Hazardous Solid Waste

These categories are briefly described below based on New York State regulations and local New York State Department of Environmental Conservation (NYSDEC) guidance documents.

Exempt Construction/Demolition Debris (C/D)

This material includes recognizable, uncontaminated concrete and concrete products, asphalt pavement, brick, glass, soil and rock.

Construction/Demolition Debris

This material is defined as uncontaminated solid waste resulting from construction, remodeling, repair and demolition of structures and roads. Such waste includes but is not limited to bricks, concrete and other masonry materials, soil, rock, wood, wall coverings, plaster, drywall, plumbing fixtures, non-asbestos insulation, roofing shingles, asphaltic pavement, glass, plastic, electrical wiring and metals incidental to the above. Specifically excluded from this category are the following types of materials: asbestos waste, garbage, corrugated container board, electrical fixtures containing hazardous liquids such as fluorescent light ballasts or transformers, carpeting, furniture, appliances, tires, drums and containers and fuel tanks.

Industrial Solid Waste

Waste materials not included in the above definition or those specifically excluded such as tires, appliances, drums and fuel tanks would be considered industrial or commercial solid waste. These wastes may be further categorized as hazardous or non-hazardous waste.

Hazardous Solid Waste

Hazardous wastes are those included in 40 CFR Part 261, *Identification and Listing of Hazardous Waste* and the corresponding New York State regulations if they meet any of the following three conditions:

1. The waste exhibits any of the four characteristics of a hazardous waste: ignitability, corrosivity; reactivity; or toxicity or

2. The waste is specifically listed as being hazardous in one of the tables in the regulations and has not been excluded, or

3. The waste is a mixture of a listed hazardous waste (No. 2, above) and a non-hazardous waste.

Designation of a material as a listed hazardous waste or mixture containing a listed hazardous waste may require information regarding the origin and/or previous usage of the material with the possible exception of PCB containing wastes within New York State. Given the nature of the project sites and the limited information which may be available on the origin of the waste materials present, determination of a hazardous waste classification for excavated materials will be based primarily on the characteristics of the waste and/or PCB content.

1.02 WASTE IDENTIFICATION PROCEDURES

According to the information available, the areas where Lake Improvement Construction projects are planned include areas where non-native fill has been placed. As a result of these conditions this plan has been prepared to include procedures for the identification of wastes uncovered as a result of excavation activities on the proposed construction sites. A primary goal of these procedures will be to identify wastes which are hazardous in accordance with 40 CFR 261 and 6NYCRR 371 for which handling and disposal will be the responsibility of Onondaga County (the Owner).

1. *Notification*

   The initial responsibility for identifying wastes on site will be with the personnel performing construction activities. During routine excavation activities, spoil materials generated are normally expected to be classified as construction/demolition debris and presumed to be non-hazardous. The Contractor should be familiar with these types of materials and will handle them in accordance with their standard operating procedures when construction personnel encounter materials which do not meet the definition of C/D material or which the Contractor believes could potentially be considered hazardous waste, an evaluation must be performed. At this point the contractor should cease work in the area and notify the Owner's on-site representative as required by the Contract. The reporting form contained in Appendix A should be utilized by the Owners representative in documenting each event. The health and safety of the Contractor's personnel on-site shall be the responsibility of the Contractor and is not addressed as part of this plan.

2. *Initial Response*

Upon notification, the Owner's representative will assign an event number for the incident which should be entered at the upper right corner of the form. Copies of the report form should also be sent by telefax to the Project Manager. Following notification, an experienced representative of the Owner will visit the site to observe the waste materials. Based on a visual inspection and a review of other available information, a determination will be made as to whether the material can be considered C/D debris or industrial soiled waste. The inspection will include the following:

- The material will be inspected visually to determine if its physical characteristics are consistent with the definition of construction/demolition debris under 6 NYCRR Part 360.

- The material will also be inspected to determine if there is apparent evidence of contamination. This will include the presence of visual contamination including staining, oily substances or the presence of apparent contaminants of unknown composition or origin or the presence of unusual odors.

- If possible, the materials will then be field screened for the presence of volatile organic vapors utilizing a photoionization detector (PID) with a 10.6 ev lamp, or higher, utilizing the following procedure. A small quantity of sample will be placed within a polyethylene bag or a small jar with an aluminum foil cover and lid. The sample will be allowed to equilibrate for a period of ten minutes. Following the holding time, the probe of the PID will be inserted through the polyethylene or foil into the headspace of the container and the peak reading will be noted. Readings on the PID greater than 5 PPM over background will typically be considered indecative of volatile organic contamination.

- Based on the information available, an opinion will be formulated by the Owner and their Project Manager regarding the classification of the material in question. This response will typically cover two cases.

  A. The material physically resembles construction/demolition debris, does not appear to be contaminated based on preliminary screening and could be considered a C/D debris waste.

  B. The material appears to be contaminated and/or may potentially be a hazardous or non-hazardous industrial waste.

- Should Case A occur, further investigation and response will cease and the Contractor will be notified promptly. Should Case B occur, further waste characterization will take place.

- In addition to the internal notification requirements discussed previously, Federal and State regulations may also require notification and reporting to various regulatory agencies. These requirements are outlined in Section 3.

3. Waste Characterization

Once the waste materials have been designated as a potential industrial waste, further characterization must be completed. For recognizable wastes (such as carpeting, tires, or corrugated containers) which do not appear to be contaminated, a determination may be made without laboratory analysis that the material fits the description of non-hazardous industrial/commercial solid waste. For potential wastes of unknown characteristics or origin, the area will be roped off and further construction in the immediate vicinity will be postponed until consultation with Onondaga County has taken place. Again, responsibility for the health and safety of the Contractor's personnel lies with the Contractor and is not addressed within this work plan.

In order to determine whether the waste material is a hazardous waste by toxicity characteristic or a PCB waste, the following analyses will be considered.

Analysis Designation	Characteristic	Analysis Method
A	Ignitability	SW-846 Method 1010
B	Corrosivity	SW-846 Method 1110
C	Reactivity	SW-846 Method 9010 Method 9030
D	Toxicity Characteristic Leaching Procedure	SW-846 Method 1311
E	PCB	USEPA SW-846 Method 8080

The choice of analyses to be performed will be based upon available information regarding the probable nature of the substance and its physical characteristics. Where appropriate, analytical testing requirements designated by a disposal site for waste profiles should also be included.

Given the somewhat involved procedures and relatively lengthy turnaround times for completion of the TCLP analyses, along with the variable requirements for disposal site waste profiles, it may be necessary to run certain total analyses prior to the hazardous waste analyses in order to promptly characterize the type of material encountered or to meet disposal site profiling requirements. These analyses will again be a function of the available information regarding the physical characteristics of the substance but may include the following:

Analysis Designation	Parameter	Analysis Method
F	Total Solids	USEPA Method 160.3
G	pH	SW-846 Method 9045
H	Volatile Organics	SW-846 Method 8240
I	Semi Volatile Organics	SW-846 Method 8270
J	Total Petroleum Hydrocarbons	NYSDOH 310-13
K	Petroleum Fingerprint Scan	NYSDOH 310-13
L	Total Lead	SW-846 Method 7421
M	Total Organic Halogens (TOX)	SW-846 Method 9020

Where the waste encountered is believed to result from a discharge of petroleum, analyses for volatile and semi-volatile organics as well as PCB and lead would be considered appropriate in accordance with guidance documents for the investigation of petroleum spills published by NYSDEC.

Appropriate sampling and analytical testing requirements will be determined by the Project Manager generally within 24 hours of the initial site inspection following consultation with the Owner's on-site representative. A list of appropriate samples and analyses will then be forwarded to the laboratory along with a schedule for completion of the sampling and analytical services. Field sampling and analytical services will be provided through the Contractor as required by the Project Manager.

Where the contamination appears to be contained and can be removed and managed in discrete quantities (e.g., a single drum of solids with no apparent leakage) construction can potentially resume after only a short-term interruption. In these cases, analysis for hazardous waste characteristics can proceed directly as the extended turnaround time will not significantly affect construction schedules.

Where wastes are uncontained and the potential exists for extended remedial efforts, priority should be placed on rapid characterization of the waste and completion of relatively short term analyses. This will expedite formulation of a remedial response plan and quicker containment or removal of the waste by a remedial contractor thereby minimizing delays in construction schedules. Potential hazardous waste and non-hazardous industrial waste shall be placed in designated site containment areas.

SECTION 2 – WASTE STAGING

2.01 IMMEDIATE RESPONSE ACTIONS

Should an immediate clean-up or removal response be required to reduce the likelihood of further waste migration or to allow completion of a crucial construction task, a response plan will be formulated based on conversations between the Owner, the Project Manager, the Owner's on-site representative, and the Contractor. In accordance with 6NYCRR Section 613.8, the New York State (NYS) Spill Hotline (1-800-457-7362) must be contacted within two hours of the discovery of a petroleum spill. Some of the available options for response actions include:

1. Application of sorbents for liquid wastes.

2. Pumping and containerizing of liquid or semi-solid wastes.

3. Excavation and containerizing of solid wastes.

Wastes which have been contained shall remain on-site in a designated staging area until properly characterized for disposal by USEPA approved methods. Storage of wastes on or at the specific construction sites should be in accordance with accepted practice for temporary spill prevention and control. This will include, at a minimum, storage in a bermed and lined area. All stored wastes should also be covered with poly sheeting to reduce infiltration of precipitation. The storage area should be inspected daily for signs of leakage or runoff from the bermed area. The Waste Storage Area Inspector Form in Appendix B shall be completed on a weekly basis.

Based on the effectiveness of the short-term removal and containment procedure and the results of analytical testing, a decision will be made by the Owner, the Project Manager, and the Owner's on-site representative regarding continuation of the immediate response operations in the vicinity of the waste.

2.02 FOLLOW-UP RESPONSE ACTIONS

Following completion of the initial containment or removal efforts, an assessment will be made regarding the effectiveness of the response. Where the initial response involves containment only, a schedule will be prepared within 24 hours of completion of the immediate response to address further response plans including waste removal. Where the initial or follow-up response involves removal of the waste, follow-up site inspection will be utilized to evaluate the effectiveness of the removal action. This work will involve inspection of the area by the Project Manager and the Owner's on-site representative for visual evidence of residual contamination or unusual odors. This will be followed by field screening of the area and the soils within the excavation for volatile organic vapors with a PID equipped with a 10.0 ev lamp. PID headspace analysis of soils from within the excavation will be completed and recorded. Based on a review of the analytical results and comparison with applicable regulatory thresholds or derived clean-up criteria, a determination will be made by the Owner, the Project Manager, and the Owner's on-site representative as to the completeness of the removal action or the need for further response. This will also be discussed with representatives of NYSDEC.

In cases where the waste involves a reportable discharge of petroleum, documentation of the immediate response action and notification of the NYSDEC Region 7 Spill Response Section will be required in accordance with the procedures in Section 3.

The goal of these response efforts will be the removal of the primary waste material and associated contaminated soil and groundwater within the defined limits of work as shown on the contract drawings. Remediation of potential secondary impacts of the waste including restoration of site groundwater quality, analysis of migration pathways or remediation of off-site areas is beyond the scope of this plan.

2.03 WASTE STORAGE AND DISPOSAL

Waste Storage

As discussed in Section 2.01 industrial wastes which have been removed from the point of construction shall remain on or at the sites of origin, where practicable, until properly characterized. Wastes removed by the Contractor will be contained so as to minimize spillage.

A designated area will be established for each site (preferably at the construction site) for the storage of potential industrial solid wastes. The area should be situated such that runoff from the space will not be directed toward surface waters or immediately adjacent properties. The area should be bermed and lined to reduce the potential for infiltration of waste compounds to groundwater.

The storage areas should be covered with polyethylene or other waterproof material capable of directing incident precipitation off the waste pile. The storage area should be secured and inspected daily for signs of leakage or runoff from within the bermed area. Photos should be taken documenting storage area conditions. A storage area checklist is included in Appendix B.

Regulations contained in 6NYCRR Part 360 1.7(b) state that solid waste transfer and storage facilities located at an industrial site used exclusively for the management of solid waste generated at that location are exempt from the regulations. In this case, the storage of solid waste at the facility would not require a Part 360 permit provided the wastes were generated on site.

Should the waste be determined to be hazardous as defined previously, the storage of these materials would be subject to the applicable provisions of 6NYCRR Part 370-373 and 40 CFR 260-265.

Should greater than 100 kilograms of hazardous waste be generated or stored at the site in any month, the generator must apply for a USEPA hazardous waste generator's I.D. number. However, the accumulation of hazardous waste on-site prior to disposal may take place for up to 90 days without a NYSDEC permit, provided that the waste is held in containers and the generator complies with the applicable provisions of 6 NYCRR 373-1.1(d).

Waste Disposal

The majority of the spoil material generated on-site is expected to be urban fill and/or construction/demolition (C/D) debris. In accordance with the requirements of 6 NYCRR Part 360, disposal of C/D materials within New York State must be at a facility authorized to accept C/D wastes pursuant to Part 360 regulations or to a NYSDEC or court issued order. In the case of C/D debris, certain materials may be disposed of at facilities which are exempt from the Part 360 regulations. These materials commonly known as "exempt C/D" include only clearly recognizable uncontaminated concrete, asphalt pavement, brick, soil or stone. These may be placed on exempt fill sites provided that operations are undertaken only between the hours of sunrise and sunset and no fee or other form of consideration is required for the privilege of using the site for disposal purposes.

The determination of what constitutes "uncontaminated" material as applied to C/D waste is undefined within the Part 360 regulations. Guidance issued by NYSDEC in the document entitled "Division of Solid Waste, Technical and Administrative Guidance Memorandum: Construction and Demolition Debris" (SW-89-2002) states the following:

> "Although the authority exists to require it under appropriate circumstances, Part 360 does not contemplate requiring, in the typical case, analytical sampling on each and every load of C&D debris destined for disposal in order to make a "contaminated vs. non-contaminated" determination. Contaminant-level thresholds exist in regulation for the determination of whether a waste is hazardous, but currently there are no corresponding analytical standards to determine if a waste is clean enough to be considered C&D debris. Therefore, if a waste material qualifies for C&D debris status due to its known origin and composition, it will be presumed "uncontaminated," absent records, existing data, or knowledge or observation of the inspector to the contrary. Sampling may still be necessary at the discretion of the inspector and in cases where hazardous waste is suspected to be present."

As discussed in Section 1.01 of this plan, waste generated on site which does not meet the definition of construction/demolition debris will be classified as industrial waste. Disposal of non-hazardous industrial waste within New York State must be at a facility authorized by the State for acceptance of industrial waste pursuant to Part 360 or which accepts this waste pursuant to a NYSDEC or Court issued order.

For wastes that are determined to be hazardous, a variety of options exist for disposal as well as a number of specific restrictions depending on the waste characteristics. Disposal of hazardous waste spoil materials generated from pre-existing conditions encountered during construction of this facility will be handled on a case-by-case basis and must be approved by the Owner, with assistance from the Project Manager and the Owner's on-site representative.

SECTION 3 – REPORTING AND RECORDKEEPING

3.01 REPORTING AND NOTIFICATION REQUIREMENTS

Variations in the type of waste materials discovered and the nature of the spill or discharge which may have caused the release of waste can affect the specific applicable legal requirements for notification of regulatory agencies. Some general requirements for reporting of spills are outlined below.

Notification is required under several laws and regulations. Under Article 12 of New York State's Navigation Law, "Any person responsible for causing a discharge (of petroleum) shall immediately notify the department . . . but in no case later than two hours after the discharge."

Handling and Storage of Petroleum regulations (6 NYCRR Section 613.8) state that , "Any person with knowledge of a spill, leak or discharge of petroleum must report the incident to the department within (2) two hours of discovery."

Chemical Bulk Storage regulations (6 NYCRR Section 595.2) require, "any person who is the owner of, or in actual or constructive possession or control of . . . or any agent or employee thereof, or any person in a contractual relationship therewith . . . who has knowledge of a release within two hours."

The Environmental Conservation Law (Article 17, Section 1743) requires, "Any person who is the owner of or in actual possession or control of more than one thousand one hundred gallons, in bulk, of any liquid, including petroleum, which if released, discharged or spilled would or would be likely to pollute the lands or waters of the state including the groundwaters thereof shall, as soon as he has knowledge of the release . . . immediately notify the department."

"Notify the department" refers to notifying the Department of Environmental Conservation through its Spill Hotline: 1-800-424-7362. In some instances, spills must also be reported to the National Response Center: 1-800-424-8802.

Due to the nature of the work being conducted, discovery of wastes generally involves uncovering evidence of a pre-existing condition where the nature of the substance and the actual quantity are unknown. This further complicates the decision as to whether or not an incident is reportable. It is recommended that discovery of these wastes be reported promptly to the Project Manager and the Owner's on-site representative for advice and an opinion regarding reporting requirements and that the discovery of any reportable discharge of petroleum wastes encountered during construction be reported to the NYSDEC Region 7 Spill Engineer or the NYSDEC Central Office Hotline in the absence of regional staff.

If manufactured gas plant (MGP) byproducts are encountered, Brian D'Amour (NYSDEC, Division of Environmental Remediation, 518-457-4343) must be notified.

Following consultation between the Owner, the Project Manager, the Owner's on-site representative, and legal counsel, reporting requirements will be determined and an appropriate response completed. Copies of all records, notifications and related documents shall be forwarded promptly to the Project Manager's attention.

TABLE 1

WASTE RESPONSE
CONTACT PERSONS

In the event of discovery of industrial waste which the Contractor believes may potentially be a hazardous waste, the Contractor shall notify the Owner's on-site representative. For this project, this shall be _____.

A. The on-site representative shall contact the following persons:

_____

_____

APPENDIX A

WASTE NOTIFICATION FORM

LAKE IMPROVEMENT PROJECT OFFICE
WASTE NOTIFICATION FORM

1. Date:_____ Event No._____

2. Time of Discovery:_____

3. Name of Person Who Discovered Waste:_____

4. Method of Discovery:_____

5. Name of Person Reporting:_____

6. Description of Waste:

   a. Physical Characteristics _____liquid _____solid _____semi-solid (sludge)

   Brief Description:_____

   _____

   b. Estimated Quantity of Waste (based on visual observation):_____

   c. Color:_____

   d. Odor (describe if noticeable odor was present):_____

   _____

7. Location of Waste:_____

   _____

8. Response Action Taken Prior to Notification:_____

   _____

   _____

9. Persons Notified:_____

   _____

   _____

APPENDIX B

WASTE STORAGE AREA INSPECTION FORM

LAKE IMPROVEMENT PROJECT OFFICE
WASTE STORAGE AREA INSPECTION FORM

Inspector Name:_____ Weather Conditions:_____

Date of Inspection:_____ Temperature:_____

Time of Inspection:_____

	Yes	No
1. Is area secured and are signs posted?	____	____
2. Are all wastes within containment area covered with polyethylene?	____	____
3. Is there any visual evidence of surface staining or discoloration originating from the containment area?	____	____
4. Are exposed liner and cover surfaces in good condition?	____	____
5. Is there any visual evidence of vandalism, tampering or any other deteriorating condition?	____	____
6. Does visual inspection indicate repair work is required? (Explain.)	____	____
7. Were photographs taken? If yes, by whom?	____	____
8. Indicate photo log numbers.	____	____

Remarks/Comments:

_____

_____

_____

_____

_____

SECTION 02229

WATERWAY PROTECTION

PART 1 STANDARD OF PERFORMANCE FOR ALL STREAM BED AND/OR BANK DISTURBANCE WORK

New York State Environmental Conservation Law requires that a Contractor shall comply with State requirements for all construction work, either temporary or permanent, that disturbs stream beds and/or banks. Construction work shall include work required for stream crossings, sewer trenching parallel or adjacent to streams, modification of water courses occasioned by construction of sewers, interceptors, pumping stations, force mains, treatment plants and outfalls, including temporary crossings for passage of equipment used in the course of the work.

All work shall meet the following standards of performance:

A. The project shall not obstruct the upstream or downstream movement of the aquatic life. (Culverts and the floors of box culverts and bridges shall be, as nearly as possible, flush with the stream bed.).

B. Sufficient flow of water shall be maintained at all times to sustain aquatic life downstream.

C. Any culvert, box culvert or bridge floor shall be designed to provide a V or dish-shaped channel, to concentrate flow during periods of low water and facilitate the movement of aquatic life.

D. Disturbance of the stream bed shall be kept at an absolute minimum, and the stream bed shall be returned as nearly as possible to its original condition or better. (Where possible, in modifying a stream bed the centerline shall be 8 to 12 inches lower than the toe of the channel bank, to concentrate the flow of water.)

E. Where work necessitates disturbing banks, they shall be returned to original condition or they shall be graded to a one vertical to two horizontal slope with appropriate sized rip rap installed or planted with suitable grasses, trees and shrubs so as to prevent erosion. All tree and brush removal shall be kept to a minimum.

F. Any dike or cofferdam required to facilitate construction shall be erected in such a manner that stream flow will not be sufficiently reduced to endanger fish life downstream and such dike or cofferdam shall be erected of materials that will not contribute substantially to the turbidity or siltation of the stream.

G. During the project, care shall be taken to prevent or reduce to a minimum any damage to any stream from pollution by debris, sediment or other material, or from the manipulation of equipment and/or materials in or near such streams. Water that has been used for washing or processing, or that contains oils or sediments that will reduce the quality of the water in the stream, shall not be directly returned to the stream. Such water will be diverted through a settling basin or filter before being directed into the streams.

H. If water is taken from a stream for construction purposes and an impounding structure is necessary, such structure shall be erected in a manner causing the least possible disturbance to the stream.

I. In all cases involving work in a stream every effort should be made to return the stream to the highest possible standard for aesthetic value, water quality, and habitat of aquatic life.

END OF SECTION

SECTION 02230

SELECTED FILL

PART 1 GENERAL

1.01 DESCRIPTION

A. Select fill materials shall be as specified herein and used as specified in Section 02300 Earthwork, or elsewhere within the Contract Documents.

B. Backfill and fill materials shall be free of all organic material, trash, snow, ice, frozen soil, or other objectionable materials which may be compressible or which cannot be properly compacted. Soft, wet, plastic soils which may be expansive, clay soils having a natural, in place water content in excess of 30 percent, soils containing more than 5 percent (by weight) fibrous organic materials, and soils having a plasticity index greater than 30 shall be considered unsuitable for use as backfill and fill. Backfill and fill materials shall have a maximum of 1 percent expansion when testing is performed on a sample remolded to 95 percent of maximum dry density (per ASTM D698) at 2 percent below optimum moisture content under a 100 lbs/sq ft surcharge.

PART 2 PRODUCTS

2.01 SUBMITTALS

A. The name and location of the source of the material.

B. Samples and test reports of the material, as required.

2.02 LISTING OF GRANULAR MATERIALS

All specified materials shall be free of chemical contamination.

A. Type "A", Crushed Gravel

Thoroughly washed crushed, durable, sharp-angled fragments of gravel free from coatings. Crushed particles shall be a minimum of 85 percent by weight of the particles with at least two fractured faces. The total area of each fractional face shall exceed 25 percent of the maximum cross-sectional area of the particle.

Crushed gravel shall have the following gradation by weight:

Percent Passing	Sieve
100%	1-1/2 inch
0-25%	3/4 inch
0-5%	1/2 inch

B. Type "B", Crushed Stone

Thoroughly washed clean, sound, tough, hard crushed limestone or approved equal free from coatings. Gradation for Type "B" shall be the same as specified for Type "A" material.

C. Type "C", Crushed Stone

Thoroughly washed, clean, sound, tough, hard, crushed limestone or approved equal free from coatings. It shall have a gradation by weight of 100 percent passing a one (1) inch square opening and 0 - 15 percent passing a one-quarter (1/4) inch square opening.

D. Type "D", Washed Sand

Washed coarse sand having the following gradation by weight:

Percent Passing	Sieve
100%	3/8 inch
95 - 100	No. 4
80 - 100	No. 8
50 - 85	No. 16
25 - 60	No. 30
10 - 30	No. 50
2 - 10	No. 100

E. Type "E", Screened Gravel

Screened gravel or other acceptable granular material free from organic matter with a gradation by weight of 100 percent passing a one and a half (1-1/2) inch square opening, 30 to 65 percent passing a one-quarter (1/4) inch square opening and not more than 10 percent passing a No. 200 mesh sieve as determined by washing through the sieve in accordance with ASTM D422.

F. Type "F", Crushed Stone (NYSDOT Type 1)

Crushed stone as described in the current NYSDOT Standard Specifications, Section 703 - Aggregates, satisfying Size Designation 1 and physical requirements stated therein and summarized below:

Percent Passing	Square Opening (inches)
100%	1
90 - 100	1/2
0 - 15	1/4
0 - 1	#200 Sieve

G. Type "R", Run-of-Bank Gravel

Run-of-Bank gravel shall be clean, well graded material free from organic matter, with a grain size as follows, as determined by washing through the sieve in accordance with ASTM D422.

Sieve Size	% Finer by Weight
3 inches	100
½ inch	40 - 85
No. 4	25 - 75
No. 40	0 - 35
No. 200	0 - 10

H. Common Fill and Ordinary Borrow

Common Fill and Ordinary Borrow shall consist of well graded, natural, inorganic soil free from contamination, organic materials, loam, wood, ice, cinders, asphalt, concrete, trash and other weak, compressible, or objectionable materials. Common Fill shall have a minimum dry density of 120 pounds per cubic foot. It shall not contain granite blocks, broken concrete, masonry rubble or other similar materials. Common Fill and Ordinary Borrow shall be used for general site fill. Common Fill and Ordinary Borrow shall not contain stones larger than six inches in maximum dimensions and shall have a maximum of 80 percent passing the No. 40 sieve and a maximum of 30 percent passing the No. 200 sieve.

I. NYSDOT 304.12 Subbase

Crushed stone as described in the current NYSDOT Standard Specifications, Section 304 - Subbase Course, satisfying the gradation and material designation stated therein.

J. Type "3" Crushed Stone

Crushed stone as described in the current NYSDOT Standard Specifications, Section 703 - Aggregates, satisfying Size Designation 3 and physical requirements stated therein.

2.03 CONTROLLED LOW STRENGTH MATERIAL

A. Provide controlled low strength material (CLSM) containing cement and water as per NYSDOT Specification Section 204. At the Contractor's option, it may contain fly ash, aggregate, or chemical admixtures in any proportions such that the final product will meet the strength and flow consistency requirements included in this specification.

B. Materials shall meet the following requirements:

1. Portland Cement, Type 1 or Type 2 shall be as described in NYSDOT Standard Specifications 701-01.

2. Water shall be as described in NYSDOT Standard Specifications 712-01.

3. Aggregate

a. The gradation of the aggregate shall have 100% passing the 19.0 mm (¾-inch) sieve and a maximum of 20% passing the 75 µm (0.003-inch) sieve.

b. Recycled aggregate for use in this item shall be evaluated for quality and gradation by the NYS Geotechnical Engineering Bureau. Provide the Engineer with a copy of documentation issued by the NYSDEC attesting to its conformance with applicable NYSDEC rules and regulations.

4. Fly Ash

a. Fly ash shall be tested pursuant to a testing protocol approved by the NYSDEC. Provide the Engineer with a copy of documentation issued by NYSDEC attesting to its conformance with applicable NYSDEC rules and regulations.

b. Fly ash use shall conform to the chemical and physical requirements for mineral admixture, Class F listed in ASTM C618 including Table 2 (except for Footnote A). The loss on ignition requirement shall be waived.

5. Chemical Admixtures

a. Chemical admixtures shall be as described in NYSDOT Standard Specifications 711-08, including high air generators manufactured for CLSM.

b. The Contractor shall certify that the CLSM has a 28-day compressive strength between 275 kPa and 2050 kPa (40 psi and 297 psi). Test specimens of CLSM shall be cast in accordance with NYSDOT Materials Method 9.2. The number or frequency of test specimens shall be as determined by the NYSDOT. Specimens shall be delivered to the NYSDOT for evaluation. The test specimens shall be for informational purposes and shall not be used for project acceptance.

PART 3 EXECUTION

3.01 GENERAL

A. Select Fill Materials shall be furnished and installed as specified in Section 02300 Earthwork, and as specified or shown elsewhere in the Contract Documents and/or Drawings.

3.02 CONTROLLED LOW STRENGTH MATERIAL

A. Materials shall be mixed at a stationary mixing plant. The mixer shall be either a continuous or a batch type plant, designed to accurately proportion either by volume or by weight, so that when the materials are incorporated in the mix, a thorough and uniform mix will result. The mixer shall be capable of providing accurate control, at all times, of the amount of material entering the mixer per time interval. The mixer shall be equipped to mechanically interlock the material feeds, such that the uniformity of the mixture is assured.

B. The mix may be transported in open haul units when the material is placed within 30 minutes of the end of mixing. Material placed in excess of 30 minutes after the end of mixing shall be transported in a rotating drum unit capable of 2-6 rpm.

C. The Contractor shall determine the flow consistency of the CLSM material prior to placement by filling a plastic or metal cylinder 150 mm (6-inches) in length and 75 mm (3-inches) in diameter with the CLSM and strike off the surface. Raise the flow cylinder 150 mm (6-inches) in a continuous motion without rotation. Immediately measure the spread of the CLSM along two diameters which are perpendicular to each other. CLSM shall have a minimum diameter of 200 mm (8-inches).

D. The method of placing CLSM shall be as approved by the Engineer.

E. The CLSM shall be accepted on the basis of inspection by the Engineer.

END OF SECTION

SECTION 02270

GEOTEXTILE FABRIC

PART 1 GENERAL

1.01 DESCRIPTION

A. Work Specified

1. Furnishing and installing geotextile filter and stabilization fabrics as shown on the Contract Drawings.

B. Related Work Specified Elsewhere

1. Section 02300 Earthwork
2. Section 02230 Selected Fill
3. Section 02501 Underground Pressure Piping Installation
4. Section 02530 Sewage and Drainage Piping Installation
5. Section 02721 Paving and Surfacing

1.02 SUBMITTALS

A. Submittals shall be submitted in accordance with the provisions set forth in the Special Project Conditions, General Provisions, and General Specifications.

B. Manufacturer's Information/Product Data for each type of geotextile fabric submitted.

C. Manufacturer's certification that the materials submitted fully comply with the requirements of the specified standards.

D. Samples

1. 8-inch square or larger piece of each type of geotextile fabric submitted.

PART 2 PRODUCTS

2.01 MATERIALS

A. Geotextile Filter Fabric

1. Geotextile filter fabric shall be a nonwoven fabric composed of polypropylene filaments formed into a stable network such that the filaments retain their relative position. The fabric shall be inert to biological degradation and naturally encountered chemicals, acids and alkalies.

2. Geotextile filter fabric shall conform to the following minimum property values:

Fabric Property	Unit	Test Method	Minimum Value
Grab Tensile Strength	lb	ASTM D-4632-86	120
Grab Tensile Elongation	%	ASTM D-4632-86	50
Trapezoid Tear Strength	lb	ASTM D-4533-85	50
Burst Strength	psi	ASTM D-3786-80a[1]	240
Puncture Resistance	lb	ASTM D-4833	70
Apparent Opening Size	US Standard Sieve	ASTM D-4751	70
Permeability, k	cm/sec	ASTM D-4491-85[2]	0.22
Ultraviolet Resistance	%	ASTM D-4355-84	70
Water Flow Rate	gpm/sf	ASTM D-4491-85[2]	120

Notes:

1. Diaphragm Bursting Tester.

2. 5 cm Constant Head Test Method.

3. Geotextile fabric shall be Mirafi 140N, Mirafi Inc., Charlotte, North Carolina; Amoco 4545, Amoco Fabrics and Fibers Company, Atlanta, Georgia; or approved equal.

B. Geotextile Stabilization Fabric

1. Geotextile stabilization fabric shall be a woven fabric composed of polypropylene yarns formed into a stable network such that the yarns retain their relative position. The fabric shall be inert to biological degradation and naturally encountered chemicals, acids and alkalies.

2. Geotextile stabilization fabric shall conform to the following minimum property values:

Fabric Property	Unit	Test Method	Minimum Value
Grab Tensile Strength	lb	ASTM D-4632-86	300
Grab Tensile Elongation	%	ASTM D-4632-86	15
Trapezoid Tear Strength	lb	ASTM D-4533-85	115
Burst Strength	psi	ASTM D-3786-80a[1]	600
Puncture Resistance	lb	ASTM D-4833	120
Apparent Opening Size	US Standard Sieve	ASTM D-4751	40
Permeability, k	cm/sec	ASTM D-4491-85	0.02
Ultraviolet Resistance	%	ASTM D-4355-84	70
Water Flow Rate	gpm/sf	ASTM D-4491-85	2

Notes:

1. Diaphragm Bursting Tester.

2. Tension Testing Machine with ring clamp; steel ball replaced with a 5/16-inch diameter solid steel cylinder centered within the ring clamp

3. Geotextile stabilization fabric shall be Mirafi 600X, Mirafi Inc., Charlotte, North Carolina; Amoco 2016, Amoco Fabrics and Fibers Company, Atlanta, Georgia; or approved equal.

PART 3 INSTALLATION

3.01 GENERAL

A. Area of fabric placement shall be cleared of all sharp objects and stone greater than 3-inches in size.

B. All geotextile shall be installed and seamed in accordance with manufacturer's installation instructions.

3.02 GEOTEXTILE FABRIC

A. Geotextile fabric under access roads and pipe foundation in filled areas shall be installed as follows:

1. Fabric shall be laid onto prepared subgrade in the direction of construction traffic.

2. Fabric panels shall be overlapped a minimum of three (3) feet.

3. Access road or foundation materials, as shown on the Contract Drawings and specified in Section 02230 Selected Fill, shall be placed over the fabric and compacted as per Section 02300 Earthwork.

END OF SECTION

SECTION 02300

EARTHWORK

PART 1 GENERAL

1.01 SUMMARY

A. This Section includes all labor, materials, services and equipment necessary to complete the earthwork required for completion of the work.

B. Excavation, stockpiling, filling, and backfilling of test pits to locate existing utilities, or any other purpose for which excavation may be needed.

C. Backfill excavations to the specified percent compaction.

D. Excavation shall include all excavation within the limits specified herein for the removal of remnants of former structures, including, but not limited to, wood piles, granite blocks, timber structures, abandoned utilities, railroad tracks, and any other obstructions as ordered or approved by the Engineer.

E. Provide adequate dust control and maintain adjacent streets and sidewalks in a clean and unencumbered state.

F. Prepare, grade, shape, compact, and protect all subgrades, backfills, and ground surfaces as shown on the Contract Drawings.

G. Place plastic separators, vapor barriers, mudmats, and geotextiles as necessary.

H. Manage and legally dispose off-site all excess or unsuitable excavated materials, including but not limited to, soil, rock, water, demolition waste, and debris that cannot be reused on-site in accordance with the requirements of the Contract Documents.

I. All other work related to required excavation, stockpiling, furnishing earth materials, back filling, filling, compaction, subgrade preparation and protection, disposal, and other items incidental to earthwork.

1.02 RELATED SECTIONS

A. Section 02015 Geotechnical Instrumentation
B. Section 02140 Dewatering
C. Section 02170 Temporary Excavation Support
D. Section 02230 Selected Fill
E. Section 02270 Geotextile Fabric

1.03 REFERENCES

A. Material and installation shall be in accordance with the latest revisions of the following codes, standards, and specifications, except where more stringent requirements are specified herein:

1. American Society for Testing and Materials (ASTM)
2. New York State Department of Transportation (NYSDOT)
3. Occupational Safety and Health Administration (OSHA)
4. American National Standards Institute (ANSI)

1.04 DEFINITIONS

A. Earthwork is defined to include, but not be limited to, clearing, topsoil removal and storage, asphalt and concrete pavement removal, concrete roadbase removal, classified and unclassified excavation for structures and trenches, handling and disposal of surplus materials, maintenance of excavations, removal of water, backfilling operations, rough grading, embankments and fills, compaction, and protection of existing structures and facilities.

B. Excavated material shall be classified as provided herein.

1. Common Earth Material

a. Common earth material shall include all earth material except rock.

b. All unconsolidated and non-hardened material, rippable rock, loose rock, soft mineral matter, weathered rock, and soft or friable shale, which are removable with normal earth excavation equipment, shall be classified as common earth material.

c. All boulders and detached pieces of solid rock or concrete or masonry less than one cubic yard in volume shall be classified as common earth material.

2. Rock

a. Rock shall include all sound solid masses, layers and ledges of consolidated and hardened rock or mineral matter of such hardness, durability and/or texture that is not rippable or cannot be excavated with normal earth excavation equipment.

b. Should a conflict arise as to the classification of material as either common or rock, the following tests shall be used in the appropriate determination.

i. Where practicable, a late model, tractor mounted, hydraulic ripper equipped with one ripping point of standard manufacturer's design adequately sized for use with and propelled by a crawler-type tractor rated a minimum of 240 fly-wheel horsepower (SAE Rating), operating in low gear, shall be utilized. Should the suspect material not be effectively loosened or broken down by ripping in a single pass so as to produce boulders defined in 1.04(B)(1)(c) above with the aforementioned ripper, the material shall be classified as rock.

ii. Where use of the ripper is impracticable, classification as rock shall be determined when the material cannot be loosened or broken down by a hydraulic excavator with a ripping bucket capable of providing a minimum bucket breakout force of 48,000 pounds (SAE Rating) or an excavator equipped with a hydraulic breaker capable of 15,000 ft.-lb. of impact energy. Should the suspect material not be effectively loosened or broken down so as to produce boulders as defined in 1.04 (B)(1)(c) above, the material shall be classified as rock.

1.05 SUBMITTALS

A. Submittals shall be in accordance with the provisions set forth in the Special Project Conditions, General Provisions, and General Specifications.

B. Other Submittals

1. Contractor's proposed method(s) of compaction and equipment.

2. Results of sieve analysis and compaction (Proctor) testing for all backfill materials.

3. Qualifications of selected earthwork Contractor.

4. Methods for obstruction removal along the alignment of the temporary excavation support walls including procedures for excavation support, protection of site improvements and backfilling.

5. A narrative and drawings (plans and elevations at 1 inch = 40 ft scale) describing the schedule, construction sequence and procedures for excavation, brace installation and removal, subgrade preparation, foundation construction (including lateral limits of base mat pours and vertical and lateral limits of foundation wall pours), waterproofing of the base mat and foundation walls, cold weather subgrade protection, backfilling, depressurization, dewatering, soil handling, stockpiling and other related activities.

1.06 GROUND CONDITIONS

A. The work will be performed through subsurface conditions which have been investigated for the purpose of developing assumptions about ground conditions. Both a Geotechnical Data Report (GDR) and Geotechnical Baseline Report (GBR) have been prepared based on this information.

B. The primary objective of the GDR is to present the results of geotechnical investigations conducted for the project in a factual manner. These results include descriptions of field and laboratory investigations performed and procedures used, background physiography, regional geology information, and summaries of site subsurface conditions.

C. The primary objectives of the GBR are to present the interpretation of subsurface conditions; to discuss the basis of geotechnical design and construction; and to set baselines for geotechnical conditions expected to be encountered during construction.

PART 2 PRODUCTS

Not used.

PART 3 EXECUTION

3.01 SITE CLEARING AND GRADING

A. Sites of all construction work shall be cleared of all trees, stumps, brush, large roots, rubbish, snow, water and other surface materials within the limits outlined in the Contract Documents or, if not designated, as required for the work.

B. All such material shall be removed from the project site to a location approved by the Engineer and disposed of as surplus.

C. All trees, shrubbery or other vegetation that are designated to remain or whose removal is not specifically required for construction shall be adequately protected and preserved as required by the Contract Documents.

D. When trees are to be protected or preserved, excavation and grubbing, except as directly required for construction, shall not be performed under the spread of tree branches.

E. No storage of topsoil, materials or construction equipment will be permitted under the radius of tree spread.

F. Where trees are removed, such removal shall include complete removal of stump and roots to a distance of no less than five feet all around the trunk of the tree. Roots shall be removed at greater distances if necessary to prevent interference with new construction.

3.02 TOPSOIL REMOVAL AND STORAGE

A. All topsoil, loam or other natural organic materials covering the work areas shall be removed and, when suitable for reuse as topsoil, shall be stockpiled.

B. Stockpiles shall be established only at locations approved by the Engineer and shall be maintained to prevent erosion and contamination until reuse; do not stockpile immediately adjacent to other stockpiled materials.

3.03 PAVEMENT REMOVAL

A. Asphalt and concrete pavements covering areas to be excavated shall be broken up, removed and then disposed of in accordance with the subsection below entitled Surplus Material.

B. Where roadway pavement work is required by this project, all pavement required to be removed shall be saw cut and removed such that the integrity of pavements to remain is protected.

3.04 STRUCTURE EXCAVATION

A. Minimum limits for structure excavation shall be the lines and subgrades shown on the Contract Drawings and a minimum distance of three feet outside the edge of slabs unless otherwise shown.

B. Excavations greater than 10 feet from original ground surface shall be supported in accordance with Section 02170.

C. Excavations that are not laterally supported shall be carried to slopes which are safe for the specific material in which the excavation is made. Undercutting of excavation faces will not be permitted. No claim may be made by the Contractor for extra work for damages resulting from slope instability or extra earthwork required to maintain safe slope conditions.

D. The Contractor shall determine the amount of additional excavation required beyond the minimum specified distance from the structure.

E. The Contractor shall be responsible for excavation of all types of materials encountered.

F. Preparation of the final subgrade shall be made with a smooth-edged bucket or blade so as to maintain the firm, undisturbed bearing character of the subgrade soils.

G. Prohibit disturbance of subgrade soils from equipment. Therefore, operate equipment on dunnage, at working levels above the subgrade, and/or utilize other procedures to maintain the firm, undisturbed character of the natural bearing soils. Incidental traffic of personnel and equipment across subgrades is prohibited.

H. Place indicated geotextile fabric and working mat immediately following excavation and subgrade approval; in a manner that preserves the undisturbed bearing character of the subgrade soils.

I. Excavations for structures shall not be excavated below the planned subgrade, unless required to remove materials which are determined to be unacceptable for the support of the structures. Unsuitable soils shall be excavated below the required subgrade to firm, undisturbed bearing materials and a backfill material installed as specified or indicated.

J. Such specified or indicated backfill material required as a result of the Contractor's actions or inactions in excavating to required subgrade levels shall be at the Contractor's expense.

K. Exposed subgrade surfaces shall remain undisturbed, drained, protected and maintained as uniform, plane areas, shaped as required to receive the foundation components of the structure.

L. If the Contractor does not properly control groundwater or otherwise neglects to conduct the excavation work properly such that the soils at the design excavation level are preserved in an undisturbed state, the Contractor shall remove the unsuitable material and replace it with filter fabric and acceptable backfill at the Contractor's own expense so that the condition of the subgrade meets the specified requirements before any work is placed thereon.

3.05 TRENCH EXCAVATION

A. Trench excavations shall be carried to the lines and subgrades shown on the Contract Drawings.

B. The Contractor is responsible for excavation of all material encountered, and trench widths for pipes shall be held within the minimum and maximum limits shown on the Contract Drawings except where safety standards dictate a modification in trench side slopes. Excavations greater than 10 feet from original ground surface shall be supported in accordance with Section 02170.

C. The Contractor is solely responsible for meeting all applicable safety standards.

D. Maximum payment limits are described in the Payment Items and on the Contract drawings, where unit price payment items are included.

E. Preparation of the final subgrade shall be made with a smooth-edged bucket or blade such that a flat bottom trench of undisturbed bearing soil and of allowable width is established at the required subgrade elevation for subsequent installation of pipe foundation material. If fill soils are present at pipe subgrade level, over-excavate to remove the fill soils to naturally deposited soils, unless otherwise directed.

F. If indicated on the Contract Drawings or when required as a result of unsuitable soil conditions, trench excavation shall be carried below the required subgrade and a special pipe foundation installed. In any event, the Contractor's operations shall result in stable trench walls and a firm, undisturbed stable base, free from standing water, in accordance with trench width requirements.

G. Bedrock, boulders and cobbles greater than 6 inches shall be trimmed back or removed on all faces of the trench so that no rock protrudes within 6 inches of any installed pipe.

H. Prohibit disturbance of subgrade soils from equipment. Therefore, operate equipment on dunnage, at working levels above the subgrade and/or utilize other procedures to maintain the firm, undisturbed character of the natural bearing soils. Incidental traffic of personnel and equipment is prohibited.

I. Place indicated geotextile fabric and pipe bedding immediately following excavation and subgrade approval, in a manner that preserves the undisturbed bearing character of the subgrade soils.

J. No trenches shall be left unsecured overnight.

3.06 UNAUTHORIZED EXCAVATION

A. The Contractor shall not be entitled to any compensation for unauthorized excavation carried beyond or below the lines and subgrades prescribed in the Contract Documents. The Contractor shall refill and compact such unauthorized excavations at his own expense and in conformance with the provisions of this subsection.

B. Should the Contractor, through negligence or for reasons of his own, carry his excavation below the designated subgrade, 3,000 psi concrete or such other material as may be approved by the Engineer, as specified in Section 02230 Selected Fill, shall be furnished and placed as backfill in sufficient quantities to reestablish the required subgrade surface. Granular material used for backfilling shall be spread and compacted in conformance with the requirements of this section. The cost of any tests required as a result of this refilling operation shall be borne by the Contractor at no additional cost to the Owner.

C. If the maximum widths of pipe trenches are exceeded, the installed pipes shall be fully cradled in a minimum of 6 inches of 3,000 psi concrete, at the Contractor's expense. Excavation below subgrade which is ordered by the Engineer because the normal subgrade has been disturbed by the Contractor's operations shall be considered as unauthorized excavation, and is subject to correction as outlined above.

3.07 SURPLUS MATERIAL

A. On-site reuse of surplus materials from excavations, shall be as approved by the Engineer. Otherwise, surplus material shall be hauled from the site, and the Contractor shall make all arrangements for disposal sites. All expenses for hauling and disposal shall be included by the Contractor in the cost of the prices bid for various earthwork which generates the surplus material. The Contractor shall investigate all aspects of surplus material disposing operations. All surplus

materials including pavement rubble, tree stumps, trash and debris shall be disposed of in a legal manner at an approved off-site facility. All vehicles hauling surplus material off-site utilizing public roadways shall have their loads covered in accordance with state and local laws.

B. Vehicles used to haul soft or wet material over streets or pavements shall be sufficiently tight to prevent material leakage on the streets or pavements. In all cases where any materials are dropped from the vehicles of the Contractor, the Contractor shall clean up the same immediately and keep crosswalks, street and pavements clean and free from debris.

C. Prior to disposal of surplus material at any off-site location, the Contractor shall obtain a written agreement between himself and the owner of the property on which the disposal of the material is proposed. The agreement shall state that the owner of the property gives permission for the Contractor to enter and deposit material of a particular classification on the owner's property at no expense to the project Owner, and shall include any other conditions pertinent to the situation as agreed upon by each party, including that the County of Onondaga, New York shall be indemnified and held harmless with regard to the disposal of the surplus materials on the owner's property. A copy of such agreement shall be promptly furnished to the Engineer.

3.08 MAINTENANCE OF EXCAVATIONS

A. All excavations shall be properly and legally maintained while open and exposed.

B. All excavations shall be enclosed with suitably supported temporary fencing, guardrails or barricades.

C. Sufficient and suitable barricades, warning lights, flood lights, signs, etc. to protect the public shall be installed and maintained at all times until the excavation has been backfilled and graded to a safe and satisfactory condition.

D. All barricades, signs and markers shall be reflective and shall conform to the requirements of the NYSDOT Manual of Uniform Traffic Control Devices.

3.09 BACKFILL MATERIALS

A. Granular materials required for filling, backfilling, bedding, subbase and other purposes shall be as shown on the Contract Drawings. Requirements for off-site granular materials are specified in Section 02230, Selected Fill.

B. Select fill materials shall be used as specified and indicated for backfill, and when excavated material cannot be used as backfill.

C. If the excavated material on site is approved for reuse as being suitable for filling or backfilling purposes, it shall be used.

D. On-site excavated material is designated Type "X" material.

E. When on-site materials are used, the Contractor shall remove all frozen material, stone larger than 6 inches in dimension, trash, and debris, from such material prior to placement.

F. The Contractor may, at his own expense, substitute other types of material specified elsewhere in place of on-site material, provided that all documentation requested by the Engineer, justifying such substitution is submitted by the Contractor sufficiently in advance to permit proper review by the Engineer and provided that all replaced material is disposed of as outlined in the subsection, Surplus Material.

3.10 GENERAL BACKFILLING REQUIREMENTS

A. Backfilling shall be started as soon as practicable and after structures or pipe installations have been completed and inspected, and/or concrete has acquired a suitable degree of strength.

B. Backfilling shall be carried on expeditiously thereafter.

C. Backfill shall be started at the lowest section of the area to be backfilled.

D. Natural drainage shall be maintained at all times.

E. Areas to be backfilled shall be inspected by the Engineer prior to backfilling operations.

F. No backfill shall be placed against foundation walls or structural members unless properly shored and braced or of sufficient strength to withstand lateral soil pressures.

G. Backfill material shall be inspected by the Engineer prior to placement and all roots, vegetation, organic matter, or other foreign debris shall be removed.

H. Backfill material shall not be placed when moisture content is too high to allow proper compaction.

I. When material is too dry for adequate compaction, water shall be added to the extent necessary.

J. No backfill material shall be placed on frozen ground, snow and/or ice, nor shall the material itself be frozen or contain frozen soil fragments when placed.

K. No calcium chloride or other chemicals shall be added to prevent freezing.

L. Material incorporated in the backfilling operation which is not in satisfactory condition shall be subject to rejection and removal at the Contractor's expense.

M. If the Contractor fails to stockpile and protect on-site excavated material acceptable for backfill, then the Contractor shall provide an equal quantity of acceptable off-site material at no expense to the Owner.

N. An appropriate geotextile layer shall be included along the bottom and the walls of the excavation. This geotextile layer shall also be laid at the interface between the top of the foundation materials and the common fill.

3.11 METHOD OF COMPACTION

A. General

1. The Contractor shall adopt compaction methods which will produce the degree of compaction specified herein, prevent subsequent settlement, and provide adequate support for the surface treatment, pavement, structure and piping to be placed thereon, or therein, without damage to the new or existing facilities.

2. Methods used shall avoid disturbance and/or damage to underlying fine-grained soils and to subsurface utilities.

3. Hydraulic compaction by ponding or jetting will not be permitted.

4. Backfill material shall not be left in an uncompacted state at the close of a day's operation.

5. Prior to terminating work, the final layer of compacted fill, after compaction, shall be rolled with a smooth-wheel roller if necessary to eliminate ridges of soil left by tractors or trucks used for compaction.

6. As backfill progresses, the surface shall be graded such that no ponding of water shall occur on the surface of the fill.

7. Fill shall not be placed on snow, ice or soil that was permitted to freeze prior to compaction. These unsatisfactory materials shall be removed prior to fill placement at the Contractor's expense.

B. Equipment

1. Generally, equipment for compaction shall be the largest equipment consistent with space limitations of the work areas, the need to protect adjacent facilities, and the need to protect subgrade soils.

2. Compaction of granular material adjacent to foundation walls, footings, piers, and in other confined areas shall be accomplished by means of a drum-type, power driven, hand-guided vibratory compactor, or by hand-guided vibratory plate tampers.

3. Hand or pneumatic tamping shall be used were other methods are not practical. Tools shall weigh at least 20 pounds. Hand tamping shall be performed with iron tampers having a tamping face not exceeding 25 square inches in area. The method shall consist of one person tamping for each person shoveling backfill into the excavation. The material shall be spread and compacted in layers not to exceed 6 inches prior to compaction. If

necessary, sprinkling shall be employed in conjunction with tamping. The percent of compaction of the material shall be as specified herein or as shown on the plans.

4. If the proposed method does not give the degree of compaction required, an alternate method shall be adopted, at no additional cost to the Owner, until the required compaction is achieved.

5. The moisture content of backfill or fill material shall be adjusted, if necessary, to achieve the required degree of compaction.

C. Natural Subgrade

1. The natural subgrade for all structural components or pipes shall consist of firm undisturbed natural soil, at the grades shown on the Contract Drawings.

2. After excavation to subgrade is completed, the subgrade shall be compacted.

3. Compaction shall be limited to that required to compact loose surface material and shall be terminated in the event that it causes disturbance to underlying fine-grained soils, as revealed by weaving or deflection of the subgrade under the compaction equipment.

4. If the subgrade soils consist of saturated fine or silty sands, silts, or clay, no compaction shall be applied.

D. Minimum Compaction Requirements

1. Unless specified otherwise on the Contract Drawings or in these specifications, the degree of compaction specified for the various items listed in Table 1 shall be the minimum allowable.

2. Unless the Contractor can successfully demonstrate that his methods will produce the required degree of compaction, materials to be compacted shall be placed in layers not exceeding the uncompacted thicknesses listed in Table 1.

3. The Engineer may order in-place density tests to ascertain conformance with the compaction requirements shown on Table 1.

4. Tests may be ordered for every 200 cubic yards of fill or backfill placed or at 75 linear foot intervals of pipeline backfilled, or frequencies deemed necessary by the Engineer to reliably and consistently determine the general compaction level being achieved.

5. The Contractor shall dig test holes at no additional cost to the Owner when requested for the purpose of taking an in-place density test below the current fill level.

6. The Contractor shall provide free access to trenches and fill areas for the purpose of making such tests. The Owner shall hire and the Contractor shall pay for the services of an independent testing laboratory to perform testing for quality assurance.

7. The Contractor shall anticipate time needed due to testing procedures and shall not have claims for extra compensation occasioned by such time.

8. All laboratory moisture/density testing will be conducted in accordance with ASTM Standard D1557 (Modified Method D) and D698 (Standard).

9. Minimum field compaction requirements in Table 1 are expressed as a percentage of the maximum dry unit weight of the material compacted in the laboratory.

TABLE 1
MINIMUM COMPACTION REQUIREMENTS

Type of Backfill	Max. Uncompacted Fill Layer Thickness (Inches)	Minimum Compaction (Percent)	Per ASTM Method	Frequency of In-Place Unit Weight Testing
1. Fill Beneath Structure Foundation Elements - Hand-Guided Compaction	6	95	D1557	Every 500 C.Y. of Fill Placement[2][3]

2.	Fill Beneath Structure Foundation Elements - Self-Propelled or Tractor-Drawn Compaction	8	95	D1557	Every 500 C.Y. of Fill Placement[2][3]
3.	Fill Under Slabs-On-Grade, and Backfill Around Structures and Above Footings	8	95	D1557	Every 500 C.Y. of Fill Placement[2][3]
4.	Fill Under Pipelines and Pipe Bedding	6	95 Note 1	D1557	Every 200 Linear Feet of Trench Per Foot of Fill
5.	Pipe Sidefills and Top 4 Feet of Trench Backfill Under Paved Areas and unpaved areas to support	6 Note 4	95	D1557	Every 200 Linear Feet of Trench Per Foot of Fill
6.	Trench Backfill Under Lawns, and Gardens	12	90	D698	Every 200 Linear Feet of Trench Per Foot of Fill
7.	Other Trench Backfill	12	90	D698	Every 200 Linear Feet of Trench Per Foot of Fill
8.	Embankments Not Supporting Pavement or Structures	12	90	D1557	Every 1,000 C.Y. of Fill Placement
9.	Rough Site Grading	12	90	D698	Every 1,000 C.Y. of Fill Placement
10.	Dense Graded Crushed Stone Pavement Subbase	6	98	D1557	Every 10,000 sq. ft. of Area as Pavement Subbase
11.	Rip-Rap	12	N/A	N/A	N/A

Notes:

1. Minimum of two passes of compaction equipment.
2. Minimum of one test per lift below individual structures.
3. Minimum of one test per foot of fill thickness for each 100 linear feet of backfill around structure perimeter.
4. Refer to Section 3.13 Backfill of Pipe Trenches for more specific requirements.

3.13 BACKFILL FOR PIPE TRENCHES

A. General

1. Pipe foundations, to a depth of 1 foot above the pipe, shall be placed in 6-inch layers and thoroughly compacted by approved mechanical methods

to ensure firm bedding and side support. Refer to Table 1, Nos. 4 and 5 for density requirements.

2. For plastic or polyethylene pipe materials, do not compact directly over pipe until 2 feet of cover has been installed. Compaction shall be applied on both sides of pipe or as otherwise specified. Pipe foundations are specified in the appropriate Specification Sections covering underground piping.

3. When backfill reaches 1 foot above the top of the pipe, the entire surface shall be compacted by mechanical means except as provided above.

4. The remainder of the trench shall be backfilled and compacted in accordance with subsection 3.12, Method of Compaction and by one of the following methods, depending on the nature of backfill material and location of trench.

B. Method A (All paved areas including driveways, parking areas, walks, etc.)

1. Backfill material shall be placed in layers not exceeding 6 inches thick and each layer thoroughly compacted with a backhoe mounted hydraulic or vibratory tamper, up to 4 feet under pavement (below bottom of pavement base). The upper 4 feet shall be compacted using hand-guided or small self-propelled vibratory or static rollers or pads in layers not exceeding 6) inches in thickness. Refer to Table 1, No. 5 for density requirements.

C. Method B (For lawns and non-paved areas)

1. Refer to Table 1, No. 7 for compaction and density requirements. Top of backfill shall be compacted by mechanical means and surface maintained prior to topsoil installation, fine grading, and seeding. Regrade and reseed if required to maintain grade within guarantee period.

3.14 TEMPORARY PAVING

A. The Contractor shall place temporary paving over all trenches and excavations within paved areas as soon as backfilling is completed. All backfilled trenches in paved areas shall be provided with temporary paving at

the completion of any days work operations, regardless of whether such paving must be removed for subsequent work.

B. All temporary paving materials and installation shall be in accordance with 01500 Temporary Facilities and Controls.

3.15 BACKFILL FOR STRUCTURES

A. Backfill shall be placed in layers not exceeding 8-inches thick and thoroughly compacted by mechanical means.

B. In addition, where pipelines or conduits are to be placed in structure backfill, all backfill under the pipes shall be Type F crushed stone unless a specific method of supporting such pipes is specified.

3.16 GRADING

A. After the completion of all fill and backfill operations, the Contractor shall grade the site to the lines, grades and elevations shown on the Contract Drawings, taking into account any subsequent site restoration and paving requirements.

B. Finish grading shall not be done until the installation of all underground utilities has been completed.

3.17 EXISTING FACILITIES

A. General

1. Some of the existing subsurface facilities likely to be encountered during construction of the work, or located in such close proximity to the work to be done under the Contract as to require special precautions and methods for their protection are indicated on the Contract Drawings.

2. These facilities include, but are not limited to, buildings, bridge abutments, tanks, sewers, drains, water mains, gas mains, utility poles, conduits and their appurtenances.
3. The sizes, locations, and heights or depths of existing facilities indicated are only approximate and the Contractor shall conduct operations with caution.

4. The Contractor shall not claim nor shall be entitled to receive compensation for damages sustained by reason of the inaccuracy of the information given or by reason of the Contractor's failure to properly maintain and support such structures.

5. There may be other subsurface facilities, the existence and/or location of which are not known, such as individual water and gas services, electrical conduits, telephone, storm drains, etc.

6. The Contractor shall consult with the owners of such facilities and, if possible, shall determine, prior to construction, the location and depth of any such facilities which may exist in the area to be excavated.

7. If underground facilities are known to exist in an area but their location is uncertain, the Contractor shall exercise reasonable care in his excavation technique to avoid damage to them.

B. Notification and Protection Procedures

1. Except where superseded by state or local regulations, or in the absence of any applicable regulations, the Contractor shall, as a minimum, include the following procedures during intrusive activities:

   a. Prior to any intrusive work

      i. Determine correct field location of all nearby underground facilities to arrange for the owner of the utilities to locate them.

      ii. Notify owners of nearby underground facilities when intrusive work is to take place, allowing them reasonable time to institute precautionary procedures or preventive measures which they deem necessary for protection of their facilities.

      iii. In cooperation with owners of nearby facilities, provide temporary support and protection of those underground

facilities which may be especially vulnerable to damage by virtue of their physical condition or location, or those which could create hazardous conditions if damaged.

b. Immediately notify any utility owner of any damage to his underground facilities resulting from the Contractor's operations, and arrange for repairs to be made as soon as possible, as coordinated with the owners of the damaged utilities and as reviewed with the Engineer. All costs associated with repair of damaged utilities will be borne by the Contractor.

c. In case of an electrical short, or escape of gas or hazardous fluids (resulting from damage to an underground facility), immediately notify the utility owner, and all persons who might be endangered.

C. Support of Existing Facilities

1. Existing facilities encountered within an excavated area shall be adequately supported, blocked and/or braced in a manner approved by the owner of the facility.

2. If required by the owner of such facility, such supports shall be left in place to the extent required. Backfilling and compaction under and around the facilities shall be accomplished with extreme caution so as not to disturb or damage the facility or its supports, and so as to prevent future settlement and possible rupture of the facilities.

3. Existing facilities removed by the Contractor in lieu of support of such facilities shall be replaced at the Contractor's cost.

D. Relocation of Existing Facilities (Except as Otherwise Provided)

1. Should the location or position of any gas or water pipe, public or private sewer or drain, conduit or other structure be such as, in the opinion of the Engineer, to require its removal, realignment or change, such alteration shall be without cost to

the Contractor for the work of removal, realignment, or change only; however, such structure shall be uncovered and supported or sustained by the Contractor at his own cost and expense before such removal or before and after such realignment or changes, as constituting part of his Contract.

2. The Contractor shall not become entitled to claim any damages or extra compensation for or on account of the presence of such structures or on account of any delay due to removal or rearrangement of the same, but the Contractor shall be entitled to such an extension of time for the completion of the work as the Engineer shall decide that the work has been delayed by the removal, realignment or change of such obstruction.

E. Pad/Protect Existing Paved Areas and Road Surfaces

1. If Contractor supervised, owned and/or operated tracked excavating machines are used on, near or over existing paved areas and/or road surfaces, then planking or other appropriate padding must be utilized by the Contractor to distribute the load over a large section of pavement.

2. All paved areas, road surfaces, sidewalks and curbs that are damaged or destroyed due to the Contractor's actions shall be properly and promptly restored. All such restoration shall be carried out in accordance with the Contract Documents, to the satisfaction of the Engineer and at no cost to the Owner.

END OF SECTION

SECTION 02305

SUBBASE

PART 1 GENERAL

1.01 SUMMARY

A. This section includes furnishing, placing and compacting a subbase course in conformity with the lines, grades, thicknesses and typical sections as shown on the Contract Drawings, or as determined by field conditions and directed by the Owner Representative.

1.02 RELATED SECTIONS

A. Section 02230 - Selected Fill

B. Section 02270 - Geotextile Fabric

C. Section 02300 - Earthwork

1.03 REFERENCES

A. Materials and installation shall be in accordance with the latest revisions of the following codes, standards, and specifications, except where more stringent requirements are specified herein:

1. New York State Department of Transportation (NYSDOT) Standard Specifications, latest revision.

1.04 SUBMITTALS

A. Submittals shall be submitted in accordance with the provisions set forth in the General Specifications.

B. Submittals shall contain source and supply of material showing its compliance with this specification.

C. Submit details of compaction equipment, including descriptions, product literature, specifications and rating, proposed for use in compacting backfill materials.

PART 2 PRODUCTS

2.01 SUBBASE MATERIALS

1. Provide subbase material which meets the specification material requirements of NYSDOT 304.12 Type 2 subbase.

PART 3 EXECUTION

3.01 PLACEMENT

A. Place the upper course material on the grade in a manner to minimize segregation, using equipment and procedures approved by the Engineer. Do not perform controlled spreading from piles dumped on the grade.

B. Should the subbase course become unstable at any time prior to the placement of the overlying course due to the gradation of the material furnished, correct the unstable condition to the satisfaction of the Engineer at no additional cost. Perform any required modification prior to placing the material on the grade.

3.02 COMPACTION

A. When the moisture content is within the limits for proper compaction, compact the material in accordance with the requirements of NYSDOT Standard Specifications Subsection 203-3.12, Compaction. The maximum compacted layer thickness shall not exceed 6 inches.

B. When a subbase course has been placed, but subsequent paving operations have been delayed so that the subbase has been disturbed by frost action, recompact the subbase where directed by the Engineer.

3.03 FINAL CONDITION

A. The movement of traffic over the final surface of the subbase may be permitted at locations designated by, and under such restrictions as ordered by the Engineer, provided such movements take place prior to the final finishing of this course to the specified tolerance. The movement of construction equipment on this course may be permitted at locations designated by and under such restrictions as ordered by the Engineer. At locations where permission is granted for such movement,

place and maintain the temporary surface of the course, upon which the construction traffic is running, at least 2 inches above the final surface of the course. Just prior to paving and after all construction traffic not required for the removal has ceased, remove 2 inch protective layer, and prepare and compact the exposed surface of the course to the specified tolerance.

B. If, in the opinion of the Engineer, the subbase is damaged or mixed with the subgrade or any other material due to the Contractor's operation, remove such material and replace it with the appropriate subbase material at no additional cost to the Owner.

3.04 TOLERANCE

A. Place subbase material so that after compaction the top surface of the course does not extend more than ¼ inch above nor more than ¼ inch below true grade for the course at any location.

END OF SECTION

SECTION 02370

EROSION AND SEDIMENT CONTROL PLAN

PART 1 GENERAL

1.01 SUMMARY

A. Provide labor, materials, equipment and services to perform operations required for the complete installation and construction of diversion swales, silt fences, stabilized construction entrances, and protection of catch basin inlets, and other permanent and temporary erosion and sedimentation control measures, and related work as required.

B. Provide additional erosion and sediment control measures for all areas disturbed by construction including soil stockpiles.

C. Comply with all requirements of the Stormwater Pollution Protection Plan (SWPPP) prepared for this project, if applicable.

1.02 RELATED SECTIONS

A. Section 02300, Earthwork
B. Section 02936, Lawn Seeding
C. Special Project Condition - P-013 Specific Permit Information

1.03 REFERENCE STANDARDS

A. New York Standards and Specifications for Erosion and Sedimentation Control (New York State Department of Environmental Conservation, or most recent version).

PART 2 - PRODUCTS

2.01 MATERIALS

A. The Contractor shall provide all necessary supervision, labor, equipment, and materials as needed to perform the specified work.

B. Materials shall include silt fence, straw bales, and/or other manufactured products to reduce erosion and control siltation.

2.02 SILT FENCE

A. Install silt fence where shown on the Contract Drawings.

B. The silt fence fabric shall meet the following specifications:

Fabric Properties	Minimum Acceptable Value	TEST METHOD
Grab Tensile Strength (lbs)	90	ASTM D-1682
Elongation at Failure (%)	50	ASTM D-1682
Mullen Burst Strength (lbs)	190	ASTM D-3786
Puncture Strength (lbs)	40	ASTM D-751 (modified)
Slurry Flow Rate (gal/min/sf)	.03	
Equivalent Opening Size	40-80	US Std Sieve CW-02215
Ultraviolet Radiation Stability (%)	90	ASTM G-26

C. Fence Posts (for fabricated units): The length shall be a minimum of 36 inches long. Wood posts shall be of sound quality hardwood with a minimum cross sectional area of 3.0 square inches. Steel posts shall be standard T and U section weighing not less than 1.00 pound per linear foot.

D. Wire Fence (for fabricated units): Wire fencing shall be a minimum 14 gage with a maximum 6-inch mesh opening, or as approved.

E. Prefabricated Units: May be used providing the units are installed in accordance with the most recent version of the New York State Standards and Specifications for Erosion and Sediment Control.

F. Anchors: Erosion control anchor material shall be as recommended by the manufacturer.

2.03 CATCH BASIN INLET PROTECTION

A. Provide an inlet barrier around all catch basin inlets where soil disturbance is occurring in areas tributary to the catch basin.

B. Refer to the Contract Drawings for construction details.

2.04 STABILIZED CONSTRUCTION ENTRANCE AND WASH AREAS

A. Stabilized construction entrances shall be located at all construction access points.

B. Refer to the Contract Drawings for construction details.

PART 3 - EXECUTION

3.01 INSTALLATION

A. Construction of temporary erosion control measures along the perimeter of the area under construction shall be completed prior to any site work.

B. All temporary erosion control measures will be maintained throughout the course of the site construction activities.

C. The Engineer may order additional erosion and sediment controls to be installed. The Contractor shall comply with the Engineer's request and immediately install the required controls.

3.02 MAINTENANCE

A. Silt fences shall be maintained and sediment materials removed when bulges develop in the silt fence, and as directed by the Engineer.

B. Components of the catch basin inlet protection system shall be maintained to prevent sediment from entering the catch basin inlet. Components of the system shall be removed and replaced if they are damaged or destroyed.

C. The stabilized construction entrance and wash area shall be maintained by periodically top dressing the area with additional stone, as required.

D. Carry out all inspection and maintenance activities required by the SWPPP, if applicable. The Contractor shall be required to inspect and maintain all erosion and sediment controls throughout the duration of the project and until complete stabilization of the site has occurred.

E. Once the project area restoration is established, and at the direction of the Engineer, the Contractor shall remove the temporary erosion and sediment control measures.

END OF SECTION

SECTION 02399

EXISTING SEWER ABANDONMENT

PART 1 - GENERAL

1.01 Summary

A. This Section specifies the abandonment of existing sewer piping or manhole structures where such structures or piping are replaced by new facilities and such piping or structures will not be required for further service. Such facilities will be removed from service as called for in the specifications, including other sections and as shown on the Contract Drawings.

1.02 Related Sections

A. Section 02140 Dewatering
B. Section 02170 Temporary Excavation Support
C. Section 02190 Maintenance of Sewer Flows
D. Section 02230 Selected Fill
E. Section 02300 Earthwork

PART 2 - PRODUCTS/EXECUTION

2.01 Products

A. Sewers to be abandoned by plugging shall be fitted with a mechanical plug. This plug shall fit securely in the pipe and have an expandable neoprene O-ring. The plug shall be an Aluminum Gripper Plug as manufactured by Cherne Industries, or equal.

PART 3 - EXECUTION

3.01 Sewer Abandonment

A. All exposed pipe segments no longer in service shall be permanently removed. Exposed pipe shall include all pipe within a depth of 3 feet of finished grade. Remaining pipe shall be bulkheaded water tight with brick, block, mortar, or non-shrink grout such that an approximately 12" thick wall is constructed across the opening of the abandoned pipe. The remainder of the abandoned pipe shall be filled with controlled low strength material.

B. Manhole structures to be abandoned shall be removed or demolished such that no part of the abandoned structure remains within two feet of final grade. Bulkhead pipe both sides of abandoned manhole. Use of manhole material to backfill structures is prohibited. Abandoned structures shall be filled with compacted Type R run-of-bank gravel to the required grade and surface. Salvage all frames, covers and castings from abandoned structures, and deliver to the Onondaga County Department of Water Environment Protection at the location designated by the Owner.

C. All excavated/disturbed earth areas shall be restored as specified or otherwise restored to conditions existing prior to construction. Details for this work are specified elsewhere.

END OF SECTION

VOLUME II OF II

CONTRACT DOCUMENTS

Lake Improvement Project Office

CSO 044 CONVEYANCE PROJECT

CONTRACT NO. 6 – GENERAL

PROJECT NUMBER 587948
BID REFERENCE 7022

JUNE 1, 2010
REVISED AUGUST 2010

COUNTY OF ONONDAGA, NEW YORK
DEPARTMENT OF WATER ENVIRONMENT PROTECTION

JOANNE M. MAHONEY, COUNTY EXECUTIVE
PATRICIA M. PASTELLA, P.E., COMMISSIONER

ENVIRONMENTAL ENGINEERING ASSOCIATES, LLP
6723 TOWPATH ROAD, BOX 66
SYRACUSE, NEW YORK 13214-0066

ONONDAGA COUNTY DEPARTMENT
OF WATER ENVIRONMENT PROTECTION

Lake Improvement Project Office

This document contains General Conditions and Specifications for projects administered through the Lake Improvement Project Office (LIPO) of the Onondaga County Department of Water Environment Protection (OCDWEP). As such, provisions and language of this document are unique and solely applicable for LIPO administered projects.

Sections have been arranged in the following general order:

ADDENDA
ADVERTISEMENT
DEFINITION OF TERMS
INFORMATION FOR BIDDERS
BID
AGREEMENT
SPECIAL PROJECT CONDITIONS
GENERAL PROVISIONS
GENERAL SPECIFICATIONS
TECHNICAL SPECIFICATIONS
PAYMENT ITEMS
INDEX TO DRAWINGS

TABLE OF CONTENTS

FOR

CSO 044 CONVEYANCES PROJECT

VOLUME I OF II

ADDENDA, if any, as identified in Article 6 of the Agreement

ADVERTISEMENT ..... AD-1 to AD-2

DEFINITION OF TERMS ..... DT-1 to DT-5

INFORMATION FOR BIDDERS

Section 1 – Project Information
1.01 Commencement and Completion ..... IFB 1-1
1.02 Existing Conditions and Subsurface Conditions ..... IFB 1-1
1.03 Index of Drawings ..... IFB 1-2
1.04 Contract Drawings Furnished to Bidders ..... IFB 1-2
1.05 Contract Drawings Furnished to Contractors ..... IFB 1-2
1.06 Taxes ..... IFB 1-2

Section 2 – Instructions to Bidders
2.01 Qualifications of Bidders ..... IFB 2-1
2.02 Bidder's Responsibility ..... IFB 2-1
2.03 Addenda and Interpretation ..... IFB 2-1
2.04 Bid Instructions ..... IFB 2-1
2.05 Bid Security ..... IFB 2-2
2.06 Discrepancy in Bids ..... IFB 2-2
2.07 Lowest Bidder ..... IFB 2-2
2.08 Award of Contract ..... IFB 2-2
2.09 Liquidated Damages for Failure to Execute Contract ..... IFB 2-3
2.10 Prior Approval of Equipment, Methods or Materials ..... IFB 2-3
2.11 Estimated Quantities ..... IFB 2-3
2.12 Unbalanced Bids ..... IFB 2-3

Section 3 – Onondaga County MBE/WBE and Minority Workforce Requirements
3.01 Minority/Women Business Enterprise Workforce Requirements ..... IFB 3-1
3.02 Summary of Forms ..... IFB 3-2
3.03 Special Provisions Concerning Utilization of M/WBE and Minority and Female Workforce Requirements ..... IFB 3-3
3.04 Contractor Obligations ..... IFB 3-11

Section 4 - Insurance and Bonds and Hold Harmless, Defense and Indemnification
4.01 Contractor's Obligations ..... IFB 4-1

Section 5 - Conflict of Interest
5.01 Contractor's Obligations ..... IFB 5-1

TABLE OF CONTENTS

INFORMATION FOR BIDDERS (continued)

Section 6 – County, New York State, and Federal Provisions
6.01 County Provisions ..... IFB 6-1
6.02 New York State Provisions ..... IFB 6-1
6.03 Amended Consent Judgment Project Conditions – Time is of the Essence IFB 6-2
6.04 Project Labor Agreement (PLA) ..... IFB 6-2
6.05 Federal Requirements and Contract Provisions for the Appropriations Grants (USEPA-Region 2) ..... IFB 6-3
6.06 Federal Requirements and Contract Provisions for the American Recovery and Reinvestment Act (ARRA) Fund Recipients ..... IFB 6-3

APPENDICES TO INFORMATION FOR BIDDERS

A Onondaga County MBE/WBE Forms
B Sample Workers' Compensation Forms
C New York State Department of Labor Contract Requirements and Wage Rate Schedule
D Standard Clauses for New York State Contracts
E Standard Clauses for NYSDEC Contracts
F Project Labor Agreement (PLA)
G Federal Requirement Provisions
H Federal Requirement Provisions for the ARRA Fund Recipients and Davis-Bacon (Federal) Prevailing Wage Rates

BID

1.01 Certificate of Non-Collusion B-1
1.02 Bidder's Examination of Documents and Work Site B-1
1.03 Bidder's Acknowledgment of Contract Time and Liquidated Damages B-1
1.04 Bidder's Offer B-1
1.05 Bid Form B-2
1.06 Bid Acceptance B-3
1.07 Bidder's Acknowledgment of Labor Law Requirements B-3
1.08 Bid Withdrawal B-3
1.09 Bid Security B-3
1.10 Bid Signature Block B-4
Resolution - Corporate Bidders B-5
Bid Security B-6
Statement of Surety's Intent B-7
Certification of Non-Segregated Facilities B-8
Buy American Requirements B-9
Buy American – Project Components Waiver Request Form B-10
Conceptual M/WBE Work Plan B-11
DBE Subcontractor Utilization Form B-13
DBE Subcontractor Performance Form B-14

AGREEMENT

Article 1 - Description A-1
Article 2 - Performance A-1
Article 3 - Compensation A-1
Article 4 - Contract Documents A-1
Article 5 - Failure to Comply A-1

TABLE OF CONTENTS

AGREEMENT (continued)

Article 6 - Governing Law A-1
Article 7 - Venue A-1
Article 8 - Appropriations A-2
Article 9 - Suspension and Debarment A-2
Article 10 - Severability A-2
Article 11 - Insurance and Bonds and Hold Harmless, Defense and Indemnification A-2
Article 12 - Conflict of Interest A-11
Article 13 - Assignment A-12
Article 14 - Independent Contractor A-12
Article 15 - Licenses and Permits A-12
Article 16 - Contract Modifications A-13
Article 17 - Statutory Compliance A-13
Article 18 - Clauses Required by Law A-13
Article 19 - Addenda A-13
Signature of Parties A-13
Acknowledgments A-14
Fair Employment Clause A-15
Conflict of Interest Affidavit A-16
Certificate of Insurance A-17

SPECIAL PROJECT CONDITIONS

P-001 Location and Description of Project SPC-1
P-002 Receipt and Opening of Bids SPC-1
P-003 Pre-Bid Meeting/Site Visit SPC-2
P-004 Revisions to Information to Bidders SPC-2
P-005 Owner's Engineer SPC-4
P-006 Time is of the Essence SPC-4
P-007 Order of Work SPC-5
P-008 Pipe Material References SPC-6
P-009 Project Funding Agencies SPC-6
P-010 Contractor's Insurance SPC-6
P-011 Hold Harmless, Defense and Indemnification SPC-6
P-012 Site Safety Responsibilities and Roles SPC-7
P-013 Specific Permit Information SPC-8
P-014 Contaminated (Impacted) Materials Requirements SPC-10
P-015 Storage of Equipment and Materials SPC-11
P-016 Non-Working Hours Construction Noise Limits SPC-11
P-017 Work Near Gas Mains SPC-11
P-018 Equipment Manufacturer's Electronic Manuals and Information SPC-12
P-019 Borings and Other Subsurface Information SPC-13
P-020 Disposal of Construction and Demolition Debris SPC-13
P-021 Reference Information SPC-13
P-022 City of Syracuse Survey Monuments SPC-14
P-023 Air Quality SPC-14
P-024 Noise Meter SPC-14
P-025 Schedule SPC-14
P-026 Disruption of Owner's Operations SPC-15
P-027 Inspection of the Work SPC-15
P-028 Maintenance of Sewer Flows SPC-15

TABLE OF CONTENTS

SPECIAL PROJECT CONDITIONS (continued)

P-029 Shop Drawing Submittal Procedures SPC-15
P-030 Schedule of Equipment Testing and Manufacturers' Services SPC-16
P-031 Performance Affidavits SPC-17
P-032 Beneficial Occupancy of Operating Equipment and Systems SPC-17
P-033 Pest Control SPC-17
P-034 Owner's Right to Stop/Suspend Work and/or Terminate Contract SPC-21
P-035 Restoration of Existing Landscaping SPC-23
P-036 Temporary Security Fencing SPC-24
P-037 Overhead and Profit on Adjustments in Contract Price SPC-24
P-038 Concrete Bench Wall Work SPC-24
P-039 Geotechnical Instrumentation and Pre-Construction Recording on Private Properties SPC-24
P-040 Relocation of Existing Utilities by Utility Owners SPC-25
P-041 Provisions for Steel Price Adjustment SPC-25
P-042 Provisions for Fuel Price Adjustment SPC-27
P-043 Verification of Existing Weir Elevations at Existing Regulator Structures SPC-27
P-044 Temporary Parking Area at 807-809 South Avenue SPC-28
P-045 Provisions for Asphalt Price Adjustment SPC-29
P-046 ARRA Funding Requirements SPC-30
P-047 Construction Equipment and Vehicles SPC-30

APPENDICES TO SPECIAL PROJECT CONDITIONS

Appendix A
ARRA Posters

GENERAL PROVISIONS

Section 1 - Contractor's Obligations
1.01 Contractor's Work ..... GP 1-1
1.02 Representations of Contractor ..... GP 1-1
1.03 Permits, Laws and Regulations ..... GP 1-1
1.04 Contractor's Address ..... GP 1-2
1.05 Emergency Calls ..... GP 1-2
1.06 Contractor's Agents, Superintendents and Foreman ..... GP 1-2
1.07 Contractor's Personnel ..... GP 1-2
1.08 Safety and Accident Prevention ..... GP 1-3
1.09 Hazardous Communication Standard Compliance ..... GP 1-4
1.10 Patents ..... GP 1-5
1.11 No Claims Against Individuals ..... GP 1-5
1.12 Contractor's Title to Material ..... GP 1-5
1.13 One-Year Guarantee ..... GP 1-5
1.14 Underground Utilities ..... GP 1-6

Section 2 - Assignments and Subcontracts
2.01 Assignment ..... GP 2-1
2.02 Subcontracts ..... GP 2-1
2.03 Subcontractor's Wage Rates ..... GP 2-1

TABLE OF CONTENTS

GENERAL PROVISIONS (continued)

Section 3 - Owner's Representatives
3.01 Owner ..... GP 3-1
3.02 Engineer ..... GP 3-1
3.03 Owner's Representative ..... GP 3-1
3.04 Inspection of the Work ..... GP 3-1
3.05 No Waiver of Rights; No Estoppel ..... GP 3-2

Section 4 - Time Provisions
4.01 Commencement and Completion of Work ..... GP 4-1
4.02 Pre-construction Meeting ..... GP 4-1
4.03 Progress and Coordination Meetings ..... GP 4-1
4.04 Rate of Progress ..... GP 4-1
4.05 Charges for Delay ..... GP 4-2
4.06 Extension of Time ..... GP 4-3
4.07 No Damage for Delay GP-4-3

Section 5 - Changes
5.01 Owner's Changes in the Work ..... GP 5-1
5.02 Contractor's Claims ..... GP 5-1
5.03 Adjustments in Contract Price ..... GP 5-1
5.04 Modification and Change Order Procedures ..... GP 5-5
5.05 Change in Contract Time Associated With Modifications ..... GP 5-7
5.06 Adjustment of Contract Time ..... GP 5-8
5.07 Payment of Claims and Disputed Amounts ..... GP 5-10

Section 6 - Payments
6.01 Estimated Quantities ..... GP 6-1
6.02 Prices ..... GP 6-1
6.03 Breakdown of Lump Sum Items ..... GP 6-2
6.04 Current Estimate and Payment ..... GP 6-2
6.05 Payment for Delivered Equipment and Materials ..... GP 6-2
6.06 Owner's Right to Withhold Payments ..... GP 6-3
6.07 Beneficial Occupancy and Substantial Completion ..... GP 6-3
6.08 Payment at Substantial Completion (Final Payment) ..... GP 6-5
6.09 Acceptance of Final Payment Constitutes Release ..... GP 6-6
6.10 Completion of Punch List Work ..... GP 6-6
6.11 Remedial Restoration ..... GP 6-6

Section 7 - Termination of Contract
7.01 Owner's Right to Stop Work or Terminate Contract for Cause ..... GP 7-1
7.02 Termination for Convenience ..... GP 7-2
7.03 Owner's Right to Make Deductions or Set-Offs in Event of Termination or Stoppage of Work ..... GP 7-2

Section 8 - Miscellaneous Provisions
8.01 Provisions Required by Law Deemed Inserted ..... GP 8-1
8.02 Unlawful Provisions Deemed Stricken ..... GP 8-1
8.03 Reuse of Documents ..... GP 8-1

TABLE OF CONTENTS

APPENDICES TO GENERAL PROVISIONS

Appendix A
Certification of Subcontractor Payment Status (Form GP-001)
Application and Certificate for Payment
Project Closeout/Final Payment Checklist

GENERAL SPECIFICATIONS

S-001 Intent of Contract Documents GS-1
S-002 Precedence of Contract Documents GS-2
S-003 Published Standards and Specifications GS-2
S-004 Care and Protection of Work GS-2
S-005 Collateral Work GS-3
S-006 Access to Work GS-3
S-007 Covering of Underground Work - Authorization of Owner GS-3
S-008 Work in Inclement Weather GS-4
S-009 Working Hours GS-4
S-010 Disruption of Owner's Operations GS-4
S-011 Equipment/Process Isolation GS-4
S-012 Lines, Grades and Elevations and Restoration of Survey Markings GS-4
S-013 Shop Drawings GS-5
S-014 Layout and Coordination Drawings GS-6
S-015 Record Drawings GS-7
S-016 Material, Equipment and Workmanship GS-8
S-017 Equivalent Product and Substitutions GS-9
S-018 Delivery and Storage of Materials and Equipment GS-9
S-019 Material Testing GS-11
S-020 Old Materials GS-10
S-021 Disposal of Spoil GS-11
S-022 Cleaning GS-11
S-023 Ground Available to Contractor GS-11
S-024 Protection, Security and Maintenance of Site GS-11
S-025 Protection and Restoration of Existing Structures, Facilities and Features GS-12
S-026 Existing Features Found Different GS-14
S-027 Pollution Control and Purchase and Use of Recycled Products GS-15
S-028 Maintenance of Flow GS-16
S-029 Maintenance of Utilities GS-16
S-030 Work by Utilities GS-16
S-031 Maintenance of Traffic GS-17
S-032 Utilities Used by Contractor GS-17
S-033 Temporary Facilities GS-17
S-034 Hangers, Supports and Restraints GS-19
S-035 Chases, Openings, Sleeves, Inserts, Embedded Items GS-19
S-036 Labeling GS-19
S-037 Electrical Interconnection Data GS-20
S-038 Equipment Manufacturers' Manuals and Information GS-22
S-039 Services of Manufacturer's Factory Representatives - Startup and Training GS-24
S-040 Beneficial Occupancy of Operating Equipment and Systems GS-25
S-041 Temporary Construction Fencing GS-27
S-042 Storage of Flammable or Explosive Materials on Site GS-27

TABLE OF CONTENTS

APPENDICES TO GENERAL SPECIFICATIONS

Appendix A
Equipment Manual Transmittal Form
Electrical Interconnection Data Form
Substitution Procedures and Application Form

TECHNICAL SPECIFICATIONS

Division 1 – General Requirements
01323 Color Audio-Video Pre-Construction Records
01500 Temporary Facilities and Controls
01501 Project Sign
01510 Engineer's Field Office

Division 2 – Site Work
02015 Geotechnical Instrumentation
02120 Waste Movement, Transportation, and Disposition
02140 Dewatering
02170 Temporary Excavation Support
02190 Maintenance of Sewer Flows
02222 Controlled Blasting
02224 Impacted Material Handling (with Attachment A: Environmental Response Plan)
02229 Waterway Protection
02230 Selected Fill
02270 Geotextile Fabric
02300 Earthwork
02305 Subbase
02370 Erosion and Sediment Control Plan
02399 Existing Sewer Abandonment

TABLE OF CONTENTS

FOR

CSO 044 CONVEYANCES PROJECT

VOLUME II OF II

TECHNICAL SPECIFICATIONS

Division 2 – Site Work (Continued)
02501 Underground Pressure Piping Installation
02510 Water Distribution System
02511 Replacement of Lead and Galvanized Steel Water Services
02514 Precast Concrete Manholes, Catch Basins and Structures
02515 Walks and Curbs
02527 Prestressed Concrete Cylinder Pipe (PCCP)
02530 Sewage and Drainage Piping Installation
02618 Ductile Iron Pipe
02620 Polyvinyl Chloride (PVC) Non-Pressure Pipe
02621 Fiberglass Reinforced Polymer (FRP) Pipe
02622 Large Diameter High Density Polyethylene (HDPE) Pipe
02623 Small Diameter High Density Polyethylene (HDPE) Pipe
02624 Perforated Plastic Pipe
02646 Rip Rap
02675 Pressure and Leakage Testing
02721 Paving and Surfacing
02765 Sewer Cleaning
02890 Traffic Signs
02891 Relocating Traffic Signs
02936 Lawns
02950 Planting

Division 3 – Concrete
03100 Concrete Formwork
03200 Concrete Reinforcement
03250 Concrete Joints and Accessories
03300 Cast-In-Place Concrete
03301 Tightness Testing of Fluid Containment Concrete Structures
03350 Concrete Finishes
03370 Concrete Curing and Protection
03600 Grout

Division 5 – Metals
05500 Miscellaneous Fabrications
05505 Concrete and Masonry Anchors

Division 9 – Finishes
09900 Field Painting

Division 11 – Equipment
11296 Conveyance Flushing System

TABLE OF CONTENTS

TECHNICAL SPECIFICATIONS (continued)

Division 15 – Mechanical
15101 Miscellaneous Valves ad Piping Appurtenances

Division 16 – Electrical
16055 Electrical Work
16161 Control Panels and Enclosures
16484 Contactors and Motor Starting Equipment
16900 Auxiliary Controls and Relays
16950 Testing and Inspection

Division 17 – Instrumentation and Control Systems
17105 Fiber Optic Communication Systems

PAYMENT ITEMS

Section 1 – Stipulated Maximum Lump Sum Items
Item 1.1 Mobilization/Demobilization

Section 2 – Stipulated Minimum Unit Price Items
Item 2.1 Excavation Below Subgrade
Item 2.2 Miscellaneous Excavation

Section 3 – Lump Sum Items
Item 3.1 Miscellaneous Work
Item 3.2 Maintenance and Protection of Traffic
Item 3.3 Bioretention Basin
Item 3.4 Maintenance of Sewer Flows
Item 3.5 Site Security
Item 3.6 Temporary Parking Area at 807-809 South Avenue
Item 3.7 Clean Existing 144-Inch Diameter Pipe
Item 3.8 Modifications to Existing CSO 044
Item 3.9 Temporary Excavation Support System
Item 3.10 Dewatering
Item 3.11 Connection to Existing Vacuum Flushing Chamber VFC-2
Item 3.12 Conveyance Flushing Chambers
Item 3.13 Manhole MH-1
Item 3.14 Relocate Existing Water Mains – C-1 and C-2 to C-3
Item 3.15 Modifications to Existing Facilities
Item 3.16 Plantings
Item 3.17 Grouting of Existing Rip Rap
Item 3.18 Equipment and Electrical Service and Controls

Section 4 – Unit Price Items

Item 4.1 Restoration of Non-Paved Surfaces
Item 4.2 Rock Extrication
Item 4.3 Controlled Low Strength Material (CLSM)
Item 4.4 Select Fill Materials

TABLE OF CONTENTS

PAYMENT ITEMS (continued)

Item 4.5 Temporary Excavation Support System Materials Left in Place as Ordered by Engineer
Item 4.6 Geotextile Stabilization (Woven) Fabric
Item 4.7 Catch Basins
Item 4.8 PVC Sewer Pipe – 12-Inch-Diameter
Item 4.9 HDPE, FRP or PCCP Sewer Pipe – 96-Inch-Diameter
Item 4.10 Precast Type 2 Manholes (Depth up to 8 feet) – 48-Inch-Diameter, Storm Sewer
Item 4.11 Additional Depth of Precast Type 2 Manholes – 48-Inch-Diameter
Item 4.12 Bioretention Swales
Item 4.13 Precast Stormwater Storage Tank
Item 4.14 Remove Existing Trolley Rail
Item 4.15 Sidewalk Restoration
Item 4.16 Embedded Preformed Detectable Warning Units
Item 4.17 Granite Curbing
Item 4.18 Concrete Foundation for Street Pavement
Item 4.19 Bituminous Asphalt Pavements
Item 4.20 Mass Concrete
Item 4.21 Replacement of City of Syracuse Survey Monuments
Item 4.22 Replacement of Sewer Vents and Cleanouts
Item 4.23 Water Service Replacements
Item 4.24 Cast Iron Soil Pipe
Item 4.25 Removal/Disposal of Non-Hazardous Industrial Solid Waste Generated During Earthwork
Item 4.26 Removal/Disposal of Construction/Demolition Debris Generated During Earthwork
Item 4.27 Geotechnical Instrumentation
Item 4.28 Replacement of Lead and Galvanized Steel Water Services
Item 4.29 Trench Drain
Item 4.30 Connection to Existing Catch Basins
Item 4.31 DIP Sewer Pipe – 12-Inch-Diameter

Section 5 – Allowance Items

Item 5.1 Miscellaneous Existing Utility Modifications Allowance
Item 5.2 Relocation of Existing Utilities by Utility Owners Allowance
Item 5.3 Mitigation Measures for Groundwater Dewatering
Item 5.4 Steel Price Adjustment
Item 5.5 Fuel Price Adjustment
Item 5.6 Asphalt Price Adjustment
Item 5.7 Additional Site Restoration Allowance

INDEX TO DRAWINGS

General Drawings

Cover Sheet
G-1 Index of Drawings, Symbols, Notes and Abbreviations
G-2 General Notes
G-3 Key Plan And Survey Control
G-4 Site Layout And Security Plan
G-5 Utility Modifications

TABLE OF CONTENTS

INDEX TO DRAWINGS (continued)

G-6 Plan and Profile Sta. 12+00 To 17+00
G-7 Miscellaneous Profiles
G-8 Utility Relocation Details
G-9 Water Main and Utility Crossing Details
G-10 Water Main Details
G-11 South Avenue Regulator Structure Plan and Section
G-12 Conveyance Flushing Chamber A Plan and Sections
G-13 Conveyance Flushing Chamber B Plan and Section
G-14 Traffic Control Notes and Details
G-15 Traffic Control Plan
G-16 Erosion and Sediment Control Plan
G-17 Erosion and Sediment Control Details
G-18 Sanitary Sewer Lateral Details
G-19 Pipe Foundation/Trench Details and Geotechnical Instrumentation Plan
G-20 Geotechnical Instrumentation Details
G-21 Road Reconstruction Plan and Profile
G-22 Road Reconstruction Profiles/Bank Stabilization Plan and Details
G-23 Restoration Details
G-24 Restoration Details
G-25 Restoration Details
G-26 Storm Sewer System Details
G-27 Storm Sewer Manhole Details
G-28 Miscellaneous Details
G-29 Miscellaneous Details
G-30 Miscellaneous Details
G-31 Miscellaneous Details
G-32 Miscellaneous Details
G-33 Existing 144-Inch Plan and Profile Sta. 0+00 to 6+00
G-34 Existing 144-Inch Plan and Profile Sta. 6+00 to 12+00

Landscape Architecture Drawings

LA-1 Landscape Plan 1
LA-2 Landscape Plan 2
LA-3 Landscape Plan 3

Structural Drawings

S-1 Structural Abbreviations and General Notes
S-2 Standard Details
S-3 Conveyance Flushing Chamber A Plans
S-4 Conveyance Flushing Chamber A Sections
S-5 Conveyance Flushing Chamber B Plans and Sections
S-6 South Avenue Regulator Plans and Sections

Electrical Drawings

E-1 Abbreviations, Symbols, Notes and Miscellaneous Details
E-2 Electrical Site Plan, Schematic and Details

TABLE OF CONTENTS

SUPPLEMENTAL INFORMATION – PART OF THE CONTRACT DOCUMENTS
(Provided on CD enclosed within Volume II of the Contract Documents)

1. Geotechnical Data Report, CSO 044 Conveyance Project, prepared by Brierley Associates, LLC, April 2010 (Revised May 2010).

2. Geotechnical Baseline Report, CSO 044 Conveyance Project, prepared by Brierley Associates, LLC, May 2010.

3. Procedures Governing the Acceptance and Treatment of Groundwater and Other Contaminated Wastewater, Onondaga County Department of Water Environment Protection, January 4, 2008.

REFERENCE INFORMATION – NOT PART OF THE CONTRACT
(Provided on CD enclosed within Volume II of the Contract Documents)

1. Phase I Environmental Assessment, Midland Avenue Regional Treatment Facility and Conveyances, Phase Three Project, prepared by Environmental Engineering Associates, LLP, January 27, 2006.

2. Phase II Environmental Assessment, Midland Avenue Regional Treatment Facility and Conveyances, Phase Three Project, prepared by Environmental Engineering Associates, LLP, April 2007.

3. Phase IA Literature Review and Archeological Sensitivity Assessment, Midland Avenue Regional Treatment Facility and Conveyances Phase Three Project, prepared by Hartgen Archeological Associates, Inc., January 2006.

4. Phase IB Archeological Field Reconnaissance, Midland Avenue Regional Treatment Facility and Conveyances Phase Three Project, prepared by Hartgen Archeological Associates, Inc., October 2006 (updated March 8, 2007).

All Supplemental and Reference Information may be examined at the Engineer's office, Environmental Engineering Associates, LLP, 6723 Towpath Road, Syracuse, NY 13214-0066.

SECTION 02501

UNDERGROUND PRESSURE PIPING INSTALLATION

PART 1 GENERAL

1.01 SUMMARY

A. This Section includes labor, materials, equipment, tools, and services required for the installation of underground pressure piping on this project.

B. Piping shall be furnished and installed of the materials and sizes and at elevations and locations shown on the Contract Drawings and/or as designated in these specifications or those Sections covering the specific pipe type.

1.02 RELATED SECTIONS

A. Section 02270 Geotextile Fabric
B. Section 02300 Earthwork
C. Section 02510 Water Distribution System
D. Section 02618 Ductile Iron Pipe
E. Section 02675 Pressure and Leakage Testing
F. Section 03300 Cast-in-Place Concrete

1.03 REFERENCES

A. Material and installation shall be in accordance with the latest revisions of the following codes, standards, and specifications, except where more stringent requirements are specified herein:

1. American Society for Testing and Materials (ASTM)
2. American Water Works Association (AWWA)
3. American National Standards Institute (ANSI)

PART 2 PRODUCT

2.01 MATERIALS

A. All piping materials shall be in accordance with the appropriate section of these specifications.

2.02 METALLIC LOCATOR TAPE

A. Locator tape shall be required to be installed for all buried non-metallic utilities and is intended to allow for future locating of buried non-metallic utilities. Tape shall be of metallic material with a corrosion resistant coating, and be a minimum of ¼-inch wide. Tape shall be installed along the full length of the pipe and in accordance with manufacturer's recommendations.

PART 3 EXECUTION

3.01 PIPE FOUNDATIONS

A. All pipes, fittings or specials which are to be installed in the open trench excavation shall be properly bedded in, and uniformly supported on pipe foundations of the various types specified herein and shown on the Contract Drawings.

B. Trenches shall be excavated to the necessary depth and maintained in accordance with Section 02300 Earthwork, prior to installing the foundation.

C. Trenches shall be dewatered and all work performed in a dry trench.

D. Bedding material shall be spread in a maximum of 8-inch layers to the midpoint of the pipe and each layer shall be compacted until the required total depth of bedding has been built up.

E. Compaction methods include hand tamping with T-bars, flat heads, shovel slicing, as well as mechanical compactors.

F. The Contractor shall perform his bedding operations with care to maintain line and grade.

G. The pipe foundation above the midpoint of the pipe shall be spread and compacted in 12-inch layers to 12 inches above the top of the pipe. When PVC, plastic or polyethylene pipe is used, do not compact directly over pipe until the depth of backfill has reached 2 feet above the top of the pipe.

1. Type I - Normal Soil Conditions

   a. When ordered by the Engineer, the pipe shall be supported on Type I foundation.

   b. The trench shall be excavated from 4 to 12 inches deeper than the bottom of the pipe, depending on the diameter of the pipe as shown on the Contract Drawings.

   c. Type "F" material per Section 02230, Selected Fill, shall be furnished, placed and compacted in the trench for its full width such that, the required minimum depth of Type "F" material remains between pipe and undisturbed trench bottom, as noted on the Contract Drawings.

   d. Suitable holes shall be provided in the trench bottom to permit adequate bedding of bells, couplings, or similar projections.

   e. The run-of-crusher stone shall extend upward to the springline of pipe for concrete, steel, and ductile iron pipes, and to a point 12 inches over the top of the pipe for the PVC pipe.

   f. If required on the Contract Drawings or ordered by the Engineer, geotextile/filter fabric material shall be utilized in Type I foundation and shall be installed in accordance with manufacturer's recommendation. Geotextile filter fabric shall be as per Section 02270 Geotextile. Minimum lap of three feet of overlapping fabric shall be provided at all joints in the fabric.

2. Type II - Unstable Soil Conditions

   a. Unless otherwise shown on the Contract Drawings, or when ordered by the Engineer, all pipe shall be supported on Type II foundation.

   b. The trench shall be excavated to the depth shown or as required below the bottom of the pipe.

c. A 12-inch depth layer of Type F crushed stone, shall then be furnished and placed in the trench for its full width. All material shall be spread in layers and each layer shall be compacted until their respective total depths have been built up as required. The No. 3 stone depth will normally extend up to an elevation 4, 6 or 8 inches below the bottom of the pipe, depending upon the pipe diameter but may be installed at greater depth as warranted by soil conditions to provide proper support. In such cases, an additional depth of Type F stone shall be installed to bring the foundation to levels such to support the Type I foundation.

d. Bedding materials shall then be installed in accordance with Type I Pipe Foundation requirements. All installed sheeting below an elevation established at 12 inches above the top of the pipe shall be left in place and undisturbed.

e. Geotextile/filter fabric material shall be utilized in Type II foundation and shall be installed in accordance with manufacturer's recommendation. Geotextile filter fabric shall be as per Section 02270 Geotextile. Minimum lap of three feet of overlapping fabric shall be provided at all joints in the fabric.

3. Type III - Concrete Encasement

a. When specifically called for on the Contract Drawings, or when ordered by the Engineer, the pipe shall be supported on Type III foundation.

b. For pipes 36-inches in diameter and smaller, the trench shall be excavated to a depth below the bottom of the pipe equal to one-quarter of the inside diameter of the pipe, or 6 inches, whichever is greater.

c. For pipes larger than 36-inches in diameter, the trench shall be excavated to a depth below the bottom of the pipe equal to one-quarter of the inside diameter of the pipe, or 12 inches, whichever is greater.

d. The excavated space shall then be completely filled with, and the entire pipe encased in, concrete such that the minimum concrete encasement at any point around the outside barrel of the pipe measures 6 inches thick. The total minimum width of the concrete encasement shall equal the outside diameter of the pipe plus 12 inches and such minimum width shall be constant for the entire length of the encasement. Unless shown otherwise on the Contract Drawings, concrete shall be Mix "C" (maximum slump of 4 inches), and the top surface of the encasement shall be screeded flat.

e. Concrete mix, formwork, curing, etc., shall be in accordance with the requirements of the Section 03300, Cast-in-Place Concrete. Freshly placed concrete shall be maintained free from ground water and no backfilling of the trench shall begin until initial set has taken place, but not less than three hours has lapsed after the encasement has been cast. Backfill a depth of 12 inches over top of concrete before beginning compaction with mechanical equipment.

3.02 PIPE INSTALLATION

A. Proper and suitable tools and appliances for convenient handling and laying of pipe and fittings shall be used. Care shall be taken to prevent entrance of dirt or foreign matter, and to prevent damage of pipe lining and coating. All pipe shall be carefully examined for defects and no piece shall be laid which is known to be defective. If any defective piece should be discovered after having been laid, it shall be removed and replaced with a sound one in a satisfactory manner, by the Contractor, to the lines, grade and depth of cover shown on the Contract Drawings.

B. Pipe and fittings shall be laid on stable foundations, free from standing water, and trimmed to the shape of the

pipe to be installed. Stones two inches or larger shall be removed from the bearing surface of the pipe foundation. At the joints, enough depth and width shall be provided to permit the pipe layer to reach entirely around the pipe so that the joints may be made in a proper manner. When laid in tunnels, pipes shall be blocked in such a manner as to take the weight off the bells. Pipe laid in normal trench excavation shall not be laid on wood blocking. Mechanical type joints shall be tightened within the AWWA recommended torque range.

C. The following sources shall be reviewed by the Contractor for installation guidelines and requirements:

Pipe Material	Sources
Ductile Iron Pipe	AWWA Standard C600; Specifications; Contract Drawings; Manufacturer's recommendations.
Copper Pipe	Specifications; Contract Drawings; Manufacturer's recommendations.

D. Unless otherwise shown on the Contract Drawings, the minimum total finished cover over the top of the pipe barrel of all pipe shall be 5-feet 0-inches.

E. Installation of Ductile Iron Pipe

1. Ductile iron pipe shall be installed in accordance with the applicable provisions of ANSI/AWWA C600, and the pipe manufacturer's recommendations.

2. Polyethylene encasement for ductile iron pipe shall be provided and installed in accordance with AWWA C105/ANSI A21.5 for all ductile iron pipe.

3. All ductile iron pipe and fittings shall be handled with padded slings or other appropriate equipment. The use of cables, hooks or chains will not be permitted.

4. Couplings shall be installed in accordance with the manufacturer's instructions. Coupling and bolts shall be completely coated with a bitumastic seal coat.

5. Install concrete thrust blocks where indicated on the Contract Drawings. Thrust block installation

shall be in accordance with the Contract Drawings, and as specified elsewhere.

6. Push-on joint locking gasket and mechanical joint retainer type restraints shall be installed where indicated on the Contract Drawings and in accordance with manufacturer's recommendations.

3.03 TEMPORARY PLUGGING

A. At all times when pipe laying is not actually in progress, the open ends of the pipes shall be closed temporarily with pipe plugs or by other means such that there is no possibility of any water or foreign material entering the line. If water is in the trench when work is resumed, the plugs shall not be removed until all possibility of water entering the pipe has passed.

3.04 PIPELINE CLEANING

A. At the conclusion of the pipe installation, the Contractor shall thoroughly clean all new pipes by flushing with water or other means to remove all dirt, stones, pieces of wood, etc., which may have entered during the construction period. If, after this cleaning, any obstructions remain, they shall be corrected to the satisfaction of the Engineer. Pipes shall be flushed at a rate of 2.5 feet per second for a suitable duration.

3.05 TESTING

A. All testing for pressure pipes shall be in accordance with Section 02675 Pressure and Leakage Testing.

B. All testing for water distribution system piping shall be in accordance with Section 02510, Water Distribution Systems.

3.06 ENCASEMENT

A. In the event an underground pressure pipe 10 inches in diameter or smaller is shown under a base slab and there is less than 30 inches separation between the top of the pipe and the bottom of the slab, then the pipe shall be encased in concrete for its entire length under the slab in accordance with the details shown on the Contract Drawings. Where no detail is shown, encasement shall be formed to provide a minimum of 8 inches of concrete cover reinforced with #5 reinforcing bars spaced 12 inches each way. When the top of the pipe is within 12 inches of the

bottom of the slab, the encasement shall be tied to the base slab with reinforcing.

- END OF SECTION -

SECTION 02510

WATER DISTRIBUTION SYSTEM

PART 1 GENERAL

1.01 SUMMARY

A. This Section includes the requirements for, and installation of all piping, valves, and appurtenances necessary for potable water distribution systems.

1.02 RELATED SECTIONS

A. Section 02230 Selected Fill
B. Section 02300 Earthwork
C. Section 02501 Underground Pressure Piping Installation
D. Section 02618 Ductile Iron Pipe
E. Section 02675 Pressure and Leakage Testing

1.03 REFERENCES

A. Material and installation shall be in accordance with the latest revisions of the following codes, standards, and specifications, except where more stringent requirements have been specified herein:

1. American National Standards Institute (ANSI)
2. American Water Works Association (AWWA)
3. American Society for Testing and Materials (ASTM)
4. Occupational Safety and Health Administration (OSHA)
5. National Sanitation Foundation (NSF)
6. National Fire Protection Association (NFPA)

1.04 SUBMITTALS

A. Submittals shall be submitted in accordance with the provisions set forth in the Special Project Conditions, General Provisions, and General Specifications.

B. Prior to obtaining any material in connection with this Section, detailed shop drawings on all material shall be submitted.

C. Certified copies of the manufacturers' affidavits stating that all materials were manufactured and tested in accordance with applicable provisions in the above-specified standards shall be submitted.

D. Other Submittals

1. Manufacturers' technical data for each product.

1.05 DELIVERY, STORAGE AND HANDLING

A. Deliver and store valves, 16-inch and larger, in shipping containers with labeling in place.

PART 2 PRODUCT

2.01 MANUFACTURERS

A. Acceptable manufacturers of Ductile Iron Pipe are as specified in Section 02618 Ductile Iron Pipe.

B. The following are acceptable manufacturers of valves:

Resilient Seated Gate Valves

1. Mueller Company A-2360
2. Kennedy Valve
3. Approved Equal

Butterfly Valves

1. Henry Pratt Company
2. Approved Equal

C. The following are acceptable manufacturers of hydrants:

Fire Hydrants

1. Kennedy Valve
2. American Darling
3. Approved Equal

D. The following are acceptable manufacturers of valve boxes:

1. Clow F-2454 (with F-2490 cover)
2. Approved Equal

2.02 PIPE

A. All potable water distribution system piping shall be ductile iron pipe (DIP) as shown on the Contract Drawings.

2.03 GATE VALVES FOR BURIED SERVICE, 2-1/2 INCH THROUGH 16 INCH

A. Buried in-line gate valves shall be resilient-seated in conformance with ANSI/AWWA C509.

B. Gate valves shall have an iron body, a non-rising manganese bronze stem, and a triple o-ring seal stuffing box. Body and bonnet bolts shall be Type 304 stainless steel.

C. Gate valves shall be furnished with a standard 2 inch square operating nut and shall open right.

D. Ends shall be mechanical joint as shown on the Contract Drawings.

E. Resilient wedge shall be constructed from cast iron that is fully encapsulated in molded rubber conforming to ASTM D2000.

F. All interior and exterior iron surfaces of the gate valve shall be coated with manufacturer-applied, 10-mil thick fusion epoxy coating in conformance with AWWA C550. Coating shall be NSF certified.

G. Gate valves shall be rated for a maximum working pressure of 250 psi.

H. Gate valves shall be provided with extension stem operators such that operating nut shall be 3-inches below valve box cover. Extension stem operators shall be Mueller A-26441, or equal.

2.04 BUTTERFLY VALVES FOR BURIED SERVICE, 18-INCH AND LARGER

A. General

1. Valve bodies shall be cast iron or ductile iron and shall be AWWA c 504 short body design.

2. Valve seats shall be of a synthetic rubber compound and shall be retained in the body by mechanical means, or shall be bonded and vulcanized. Valve seats shall not be retained on the disc.

3. Adjusting segments and retainer screws, if used, shall be Type 304 or Type 316 stainless steel.

4. Valve seats shall be a full 360E without interruption.

5. Valve seats shall be adjustable and field replaceable without dismantling the operator, disc, or shaft, and without removing the valve from the line, for valves 30 inches or larger.

6. Ends shall be mechanical joint.

7. Valve discs (vanes) shall be constructed of either cast iron ASTM A-48 or ASTM A-126 with stainless steel edge or ductile iron ASTM A-536 with stainless steel edge.

8. All valves shall be furnished with Type 304 or Type 316 stainless steel shafts and self-lubricating, sleeve-type non-metallic bearings.

9. The valves will be designed so that no leakage occurs at the shutoff pressure, which will be the test pressure specified for the respective pipeline.

10. Manual valve operators shall be fully compatible with the valve supplied and shall be furnished by the valve manufacturer.

11. Butterfly valves shall be Open-Right.

12. Operators shall conform to AWWA C504.

2.05 HYDRANTS

A. Hydrants shall be dry barrel-type in conformance with AWWA C502.

B. Hydrants shall have a 5-1/4 inch diameter main valve opening. Main valve shall be reversible, compression-type that closes with pressure for a positive seal. Main valve shall be constructed of rubber conforming to ASTM

D2000 with a cast iron valve plate. Main valve seat rings shall be bronze in conformance with ASTM B584.

C. Rubber o-ring gaskets shall be provided at the bonnet, safety, and shoe flanges.

D. Operating nut shall be bronze, pentagon shaped with 1-1/2 inch point to flat dimension. A bronze hold-down nut and integral rubber weather seal shall be provided to discourage unauthorized tampering.

E. Stem shall be steel conforming to ASTM A576, Grade B. A stainless steel safety stem coupling shall be provided at the safety flange designed to pull free if hydrant is hit, preventing damage to the stem and main valve.

F. Hydrant shall be furnished with a sealed oil filled reservoir to provide positive lubrication of stem threads each time hydrant is operated. Reservoir shall be sealed leaktight with double Buna-N o-rings conforming to ASTM D2000.

G. Hydrant shall be furnished with dual bronze drain valves.

H. Nozzles shall be bronze, threaded, field replaceable, rubber o-ring sealed, with neoprene rubber gaskets. Each nozzle shall have a large radius and full flow opening for low friction loss. Nozzles shall be provided with a cap, heavy duty non-kinking chain, and stainless steel nozzle lock. Hydrants shall be furnished with the following nozzles:

1. One 4-1/2 inch I.D. pumper outlet.
2. Two 2-1/2 inch I.D. hose outlets.

Pumper outlet nozzle threads shall be in conformance with City of Syracuse Standard fire hose coupling threads.

Hose outlet nozzle threads shall be in conformance with City of Syracuse Standard fire hose coupling threads.

I. Hydrants shall be rated for a maximum working pressure of 250 psi.

J. All hydrants shall be marked with a diagramatic hydrant sign. The sign shall be reflective red on white background and shall be in compliance with NFPA 170. The sign shall be mounted on a post support and shall be located 5 feet above grade. The sign shall be placed at

a location to be determined by the Engineer and the County Fire Coordinator Office Representative.

2.05 VALVE BOXES

A. Boxes shall be cast iron screw-type with 5-1/4 inch inside diameter.

B. All box covers shall have the word "WATER" casted into them.

2.06 FINISHES

A. Ductile iron pipe shall be furnished as specified in Section 02618 Ductile Iron Pipe.

B. All interior and exterior iron surfaces of gate valves shall be coated with manufacturer-applied 10-mil thick fusion epoxy coating in conformance with AWWA C550. Coating shall be ANSI/NSF 61 certified.

C. Interior of the hydrant shoe shall be coated with 10-mils of manufacturer-applied fusion epoxy coating in conformance with AWWA C550. Exterior shall be painted OSHA safety yellow.

D. Exterior of valve boxes shall be coated with a bitumastic seal coat.

2.07 BUILDING POTABLE WATER SERVICES

A. Pipe

1. The pipe shall be ASTM B88 Type K copper water tube and shall meet the requirements of ANSI/AWWA Standard C800.

2. The size of the pipe shall be one (1) inch unless indicated otherwise on the Contract Drawings.

B. Fittings

1. Fittings shall be copper alloy castings from copper alloy no.C83600 in accordance with ASTM B62 or ASTM B584

2. Fittings shall be flared style unless called for otherwise.

3. Lead-Pac pipe coupling shall be model Q22-24, Q12-34-Q32-24, or Q22-34, as manufactured by the Ford Meter Box Company, or approved equal.

4. Flared copper pipe coupling shall be model C22-34, as manufactured by the Ford Meter Box Company or approved equal.

5. All fittings shall meet the requirements of ANSI/AWWA Standard C800.

6. All fittings shall be certified to be in accordance with NSF61

C. Valves

1. Ball corporation stops shall be 1-inch diameter and constructed of bronze with a flared joint. Ball corporation stops shall be model FB600-4 as manufactured by the Ford Meter Box Company, or approved equal.

2. Ball curb stops shall be 1-inch diameter and constructed of bronze with a flared joint. Ball curb stops shall be model B22-444 as manufactured by the Ford Meter Box Company, or approved equal.

PART 3 EXECUTION

3.01 INSTALLATION

A. Ductile Iron Pipe

1. All ductile iron pipe for water distribution systems shall be installed in accordance with Section 02501 Underground Piping Installation and Section 02618 Ductile Iron Pipe.

2. Wrap all pipe, fittings and valves in polyethylene film as per AWWA C 105.

B. Gate Valve and Valve Box

1. Install valve on cement block support so that valve is supported independently of pipeline.

2. Install buried gate valve in accordance with manufacturer's recommendations and as specified herein.

3. Place and compact Type "F" Select Fill around valve up to base of valve box. Refer to Section 02230 Selected Fill.
4. Center and plumb valve box over operating nut. Set box cover flush with finished grade.

C. Hydrants

1. Request final field location of the proposed hydrant from the Engineer and the County Fire Coordinator Office Representative prior to installation. Hydrants and assemblies shall be installed in accordance with manufacturer's recommendations, at locations shown on the Contract Drawings, and as specified herein.

2. Install hydrant vertical and plumb with the casting ring or mark (located just below the breakaway safety flange on the hydrant barrel) at grade. When there is no casting ring or mark, install hydrant with breakaway safety flange a minimum of 2 inches above grade.

3. Install hydrant such that the 2-½ inch hose outlets centerline is a minimum of 36 inches, but not more than 42 inches above finished grade.

D. Final Adjustments

1. Adjust all hydrants, valve boxes, curb boxes, manhole covers and other facilities to finished grade, as required.

3.02 FIELD TESTS AND INSPECTIONS

A. All testing and flushing shall be in accordance with the applicable standards referenced in this Section and Section 02675 Pressure and Leakage Testing. Provide a minimum 72 hours notice to the Engineer prior to testing. The Engineer and County Fire coordinator Office Representative must be present during testing for the test to be considered valid.

B. The Contractor shall complete a Flushing, Leakage Testing and Chlorination Tabulation Sheet (Attachment A) for each water main section installed and provide it to the Engineer at the completion of each test.

3.03 DISINFECTION

A. All pipe and fittings connected to and forming part of the potable water distribution system shall be disinfected in full accordance with both the requirements of AWWA Standard C601 for Disinfecting Water Mains, and the State (or County) Department of Health. Methods used shall be acceptable to the Engineer. The continuous feed method shall be used for chlorine application.

B. All new piping shall be filled with not less than 50 mg/l nor more than 75 mg/l available chlorine and retained in the main for not less than 24 hours. During this time, all valves and hydrants in the section treated shall be operated in order to disinfect these appurtenances. At the end of this 24-hour period, the treated water shall contain no less than 25 mg/l available chlorine throughout the length of the main. All chlorine introduced into the system shall be totally dissolved. The introduction of solid hypochlorite directly into the system is prohibited.

C. Disinfection tests shall be repeated as often as necessary until the minimum residual chlorine content of 25 mg/l at the end of the disinfection period has been reached. The chlorine solution shall be thoroughly flushed out prior to placing the new sections of main in service. The Contractor is cautioned that the spent chlorine solution must be disposed of in a manner acceptable to the Owner, in an area where its effects will not be detrimental to animal, plant or aquatic life.

D. After final flushing and before the water main is replaced in service, a water sample or samples from the end of each main shall be collected and analyzed for total coliform, in accordance with local and/or State (or County) Health Department procedures. Analysis shall be performed by health department approved laboratories. If Health Department drinking water standards for total coliform are not met, the disinfection procedures and coliform testing shall be repeated. The Contractor shall bear all necessary costs of coliform testing.

3.04 WATER DISTRIBUTION CONNECTION SCHEDULE

Water Distribution Connection Schedule					
Connection Identification No.	**Pipe Diameter (inch)**	**Street Location**	**Shown on Drawing No.(G-X)**	**Maximum Time Out of Service Allowable (1)**	**Concurrent Connection**
C-1	8	South Ave.	8	1 month	None
C-2	10	South Ave.	8	4 hours	C-3
C-3	6	West Castle St.	8	4 hours	C-2

Notes:

1. Indicates the maximum time the existing water main(s) may be out of service during the connection to the new main. Time shown is for all concurrent connections to be completed.

END OF SECTION

(ATTACHMENT A FOLLOWS)

FLUSHING, LEAKAGE TESTING AND CHLORINATION TABULATION SHEET

Job No. _____ Location _____
Contract No. ___ Contractor _____
Project _____
Contractor's Representative _____ Observed by _____

FLUSHING

Date _____ Time _____ Weather _____ Temp _____
Section Flushed _____ ft. of ____-inch diameter pipe
Line Flushed _____ hrs. _____ min. @ _____gal/min
Line Flushed Through _____ Manhole # _____

PRESSURE AND LEAKAGE TESTING

Date _____ Weather _____ Temperature _____
Section Tested _____
___ ft. of ___-inch diameter _____ pipe in ___-ft. laying lengths
Time Started _____ Time Finished _____ Elapsed Time _____
Test Pressure: Start _____ psi Finish _____ psi
Water to Make up Initial Pressure _____ gallons
Allowable leakage, as calculated _____ gallons
_____ gallons (allowable leakage from AWWA C600 or Technical Provisions Section _____)

Pass ____ Fail ____

$$L = \frac{SD\sqrt{P}}{133{,}200^*}$$

L = Allowable leakage in gallons/hour
S = Length of pipe tested (linear feet)
D = Nominal diameter of pipe (inches)
P = Average pressure during test, psi

*Refer to C600 for additional allowance leakage against closed metal-seated valves.

CHLORINATION

Date _____ Weather _____ Temperature _____
Section Tested _____
___ ft. of ___-inch diameter _____ pipe in ___-ft. laying lengths
Time Started _____ $[Cl_2]$ _____mg/l
Time Finished _____ $[Cl_2]$ _____mg/l
Elapsed Time _____
Dates and Times of Samples collected _____

SECTION 02511

REPLACEMENT OF LEAD AND GALVANIZED STEEL WATER SERVICES

PART 1 GENERAL

1.01 SUMMARY

A. This section includes labor, material, equipment, tools and services required to replace existing lead and galvanized steel water service(s).

B. The work requires the installation of a new copper service from the public water main to the curb stop.

1.02 RELATED SECTIONS

A. Section 02300 Selected Fill
Section 02510 Water Distribution System
Section 02515 Walks and Curbs
Section 02721 Paving and Surfacing
Section 02936 Lawn Seeding
Section 02950 Planting

1.03 REFERENCES

A. American Society for Testing and Materials (ASTM)
B. American National Standards Institute (ANSI)
C. American Water Works Association (AWWA)

1.04 SUBMITTALS

A. Submittals shall be in accordance with the provisions set forth in the Special Project Conditions, General Provisions, and General Specifications.

B. Shop drawings showing piping layout, location of trenching, tunneling, location of curb stop, location of existing and proposed corporation stop, plant and landscaping features, site structures, and schedule of fittings to be used.

C. Manufacturer's data and literature for all products.

D. Samples of materials proposed to be used, upon request of the Engineer.

PART 2 PRODUCTS

2.01 MATERIALS

A. Pipe

1. The pipe shall be ASTM B88 Type K copper water tube and shall meet the requirements of ANSI/AWWA Standard C800.

2. The size of the pipe shall be one (1) inch unless indicated otherwise on the Contract Drawings.

B. Fittings

1. Fittings shall be copper alloy castings from copper alloy no.C83600 in accordance with ASTM B62 or ASTM B584

2. Fittings shall be flared style unless called for otherwise.

3. Lead-PaK pipe coupling shall be as manufactured by the Ford Meter Box Company, or approved equal.

4. Pack Joint pipe coupling shall be as manufactured by the Ford Meter Box Company, or approved equal.

5. Flared copper pipe coupling shall be model C22-34, as manufactured by the Ford Meter Box Company or approved equal.

6. All fittings shall meet the requirements of ANSI/AWWA Standard C800.

7. All fittings shall be certified to be in accordance with NSF61

C. Valves

1. Ball corporation stops shall be 1-inch diameter and constructed of bronze with a flared joint. Ball corporation stops shall be model FB600-4 as manufactured by the Ford Meter Box Company, or approved equal.

2. Ball curb stops shall be 1-inch diameter and constructed of bronze with a flared joint. Ball curb stops shall be model B22-444 as manufactured by the Ford Meter Box Company, or approved equal.

PART 3 EXECUTION

3.01 EXAMINATION AND PREPARATION

A. The Contractor shall verify the existing field conditions and determine the location of existing utilities, including services to the building. The Contractor shall verify that the existing conditions are as anticipated.

B. The Contractor shall be responsible for contacting underground facilities protection organizations prior to commencing work.

C. Permits

1. The Contractor shall be responsible for obtaining and fulfilling the requirements of the following permits:

a. A City of Syracuse Department of Water - Water Service Replacement Permit shall be required for each service to be replaced. In addition, the Contractor shall demonstrate to the City Inspector competence in tapping a cast iron water main and installing flared fittings.

b. An Onondaga County plumbing permit shall be required for each service to be replaced.

c. Any other permits which are required to complete the work.

3.02 INSTALLATION OF WATER SERVICES

A. Installation of all piping, valves, and fittings shall be in accordance with the manufacturer's technical data and installation instructions.

B. The Contractor shall install the pipe using one continuous length with no intermediate fittings between the point of connection to the curb stop and the existing water main.

1. The Contractor shall install the new water service in accordance with one of the following conditions:

   a. When existing private service is copper, connect the new curb stop to the existing service with flare connection coupling, model C22-34 as manufactured by the Ford Meter Box Company, or approved equal.

   b. When existing private service is lead, connect the curb stop to the existing service using a short section of copper piping attached to the curb stop and to a Lead-Pak coupling as manufactured by the Ford Meter Box Company, or approved equal. The existing lead service shall be cut no less than 6-inches and no more than 12-inches beyond the curb stop.

   c. When the existing private service is galvanized steel, connect the curb stop to the existing services using a short section of copper piping attached to the curb stop and to a Pack Joint coupling as manufactured by the Ford Meter Company, or approved equal. The existing galvanized steel service shall be cut no less than 6-inches and no more than 12-inches beyond curb stop.

2. The Contractor shall route piping to avoid existing plants and structures and to minimize disruption of the property. The Contractor shall avoid undue interference with the normal use of the property and take measures to maintain existing use of the property.

3. The new water service shall follow the alignment of the existing water service within 2 feet laterally and shall be a minimum of 5 feet below final finished grade and no greater than 6 feet below final finished grade. The City of Syracuse Department of Water shall review and approve the alignment of the replacement water service if site conditions warrant alignment of the replacement water service outside of the above description.

4. The Contractor shall handle and install all materials in accordance with recognized manufacturer or industry standards and shall use proper tools and employ high quality workmanship.

C. Cleaning and Disinfection

1. The Contractor shall perform his work in such a manner as to prevent contamination of the service line and water supply.

2. Prior to connecting the new service to the existing piping, the Contractor shall thoroughly flush the new service line with potable water until the water runs clear for at least 1 minute.

3. Flushing shall be at the maximum rate that is possible through the pipe being installed after making suitable provisions for water disposal which do not significantly affect the maximum pipe flow rate possible without such provisions.

4. The Contractor shall dispose of the water flushed without damaging property and in accordance with local laws and regulations.

D. If necessary based on conditions present, or if directed by the City of Syracuse or by the Onondaga County Health Department, the Contractor shall disinfect the new service line in accordance with procedures approved by the agency.

E. Testing and Inspection

1. Prior to backfilling the pipe, fittings and connections, the Contractor shall subject the pipe, fittings and connections to a pressure and flow test relying on the water main pressure available in the existing public water main. Correct any deficiencies noted.

2. Prior to backfilling the pipe, fittings and connections, the Contractor shall obtain an inspection of the new service by the City of Syracuse Department of Water and acceptance by the City's inspector. Inspections by the City of Syracuse Department of Water shall only be performed Monday through Friday between the hours of 9:00 a.m. and 3:00 p.m. The Contractor shall give the City of Syracuse Department of Water at least one day's notice prior to the inspection. Acceptance by the inspector will be based on, but not limited to, the following:

a. Observation of the installation to verify compliance with the Contract Documents.

b. Witnessing of the flow rate which can be obtained from the water service prior to the meter.

c. Witnessing the lack of any perceptible leakage by conventional listening techniques as well as observing the installation under pressure available in the existing public water main for a minimum of 15 minutes.

d. Determination that the workmanship is of sound professional quality.

3.03 BACKFILLING AND RESTORATION

A. The Contractor shall backfill the trench and compact to subgrade elevation as specified in Section 02300, and as shown on the Contract Drawings.

B. The Contractor shall restore paved and landscaped areas as specified in Sections 02515, 02721, 02936 and 02950, and as shown on the Contract Drawings.

C. The Contractor shall return disturbed portions of the property and other disturbed structures to a condition equal to or better than the condition at the start of the construction, as determined by the Engineer.

3.04 SCHEDULE

A. The following existing services have been identified as lead or galvanized steel and shall be replaced in accordance with this Section. If additional existing lead and/or galvanized steel services are encountered during the work of this Contract, those services shall also be replaced.

Address	Owner	Material[1]
615-617 W. Castle St.	Dunham, Clarence E.	Lead
805 South Ave.	Syracuse Model Neighborhood Co. RP	Lead

Note:

1. Materials identified as "unknown" shall be field verified and replaced in accordance with this Section if found to be lead or galvanized steel.

3.05 COMPLETION OF WORK

A. The installation of the piping system, backfilling and temporary restoration work specified shall be completed within 8 hours from the initiation of on site operations or by 5:00 pm, whichever shall occur first. If this condition cannot be met, the Contractor shall provide temporary water service to all affected property owners.

END OF SECTION

SECTION 02514

PRECAST CONCRETE MANHOLES,
CATCH BASINS, AND STRUCTURES

PART 1 GENERAL

1.01 SUMMARY

A. The Contractor shall furnish and install precast concrete manholes, catch basins, and structures of the type(s) shown on the Contract Drawings and as specified herein. The work shall include the following:

1. Required inlet and outlet pipe connections for new and/or existing sewers, frames and covers, masonry, concrete, reinforcing steel, special pipe fittings, catch basin hoods, precast units, all other materials, tools and equipment necessary to produce complete manholes.

2. Manholes and structures shall be watertight. Testing shall be in accordance with Section 02530, Sewage and Drainage Piping Installation. Associated work such as excavation, backfilling, grading and paving is specified elsewhere.

1.02 RELATED SECTIONS

A. Section 02230 Selected Fill
B. Section 02300 Earthwork
C. Section 02530 Sewage and Drainage Piping Installation
D. Section 03300 Cast-in-Place Concrete

1.03 REFERENCES

A. Material and installation shall be in accordance with the latest revisions of the following codes, standards, and specifications, except where more stringent standards have been specified herein:

1. American Society for Testing and Materials (ASTM)

2. Occupational Safety and Health Administration (OSHA)

3. American Association of State Highway and Transportation Officials (AASHTO)

4. New York State Department of Transportation (NYSDOT)

1.04 SUBMITTALS

A. Submittals shall be in accordance with the provisions set forth in the Special Project Conditions, General Provisions, and General Specifications.

B. Prior to obtaining any material in connection with this Section, detailed shop drawings and details of all precast concrete units shall be submitted.

C. Other Submittals

1. Pipe to manhole/structure joint details.

2. Non-shrink grouts.

3. Shop drawing of manhole steps, including attachment details if not integrally cast with manhole.

4. Shop drawings of manhole frames and covers.

5. Shop drawings of catch basin hoods, including attachment details.

6. Six (6) complete sets of structural design calculations for each precast structure supplied. Design calculations shall be performed by a professional engineer licensed in the State of New York. Design calculations shall be submitted for record purposes only and will be retained by the Engineer.

7. Shop drawings showing typical design, reinforcing, and manufacturing details of precast concrete bases.

8. Schedule of all manholes, catch basins or structures with type size, locations, numbers, dimensions, etc.

1.05 QUALITY ASSURANCE

A. Only precast reinforced concrete sections made in a plant currently approved by NYSDOT for manufacture of concrete pipe, shall be used to construct manholes.

B. The manufacturer shall certify that all precast concrete structures furnished to this project shall conform to the requirements of the Contract Documents and shall conform

to ASTM Specification C-478, or ASTM Specification C-789 or C-850, as appropriate, except as modified and/or supplemented in this section of the specifications.

PART 2 PRODUCTS

2.01 MANUFACTURERS

A. The following are acceptable manufacturers:

1. Syracuse Concrete Pipe and Products
2. Binghamton Precast and Supply
3. Kistner Precast Concrete Products
4. The Fort Miller Company, Inc.
5. Precast Concrete Sales Co.
6. Approved equal

2.02 PRECAST CONCRETE BASES

A. Bases may be precast concrete, except when restricted by Part 2.03 of this Section. Their design and fabrication shall conform to the following:

1. The general requirements of this section.

2. The provisions of ASTM Specification C-478.

3. The basic dimensions shown on the Contract Drawings.

B. The horizontal joint at the top of the base shall be compatible with that of the precast wall sections.

C. The precast bases shall be uniformly supported on a compacted, level, geotextile lined foundation mat of NYSDOT Type 304 - 2.02 Type 2 subbase.

1. The foundation mat shall bear on sound undisturbed earth, lined with geotextile.

2. The minimum depth of the mat shall be twelve inches throughout, but shall vary to the depth necessary to reach undisturbed earth.

3. Minimum diameter of the mat shall be the outside diameter of the base plus two feet.

D. The precast bases shall be manufactured with openings in the wall to receive the ends of the pipe, and shall be accurately set to conform with line and grade of the pipe.

1. Openings shall be precast or machine cored.

2. All connections between manholes/structures and pipes shall be watertight using flexible rubber sleeves attached to the manhole/structure at the opening and connected to the pipe by means of stainless steel straps and bolts.

3. The flexible rubber sleeves shall be installed in accordance with the manufacturer's instructions.

4. Where sleeve sizes are not commercially available due to either the size of the pipe to be connected or due to the outside diameter of the pipe not allowing a proper sleeve fit, the Contractor shall connect the pipe to the manhole/structure opening using an elastomeric waterstop gasket.

5. At manholes connecting to existing sewers the pipe shall be accurately positioned in the openings, properly secured against movement, and the remaining annular space between the pipe wall and the base completely packed with A-H Axpandcrete S Hi-Flow, by Anti-Hydro International, Masterflow 713 by Master Builders, or Five Star Grout by Five Star Products, Inc.; or approved equal.

6. Before the grout has set, the Contractor shall recheck invert elevations of the ends of the pipe, and perform any adjustments which are necessary to establish the required line and grade of the pipe.

E. Manhole bases shall conform to the details shown on the Contract Drawings.

E. All precast concrete bases shall be free from cracks, damaged joints, exposed reinforcing, aggregate pockets, spalls, and dimensional distortions or other irregularities. Any rejected units shall be tagged and removed from the job site immediately.

2.03 CAST IN PLACE CONCRETE BASES

A. Except when casting in place is specifically called for on the Contract Drawings, or when manholes are to be constructed over existing pipes, manhole bases may be precast or cast in place concrete at Contractor's option. Bases for manholes to be constructed over existing pipes shall be cast in place. Cast in place concrete bases shall be constructed utilizing Class B 3000 psi concrete (see Section 03300, Cast-in-Place Concrete). The base shall bear on a compacted crushed stone foundation consisting of twelve inches of NYSDOT Type 304 - 2.02 Type 2 subbase. The foundation mat shall be extended to geotextile lined undisturbed earth. Minimum diameter of the foundation mat shall be the diameter of the base plus two (2) feet. In general, the cast concrete base shall extend to a minimum height of 4 inches above the top of the highest pipe which connects to the manhole, as shown on the Contract Drawings. Ends of pipe shall be properly positioned and built into the formwork so that each pipe becomes completely encased in, and an integral part of, the cast base. A special key-ring shall be used where precast walls are to be installed. This is to insure that the base will be carefully formed to receive the end of the wall section.

B. Connections between existing sanitary sewer pipes and manholes/structures shall be made by casting the base around the existing pipe with a 1-inch by 2-inch block out. The block out material shall then be removed and replaced with an expanding joint sealer (activated oakum or compressed foam) and covered with non-shrink grout.

C. Minimum concrete Class "C" (per Part 2.07 of this Specification Section) shall be used for bench walls and all exposed surfaces shall receive a steel troweled finish. Horizontal surfaces of bench walls shall then be brush finished. Concrete shall be maintained free from ground water for at least four hours immediately following casting.

2.04 PRECAST CONCRETE RISERS AND MANHOLE TOPS

A. Precast Concrete Risers

1. Precast concrete risers shall be fabricated using straight, circular pipe sections.

2. The total height of precast riser required for each manhole shall be determined in the field.

3. The vertical distance between the top of the assembled precast units and the bottom of the installed cast iron manhole frame shall be a minimum of 4 inches and a maximum of 12 inches, to allow for masonry work or precast concrete grade rings.

4. Wall inserts necessary to attach the catch basin hood shall be cast into the wall.

B. Precast Reinforced Concrete Tops

1. Precast reinforced concrete tops for manholes shall be manufactured in accordance with ASTM Specification C-478, and sufficient to provide H-20 wheel loadings.

2. Openings shall be eccentric and the proper diameter to receive the frame specified.

C. Precast Catch Basins

Precast catch basins shall be furnished in one piece as indicated on the Contract Drawings. The catch basins shall be furnished with knock-out panels as necessary to accommodate the number of pipes to be connected to the unit.

D. All precast units shall be laid up plumb and level.

E. Minimum longitudinal and circumferential reinforcing steel shall be in conformance with ASTM Specification C-478. All units shall withstand H-20 surface wheel loadings.

F. Joints

1. Unless shown otherwise on the Contract Drawings, all tongue-and-groove (or male and female) joints in the precast wall, including the joint at the top of the base, shall be made up using a manufacturer supplied o-ring gasket.

2. All joints shall conform to ASTM Specification C-443; except that joint taper shall not exceed 3½ degrees.

3. The precast sections shall be provided with a special groove, cast into the male end, to receive and hold the gasket in position during joint assembly.

4. After joint assembly, the gap between sections shall be packed on the inside and outside with A-H Axpandcrete S Hi-Flow, by Anti-Hydro International; Masterflow 713 by Master Builders; or Five Star Grout by Five Star Products, Inc., and shall be troweled smooth so that no projections remain on the inside.

5. There shall be concrete to concrete bearing between the various sections, and the gasket shall not support the weight of the section.

6. Joints shall be as detailed on the Contract Drawings.

G. All precast concrete sections shall be free from cracks, damaged joints, exposed reinforcing, aggregate pockets, spalls, dimensional distortions, or other irregularities. Any rejected units shall be tagged and removed from the job site immediately.

2.05 Precast Concrete Stormwater Storage Tank

A. Tank shall be a typical precast concrete septic tank with reinforcement meeting ASTM A496-A615, Grade 60-80 KSI. Tank shall be provided without a baffle wall as shown on the Contract Drawings.

B. Precast sections shall be provided with a special groove to receive and hold the gasket in position during watertight joint assembly.

C. The volume of the tank shall be 5,000 gallons.

D. The load rating of the tank shall be H20.

E. The details on pipe and manhole openings shall be as shown on the Contract Drawings.

2.06 MASONRY WORK AND GRADE RINGS

A. The manhole frame shall be supported and adjusted to finished grade using solid, brick masonry as detailed on the Contract Drawings. Precast concrete grade rings may

be utilized, in lieu of brick, to support and adjust manhole frames. Grade rings shall conform to ASTM Specification C-478, and shall be carefully set in a full bed of mortar.

B. Materials shall conform to the following requirements:

Item	ASTM Specification	Remarks
Brick	C-62	Grade "SW"
Concrete Block	C-90	Grade "U-1"
Portland Cement	C-150	Type I or III
Sand	C-144	---
Lime	C-270	Type "N"
Water	___	Clear and free from all deleterious materials.
Mortar Mix	C-207	Type "M" (min. 2500 psi strength) 1 part cement 3 part hydrated lime 3 parts sand

C. Construction

1. Brick shall be wetted just prior to being laid.

2. Brick shall be full mortar bed, and mortar for the bed shall be spread to a uniform thickness (not furrowed).

3. All interior joints shall be filled solidly before laying the next course; and all vertical joints shall be shoved tight.

4. All brick is to be laid true to lines, with both sides plumb. Bed joints shall be 3/8-inch to 1/2-inch thick.

5. Mortar on inside and outside joints shall be struck off flush with wall surface and joints shall be so planned that courses will come level with and conform to the overall dimensions required.

6. The interior and exterior face of the brick shall be finished smooth with mortar.

D. Weather Conditions

1. No masonry work shall be done during heavy rains; or when the temperature is below 40°F; or when a satisfactory job cannot be accomplished.

2. The Contractor shall protect his work with coverings, plastic envelopes, etc., and shall maintain the air temperature within these coverings at a minimum of 45°F for a period of three days after the masonry has been laid.

2.07 BENCH WALLS

A. Flow Channels

1. The flow channels in each manhole/structure shall be carefully shaped following the details on the Contract Drawings.

2. Flow channels shall match the inverts and size of pipes which connect to the manhole/structure, creating a channel of gradual slope and curvature, assuring an uninterrupted flow through the manhole/structure.

3. The inverts of these channels shall be constructed of half sewer pipe sections or concrete.

4. Short sections of half sewer pipe may be cut and used to form the channel for bends.

5. The channel wall shall be extended to the top of the highest pipe entering the manhole/structure, forming the bench wall. Refer to Contract Drawings for details.

6. The bench surface itself shall extend to the manhole/structure walls, pitching slightly toward the flow channel.

B. Minimum concrete Class "C" shall be used for bench walls and all exposed surfaces shall receive a steel-troweled finish. Horizontal surfaces shall then be brush finished.

C. Class "C" concrete shall have the following characteristics.

1.	Comprehensive Strength at 28 Days (psi)	4,000
2.	Maximum Net Water to Cement Ratio by Weight	0.71
3.	Minimum Cement Per Yard of Concrete (lbs)	423
4.	Consistency Range in Slump (inches)	3-6

D. Class "C" concrete shall use Type II low alkali cement per ASTM C-150.

2.08 FRAMES AND COVERS

A. The Contractor shall furnish and install new manhole frames and covers on all new manholes/structures.

B. Frames and covers shall be as manufactured by Syracuse Castings Sales Corporation or approved equal.

C. Frames and covers shall conform to the following requirements:

1. Sanitary and storm manhole frames and covers for manholes/structures shall conform to Syracuse Castings Sales Corp., Pattern 1016A or approved equal with gasket.

D. Material

1. Shall be gray cast iron conforming to ASTM Specification A-48, Class 30B; or shall be ductile cast iron conforming to ASTM Specification A-536, Grade 65-45-12.

E. Castings

1. Shall be manufactured true to pattern and shall be of uniform quality, free from blowholes, porosity, hard spots, shrinkage distortion, or other defects. Components shall fit together in a satisfactory manner.

F. Frames and covers shall be heavy duty, non-penetrating pickhole type of non-rocking design, or shall have machined bearing surfaces to prevent rocking and rattling under traffic loads. Covers shall have cast in, 1½-inch wide, raised letters. Combined manholes shall have the words "COMBINED SEWER" cast in and storm manholes shall have the words "STORM SEWER" cast in the covers.

G. Finish

1. Shall be smooth and well-cleaned by shot-blasting or by other approved method.

2. All surfaces shall be clean and free from rust, scale, grease, oil or other impurities prior to application of one shop coat of asphalt paint.

H. Frames shall be firmly seated in full bed of mortar and be positioned to conform to the adjacent finished grade or to the specific elevation shown on the Contract Drawings.

I. Frames to be set parallel to surface slopes. Covers shall seat uniformly in any position in the frame without rocking.

2.09 STEPS

A. Steps shall be furnished for all manholes. Steps shall be copolymer polypropylene steel reinforced as manufactured by M.A. Industries, Inc. or approved equal conforming to ASTM D-4101, ASTM C-478, AASHTO M-199 and OSHA STD. 1-1.9. Steps shall be cast integrally with manholes or attached in other methods as approved by the Engineer.

B. All steps shall have a serrated non-slip surface of minimum 12-inch width and shall be placed as shown on the Contract Drawings. All steps shall be installed in vertical alignment spaced 12-inches on center, placed over the largest bench wall within the manhole/structure unless otherwise shown on the Contract Drawings.

2.10 WATERPROOFING

A. The Contractor shall furnish waterproofing over the entire exterior surface that will be below finished grade.

B. The waterproofing shall not mar or interfere with the specified exterior finish for these structures.

C. Waterproofing shall be accomplished prior to structure installation for precast sections and prior to backfill for those structures cast in place.

D. Waterproofing shall consist of a two-coat application of Xypex Concentrate as manufactured by Xypex Chemical Corp. or approved equal, and shall be applied according to manufacturer's instructions.

2.11 CATCH BASIN HOODS

A. Catch basin hoods shall be furnished for all stormwater manholes and catch basins. Catch basin hoods shall be Model #2563 as manufactured by Syracuse Casting Sales Corp., or approved equal.

B. Catch basin hoods shall be installed over the outlet pipe of all stormwater manholes and catch basins. Installation shall be in accordance with the manufacturer's instructions.

PART 3 EXECUTION

Not Used

END OF SECTION

SECTION 02515

WALKS AND CURBS

PART 1 GENERAL

1.01 SCOPE

A. This Section is subject to the applicable requirements of the Contract Documents.

B. The work includes all Walks and Curbs required by the Contract and, in general, includes the following items:

1. Concrete walks within the City of Syracuse right-of-way.

a) Filter fabric.
b) Subbase course: Granular material.
c) Surface course: Cast-in-place two lift concrete.

2. Granite curbing.

3. Hand excavation as required.

4. Pavement repair.

5. Testing as required.

6. Submittals.

C. Related work:

1. Asphalt concrete pavement: Refer to Section 02721, Paving and Surfacing.

1.02 QUALITY ASSURANCE

A. Concrete walk within the City of Syracuse right-of-way shall be in accordance with the current City Department of Public Works standards and specifications for materials, workmanship, installation and testing procedures.

B. Tolerances for granite curbs:

1. The top surface shall be sawn to provide true, even planes. Projections and depressions shall not be greater than 1/8".

2. Exposed arris lines shall be straight and true. Variations from a straight line shall not be greater than 1/8".

3. The curb front face shall be smooth and quarry split at a right angle to the top. Projections shall not be greater than 3/4" or depressions greater than 1/2".

1.03 SUBMITTALS

A. For concrete walks within the City of Syracuse right-of-way, submit all testing and information as typically required by the Department of Public Works.

1.04 PRODUCT HANDLING

A. Store materials properly to prevent damage, deterioration and contamination.

1. Aggregates shall be stockpiled in a well-drained location.

2. Packaged materials shall be delivered in their original unopened containers and stored in a weatherproof enclosure.

1.05 JOB CONDITIONS

A. Comply with all requirements of the City of Syracuse Department of Public Works standard specifications for installation of concrete walks within the public right-of-way.

B. Subbase course: Do not place or compact granular material when there is frost or an excess amount of water in the subgrade.

C. Coordinate with installation of the surrounding asphalt concrete pavement subbase course.

D. Concrete shall not be placed when the air temperature is below 40 degrees F except to complete a placement already begun, protection shall be provided as specified for cold weather protection. Reference Section 03370, Concrete Curing and Protection.

E. Traffic control: Maintain access for vehicular and pedestrian traffic as required for other construction activities.

1.06 APPLICABLE CODES, STANDARDS, AND SPECIFICATIONS

A. The work under this Section shall conform to the following, except as modified herein:

1. City of Syracuse Department of Public Works.

2. American Society for Testing and Materials (ASTM), Standard Specifications and Methods of Testing.

3. New York State Department of Transportation (NYSDOT), Standard Specifications.

4. American Concrete Institute, ACI 318, Building Code Requirements for Reinforced Concrete, and ACI 347, Recommended practice for Concrete Formwork.

5. Specifications for cold weather concreting: ACI Standard 306.

6. Specifications for hot weather concreting: ACI Standard 305

PART 2 PRODUCTS

2.01 MATERIALS FOR CONCRETE WALKS AND PADS

A. For concrete walks within the public right-of-way, refer to City of Syracuse Department of Public Works standard specifications.

B. Refer to Division 3 - Concrete specifications for materials, placement, and curing.

C. Forms for concrete walks and pads shall be steel. If wood forms are preferred by the contractor, use 3/4" or 5/8" plywood, Product Standard PS 1-83, Exterior BB Concrete Form, Class 1, APA grade trademarked, braced as required to provide straight sides and 90 degree corners.

D. Form release agent, Form Free of Anti-Hydro, Cast-Off of Sonneborn, Durogard of W.R. Meadows.

E. Expansion joint filler: Preformed, asphalt impregnated fiberboard conforming to ASTM D 1751.

F. Expansion joint filler cap: PVC Void Cap as manufactured by Greenstreak Plastic Products Co., St. Louis, MI 63117, or approved equal.

G. Expansion joint sealant: Synthetic rubber, two part polysulfide base compound conforming to Federal Specification TT-S-00227, Class A, Type II.

1. Sonolastic two-part sealant of Sonneborne, Synthacaulk GC-5 of Pecora Corp. or approved equal.

2. Polysulfide base compound shall comply with the Thiokol Chemical Corporation Building Trade Specification for two-component polysulfide base sealants or approved equal.

3. Sealant shall be guaranteed by the manufacturer to be non-staining when installed according to manufacturer's recommendations and instructions.

H. Curing and Protection: Follow requirements of Section 03370.

I. Surface treatment for concrete walks and pads shall be a Type E floor sealant per Section 03350, Concrete Finishes.

J. Granite curbs:

1. Granite shall be hard, durable and free from seams and other defects that impair its structural strength.

2. Curb shall be light gray granite, 5" thick and 16" high, having a split face and sawn top. The front face shall be at a right angle to the top plane, free from any drill holes and have no projections greater than 1" measured from the plane through the front arris, for a distance of 8" down from the top of the curb.

3. Curb sections shall have a minimum length of 4'-0" except for small radii.

4. All granite curbing to be installed in radii of less than 100' shall be radius curb sections cut to conform to the arc (radius) dimension indicated on the drawings.

K. Subbase course: Crushed stone.

1. Subbase course material: Crushed stone, NYSDOT 703-0201.

a) Sharp, angular fragments of crushed limestone or other approved crushed rock.

b) Uniform quality throughout, well graded, free from dirt, clay and debris.

c) Crushed gravel will not be acceptable as crushed stone.

d) Gradation shall conform to NYSDOT 304-2.02 Type 2 as follows:

Sieve Size Designation	Percentage Passing Weight
2 inch	100
1/4 inch	30-65
No. 40	5-40
No. 200	0-10

L. Mortar for granite curb joints: One (1) part Portland Cement Type II, ASTM C 150 and one (1) part mortar sand, ASTM C 144.

2.02 CONCRETE

A. Concrete for concrete walk: reference details on the Contract Drawings.

B. Concrete for granite curb supports:

1. Strength: 5000 psi at 28 days.
2. Amount: 1/2 cu. ft. per lineal foot of curb.
3. Slump: 2" to 4".

2.03 MORTAR FOR GRANITE CURBING

A. Mortar mix for masonry work: One (1) part Portland cement, one (1) part masonry cement and six (6) parts sand. All materials shall be proportioned by volume.

PART 3 EXECUTION

3.01 PREPARATION

A. Check the grades and subgrades for conformity with the Contract Drawings.

1. Proof-roll prepared subgrade, and conduct density tests to ascertain the need for additional compaction. Do not begin installation of concrete paving until such conditions have been corrected.

B. Do not begin installation of concrete pavement and curbing until subgrade conditions are as specified. Coordinate with installation of asphalt concrete pavement for subgrade and subbase preparation and compaction criteria.

C. Tolerances:

1. Walk and pad subgrade: Variations in excess of 1/2 inch from the grades established by the spot elevations and contours will not be acceptable.

2. Walk and pad subgrade profile: Deviation in excess of 3/8 inch when checked with a 10'-0" long straight edge will not be acceptable.

3. Surfaces shall be even.

4. The thickness of the subbase granular material and concrete course shall not be less than 1/4" from the thickness indicated.

D. Compaction equipment:

1. In all articles of this Section where compaction is indicated, coordinate with installation of asphalt concrete pavement for subgrade and subbase preparation. Use a 5-ton smooth wheeled roller for concrete walk subgrade and subbase compaction.

2. Where a roller will not fit, use a hand-operated vibratory compactor.

E. Before placing any concrete, check the reinforcing and accessories for position. Forms shall be properly oiled and free of debris and water.

F. All form materials shall be new when first used on the project and may be reused if the surfaces are undamaged and properly cleaned and oiled.

3.02 CONCRETE WALK AND PAD SUBGRADE

A. Compact the subgrade to form a smooth and even surface.

1. Compact the subgrade at optimum moisture content as determined by ASTM D 1557 to 95% density as determined by in-place field density tests ASTM D 1556.

2. A minimum of one (1) test will be required for each 500 square feet of walk and pad subgrade.

3. Ruts or soft, yielding spots in the subgrade, areas having inadequate compaction, and deviations of the surface from the requirements set forth herein shall be corrected by loosening and removing soft or unsatisfactory material and by adding approved material, reshaping to line and grade, and recompacting to specified density requirements.

4. Excess excavation shall be filled with fill material and compacted.

5. Unsatisfactory work shall be removed and replaced.

3.03 SUBBASE COURSE FOR CONCRETE WALKS AND PADS

A. Place the granular material on the compacted subgrade in layers. Each layer shall not exceed 4" in thickness.

B. Compact each layer until maximum compaction is obtained.

C. The material shall be so placed that, when compacted, it will be true to the grades or levels required with the least possible surface disturbance. The Contractor's procedures shall be designed to obtain true grades, to minimize segregation and degradation, to adjust the water content, and to insure an acceptable granular material course.

3.04 CONCRETE WALK AND PADS

A. Forms and dividing plates:

1. Construct the forms of sound material, preferably steel.

2. The depth of the forms shall not be less than the thickness of the concrete.

3. Set the top of the form at the finished surface of the concrete.

4. Provide radii as required.

5. Clean forms after each use and coat with form release agent as required to ensure separation from concrete without damage.

B. Expansion joints and control joints:

1. Install the expansion joints at intervals of not more than 30'-0", at the junctions with all structures and where shown.

2. The expansion joint filler shall extend to the full depth of the concrete.

3. Insert the filler cap in proper position according to the manufacturer's instructions.

4. Install backer rod and sealant as detailed.

5. Install control joints at intervals to produce squares in the sidewalk between expansion joints.

C. Placement and finish:

1. Place the concrete in one lift to the required thickness and to the elevations indicated. Convey, transport and place the concrete as rapidly as practical, without segregation or loss of ingredients and without unnecessary handling to produce a monolithic structure, free from pits, honeycombed areas and visible lines of juncture.

2. Vibrate concrete for slabs to a solid mass and screed.

3. Finish the surface with a float, steel trowel, and broom finish per Section 03350 to provide a dense, non-skid surface. The top surface is to be true, uniform and level or pitched as shown, without pockets, depressions, lumps, ridges or waves.

4. At control joints, score to a depth of ¼ of the thickness of the concrete. Round the edges with an edging tool.

5. Install the sealant in all of the expansion joints in accordance with the manufacturer's recommendations installation instructions.

6. Cure and protect the fresh concrete per Section 03370.

D. Surface treatment shall be Type E sealant per Section 03350 and be applied in two coats at a minimum of 28 days after the concrete is placed.

1. Application procedures, surface preparation, precautions and the rate of application shall comply with the manufacturer's instructions.

3.05 GRANITE CURBS

A. Set the curbs to the alignment, grade and reveal indicated.

B. Where the radius is 100'-0" or less, install radial curb sections.

C. Set the curb with mortar joints a maximum of 1/2" wide. The color of the mortar shall match the color of the granite as closely as possible.

3.06 FIELD QUALITY CONTROL

A. Test cylinders for concrete walks and pads:

1. Two test cylinders shall be made for each 400 square feet of concrete and pad or for each truckload of concrete, whichever provides the greatest number of tests.

B. The testing laboratory shall determine the locations and frequency of the test cylinders. Test cylinders will be taken in concrete walks and pads and/or each truckload of concrete.

C. Provide four test cylinders from each placement of concrete.

1. For each set of four cylinders, two (2) shall be broken at 7 days and two (2) at 28 days.

2. The making, curing, and evaluation of specimens shall be in conformance with Section 03300.

3.07 CONCRETE PROTECTION AND CURING

A. Protect the concrete from any injurious action of sun, rain, flowing water, frost mechanical injury and premature drying.

B. Cure all surfaces to prevent early loss of moisture in the mixture and to develop the full anticipated strength and durability of the concrete. Follow wet cure per Section 03370.

C. Cold weather protection shall be provided by the Contractor for any concrete placed during freezing weather. Follow Section 03370.

D. Hot weather protection shall be provided by the Contractor for concrete placed during hot, dry weather and shall be in conformance with ACI Standard 305.

E. All forms shall be left in place for a minimum of three days. This period is the cumulative number of days during which the temperature of the concrete is above 50 degrees F and is not necessarily consecutive.

3.08 PAVEMENT REPAIR

A. Repair all existing pavement damaged during construction of the concrete walk, pads and curbing.

B. Meet the existing subgrade and finished grade elevations.

C. Match the existing pavement in materials, course thicknesses and finishes to the satisfaction of the Engineer.

END OF SECTION

SECTION 02527

PRESTRESSED CONCRETE CYLINDER PIPE (PCCP)

PART 1 GENERAL

1.01 SUMMARY

A. This Section specifies the material and quality requirements for prestressed concrete cylinder pipe and specials for gravity sewer applications.

1.02 RELATED SECTIONS

A. Section 02530 Sewage and Drainage Piping Installation

1.03 REFERENCES

A. Material and installation shall be in accordance with the latest revision of the following codes, standards, and specifications, except where more stringent requirements have been specified herein.

1. American Society for Testing and Materials (ASTM)

2. American Water Works Association (AWWA)

3. American Association of State Highway and Transportation Officials (AASHTO)

1.04 SUBMITTALS

A. Submittals shall be submitted in accordance with the provisions set forth in the Special Project Conditions, General Provisions, and General Specifications.

B. Prior to obtaining any material in connection with this Section, submit detailed shop drawings of pipe, fittings, joints and accessories.

C. Other Submittals

1. Certified copies of tests and reports which are required within AWWA C-301 shall be provided by the pipe manufacturer.

2. Design calculations and sets of the tabulated layout schedule as outlined in AWWA Standard C-301. Design calculations shall be performed by a professional engineer licensed in the State of New York. Design calculations shall be performed for each pipe diameter, loading condition and bedding condition.

3. Layout drawings for entire project of pipe to be provided.

4. Concrete mix designs.

5. Samples and manufacturer's technical data for crack repair material.

6. Manufacturer's performance affidavit in accordance with the Special Project Conditions, General Provisions and General Specifications.

PART 2 PRODUCT

2.01 MATERIALS

A. The pipe and specials shall conform in all aspects to the requirements of AWWA Standard C-301 except as amended or modified herein.

B. Unless otherwise specified, joints shall be of the self-centering rubber and steel ring type with the rubber gasket fully enclosed on four sides. No concrete or mortar shall protrude beyond the edge of the spigot ring.

C. Joint rings shall be coated or metalized on all exposed surfaces with zinc or aluminum to a thickness of four (4) mils. The interior exposed surface of the steel joint rings that will be in contact with combined sewage shall be protected by eight (8) mils of coal tar epoxy.

D. Each special and length of pipe shall be clearly marked with the appropriate designation (strength classification and position in pipe line) on the outside or inside of the pipe with two (2) inch high letters approximately one (1) foot from each end of the pipe. Bevel pipe and elbows shall be marked to indicate the point of maximum length.

E. Cement used for manufacture of the concrete pipe shall conform to the standard specification for Portland Cement ASTM Designation C 150 Type II.

F. No lifting holes will be permitted in pipe.

G. Cracks and Crack Repair: Cracks and crack repair shall be in accordance with AWWA C301-99 except as amended herein.

1. Crack repair methods and materials shall be in accordance with AWWA C301-99 and manufacturer's requirements. The Contractor shall submit a copy of the AWWA crack repair procedures with the manufacturer's technical data for the crack repair material.

2. Cracks shall be repaired to the satisfaction of the Engineer. Pipes having cracks or defects which cannot be satisfactorily repaired shall be rejected and removed from the site and a replacement pipe shall be supplied at no additional cost to the Owner.

H. Closure pieces shall be provided and installed in accordance with the manufacturer's recommendations.

2.02 DESIGN

A. All pipe shall be designed for earth cover as shown on the Contract Drawings and AASHTO HS-20 truck live load in accordance with AWWA C304. Pipe shall be bedded as shown on the Contract Drawings.

B. Portions of the pipe will operate under surcharged conditions; therefore pipe shall be designed for surcharged flow conditions resulting from a water surface elevation of 379.0 feet.

2.03 SHOP TESTS

A. Shop tests on prestressed cylinder pipe shall be as follows:

1. Mill test of each batch of steel used in the manufacture of the cylinder and wrapping wire.

2. Compression tests on concrete cylinders made daily from the concrete used in the manufacture of the pipe.

3. Hydrostatic tests on each length of steel cylinder in accordance with AWWA C-301. This test will be required to demonstrate that finished product will be watertight. Complete written records on such testing shall be kept and submitted; reference pipe by serial numbers.

B. When required, the Contractor shall provide such additional tests as the Engineer may deem necessary to establish the quality of the pipe. Copies of test results shall be submitted to the Engineer upon request.

C. No defective pipe, or pipe in need of repairs, will be accepted for incorporation in the work. If, in the opinion of the Engineer, defective pipe can be satisfactorily repaired in the field, such repairs shall be performed by qualified personnel and in a proper manner at no additional cost to the Owner.

2.04 RESTRAINED JOINTS

A. All pipe joints to be restrained shall be restrained with harnessed clamps.

B. The harnessed clamp shall consist of two semicircular steel clamps which fit over steel flanges and have been factory welded to the steel bell and spigot sections. The semicircular clamps shall be drawn together by bolts at the springline on both sides of the pipe to form a flexible restrained joint.

C. The joint shall be encased in grout after the joint has been completed using special diapers supplied by the pipe manufacturer. The diapered and grouted joint shall be suitable for use in a high chloride content below-grade environment.

2.05 SERIAL NUMBERING

A. All pipe produced for this project shall be serially numbered with each pipe having its own number. These numbers shall be traceable to the day, month, and year of concrete placement, prestress wire wrapping, and mortar coating application. Numbers shall be approximately

three-eighths inch high digits, stamped into recessed portion of male joint ring. Painted numbers will not be acceptable. Evidence of tampering with number or date shall be cause for rejection.

2.06 OWNER'S INSPECTION OF PLANT

A. The Owner and its designated representative shall have the right to inspect all plants and facilities producing pipe for this project at any time. The pipe manufacturer shall provide its full cooperation and assistance for such inspections.

2.07 COATING

A. All pipe shall receive a coating of coal tar epoxy to protect the pipe from high chloride content below-grade environments.

B. All PCCP shall receive two coats of Hi-Build Tneme Tar® 46H-413 Polyamide Epoxy-Coal Tar as manufactured by Tnemec Company, Inc., or equal. Each coat shall have a dry film thickness of 8 to 12 mils. The total two coat dry film thickness of the coating system shall be 20 mils.

C. The coating shall be factory applied after the pipe has cured in accordance with manufacturer's recommendations.

PART 3 EXECUTION

3.01 INSTALLATION

A. The pipe material shall be installed in accordance with the manufacturer's installation instructions and the applicable provisions of Section 02530 Sewage and Drainage Piping Installation.

B. Each push-on joint shall be liberally lubricated with an approved type of vegetable oil soap. Before the joint is fully made, the position of the gasket in the joint shall be determined by means of a suitable feeler gauge supplied by the pipe manufacturer. If the gasket is found not to be in proper position, the pipes shall be separated and the damaged gasket replaced. In its final position, the joint between the pipes shall be within the specified limits of the pipe supplier.

C. A diaper shall be strapped to the outside of the completed joint so that it encompasses the external joint recess. A grout consisting of one part cement, three parts sand and sufficient water shall be mixed to produce an adequate grout free of lumps. The grout shall be poured into the opening at the top of the diaper so that it completely fills the external joint recess. The grout should be rodded or puddled to ensure complete filling of the joint recess. A stiffer mix can be used to trowel over the opening at the top of the diaper.

D. The interior surface of the steel joint rings shall be protected by mortaring the interior joint recess using a stiff 1:3 portland cement/sand mortar.

E. The Contractor shall provide other adapters, closure pieces and specials needed to connect prestressed concrete cylinder pipe to other types of pipe, or to structures, valves and fittings, as shown or specified. In addition, the Contractor shall provide a sufficient number of random length shorts of the maximum strength of each size so that adjustments can be made to meet lateral connections. All such pipe and adapters not incorporated in the work, shall be removed at the end of the work at the Contractor's expense.

3.02 FIELD TESTS AND INSPECTIONS

A. All testing for PCCP used in sewage and drainage applications shall be in accordance with Section 02530 Sewage and Drainage Piping Installation.

3.03 SERVICES OF MANUFACTURER'S REPRESENTATIVE

A. The Contractor shall provide for the services of a competent representative of the PCCP manufacturer to provide the following services:

1. Prior to delivery of pipe - a minimum of two (2) hours of on-site instruction in the proper storage, handling, transport, installation, and testing of the PCCP to be installed under this Contract, for the Contractor's pipe installation personnel and representatives of the Owner.

2. During pipe installation - the representative of the PCCP manufacturer shall observe, instruct, and oversee installation of the first four (4) pieces of PCCP installed under this Contract, and certify to the Owner, in writing, that the Contractor's personnel have followed all appropriate procedures, means, and methods during installation of these pieces.

END OF SECTION

SECTION 02530

SEWAGE AND DRAINAGE PIPING INSTALLATION

PART 1 GENERAL

1.01 SUMMARY

A. This Section includes installing underground sewage and drainage piping (including CSO transmission pipelines) in compliance with this Section of the specifications.

B. Piping shall be furnished and installed of the materials, sizes and classes designated on the Contract Drawings and as specified in the section for the specific pipe material, or as otherwise specified and at the grades and locations shown on the Contract Drawings.

1.02 RELATED SECTIONS

A. Section 02140 Dewatering
B. Section 02170 Temporary Excavation Support
C. Section 02190 Maintenance of Sewer Flows
D. Section 02230 Selected Fill
E. Section 02270 Geotextile Fabric
F. Section 02300 Earthwork
G. Section 02514 Precast Concrete Manholes, Catch Basins, and Structures
H. Section 02527 Prestressed Concrete Cylinder Pipe (PCCP)
I. Section 02620 Polyvinyl Chloride (PVC) Non-Pressure Pipe
J. Section 02621 Fiberglass Reinforced Polymer (FRP) Pipe
K. Section 02622 Large Diameter High Density Polyethylene (HDPE) Pipe
L. Section 03300 Cast-in-Place Concrete

1.03 REFERENCES

A. Material and installation shall be in accordance with the latest revisions of the following codes, standards, and specifications, except where more stringent requirements are specified herein.

1. American Society for Testing and Materials (ASTM)
2. American National Standards Institute (ANSI)
3. New York State Department of Transportation (NYSDOT)

1.04 SUBMITTALS

A. Submittals shall be in accordance with the provisions set forth in the Special Project Conditions, General Provisions, and General Specifications.

B. Detailed shop drawings of the fittings used for service connections and sewer laterals shall be submitted.

PART 2 PRODUCTS

2.01 MATERIALS

A. All piping materials shall be in accordance with the appropriate specification section of the Contract Documents.

2.02 METALLIC LOCATOR TAPE

A. Locator tape, intended to allow for future locating of buried non-metallic sewers, shall be required for all buried non-metallic sewers. Tape shall be of metallic material with a corrosion resistant coating, and be a minimum ¼-inch wide. The tape shall be installed along the full length of the sewer in accordance with manufacturer's instructions.

PART 3 EXECUTION

3.01 PROTECTION OF EXISTING FACILITIES

A. The Contractor shall conduct his operations such that no interruptions to the existing sewer system shall occur. Where existing sanitary sewer, combined sewer or storm sewer systems are being replaced or interrupted, the Contractor shall provide temporary bypass systems in accordance with Section 02190.

B. Existing sanitary sewer laterals damaged in the work or temporarily disconnected shall be restored to operation by the end of each work day. Existing sanitary sewer laterals crossing over new pipelines shall be restored in accordance with details shown on the Contract Drawings.

C. The Contractor shall maintain existing manholes, catch basins and other structures in their pre-construction condition unless shown otherwise on the Contract Drawings. Any material or debris entering same due to the Contractor's operation shall be promptly removed at no cost to the Owner.

D. Staking

1. Prior to start of construction, the Contractor shall have staked or marked all underground utilities. Utilities include, but are not limited to, water, gas, electrical, telephone, cable, sanitary sewers, combined sewers, storm sewers, laterals, and services.

2. In the event such locations indicate a possible interference, or when needed to locate points of connection to existing facilities, the Contractor shall perform exploratory excavations to determine the utilities' locations and elevations. The Contractor shall provide the Engineer with the results of the exploratory excavations.

3. The Contractor shall allow the Engineer sufficient time to determine any changes required as a result of such exploratory excavations prior to start of construction. Refer also to the Special Project Conditions and Section 02300, Earthwork, for additional details regarding existing facilities.

E. When the project consists of reconstructing sanitary sewers and combined sewers and reconnection of existing sanitary laterals, the Contractor shall only reconnect live laterals, unless otherwise shown on the Contract Drawings or ordered by the Engineer. The Contractor shall verify whether the lateral is live or abandoned and the source of the lateral using such methods as necessary including dyeing, flushing with water, rodding, pipe locators and exploratory excavations.

3.02 LINES AND GRADES

A. Pipes shall be laid to the lines and grades shown on the Contract Drawings and shall be straight between manholes, except where specifically shown otherwise on the Contract Drawings.

B. The grade of the sewer between manholes and from pipe length to pipe length shall not vary from the design grade shown on the Contract Drawings by more than 0.15 times the design grade, unless a change in grade has been ordered by the Engineer in which case the same tolerance shall apply. In addition, invert elevations at any location shall not vary from the design elevations by more than 0.05 feet, unless a change in invert elevation has been ordered by the Engineer in which case the same tolerance shall apply.

C. Any sewer grade or invert elevation which exceeds these tolerances shall be corrected by the Contractor at his own expense.

D. The method used to install the sewer shall be consistent with standard surveying practice for establishing line and grade and sufficiently accurate to insure that the above requirements are met.

E. Where replacing short sections of existing sewer of length less than the distance from manhole to manhole, the Contractor shall verify by exploratory excavation the existing location and grade at each end of the section to be replaced and employ standard surveying methods, to install the new sewer true to line and grade within the prescribed tolerances. The final alignment of the sewer shall be such that a clear and unobstructed line of sight exists between manholes.

F. For manhole-to-manhole reaches, the Contractor shall use the laser beam method to establish line and grade, and the Contractor shall check the grade of pipe at not more than 50-foot intervals using standard surveying methods.

G. The Contractor shall furnish all labor, materials, surveying instruments and tools to establish and maintain all lines and grades. The Contractor shall have personnel on duty at all times who are qualified to set and check grades of sewers and manholes as they are installed. The responsibilities of the Engineer to provide, and the Contractor to maintain, basic control points for line and grade are outlined elsewhere in these Contract Documents.

H. The Contractor shall employ a land surveyor licensed in the State of New York to verify final rim, invert and weir elevations at structures of all piping installed on

this project and the length between structures. This information shall be recorded on the record drawings to be delivered to the Engineer.

I. Location of required elevations to be of the pipe invert at a point where the pipe enters or exits a structure.

3.03 TRENCH EXCAVATION

A. Trenches for underground drainage and sewer piping shall be excavated and maintained as shown on the Contract Drawings and specified in Section 02300, Earthwork and Section 02170, Temporary Excavation Support.

B. Trench widths shall be held within the limits shown on the Contract Drawings.

C. If the Contractor utilizes a conventional trench box for temporary excavation support, the bottom of the shield shall be maintained as high as possible (preferably at or above the top of the pipe) so as to prevent disturbance of the pipe foundation material and to avoid forces which would tend to pull pipe joints apart when the shield is dragged forward. Gouged openings or troughs left by the conventional trench box shall be filled with additional pipe foundation material and thoroughly compacted. Use of conventional trench boxes shall be in accordance with Section 02170, Temporary Excavation Support.

3.04 PIPE FOUNDATIONS

A. All pipes, fittings or specials which are to be installed in the open trench excavation shall be properly bedded in, and uniformly supported on, pipe foundations of the various types specified herein and shown on the Contract Drawings.

B. Trenches shall be excavated to the necessary depth and maintained in accordance with Section 02300 Earthwork and Section 02170 Temporary Excavation Support prior to installing the foundation.

C. Trenches shall be dewatered in accordance with Section 02140 Dewatering and all work shall be performed in a dry trench.

D. Bedding material shall be spread in a maximum of 8-inch layers to the midpoint of the pipe and each layer shall be compacted until the required total depth of bedding has been built up. If controlled low strength material is used for bedding it shall be placed in accordance with the pipe manufacturer's recommendations to prevent pipe floatation and to resist pipe collapse.

E. Compaction methods include hand tamping with T-bars, flat heads, shovel slicing, as well as mechanical compactors.

F. The Contractor shall perform his bedding operations with care to maintain line and grade.

G. The pipe foundation above the midpoint of the pipe shall be spread and compacted in 12-inch layers to 12 inches above the top of the pipe for PVC, FRP, and HDPE. The Contractor shall not compact directly over PVC, FRP, and HDPE pipe until the depth of backfill has reached 2 feet above the top of the pipe.

1. Type I - Stable Soil Conditions

   a. Pipe located in stable soil conditions shall be supported on a Type I foundation as indicated on the Contract Documents or when ordered by the Engineer.

   b. The trench shall be excavated to a depth as shown on the Contract Drawings.

   c. Material per Section 02230, Selected Fill, shall be furnished, placed and compacted as shown on the Contract Drawings.

   d. Suitable holes or depressions shall be provided in the trench bottom to permit adequate bedding of bells, couplings, or similar projections.

   e. The selected fill stone shall extend upward as shown on the Contract Drawings.

   f. As required on the Contract Drawings, geotextile filter fabric material shall be utilized in Type I foundations and shall be installed in accordance with manufacturer's

instructions. Geotextile filter fabric shall be as per Section 02270 Geotextile Fabric.

2. Type II - Unstable Soil Conditions

   a. Pipe located in unstable soil conditions shall be supported on a Type II foundation as indicated on the Contract Drawings or when ordered by the Engineer.

   b. The trench shall be excavated to the depth required below the bottom of the pipe as determined by the Engineer.

   c. Material shall then be furnished and placed in the trench for its full width as shown on the Contract Drawings. All material shall be spread in layers and each layer shall be compacted until their respective total depths have been built up as required.

   d. Bedding materials shall then be installed in accordance with Type I Pipe Foundation requirements as shown on the Contract Drawings.

3. Type III - Concrete Encasement

   a. When specifically called for on the Contract Drawings, or when ordered by the Engineer, the pipe shall be supported on a Type III foundation.

   b. The trench shall be excavated to a depth as shown on the Contract Drawings.

   c. The excavated space shall then be completely filled with, and the entire pipe encased in, concrete. The total minimum width of the concrete encasement shall be constant for the entire length of the encasement. The concrete strength shall be as shown on the Contract Drawings and the top surface of the encasement shall be screeded flat.

   d. Concrete mix, formwork, curing, etc., shall be in accordance with the requirements of Section 03300, Cast-in-Place Concrete. Freshly placed

concrete shall be maintained free from ground water and no backfilling of the trench shall begin until initial set has taken place, but not less than 48 hours has lapsed after the encasement has been cast. Backfill a depth of 12 inches over top of concrete before beginning compaction with mechanical equipment.

e. Concrete shall be placed in accordance with the pipe manufacturer's recommendations to prevent pipe floatation and resist pipe collapse.

f. If removal of the temporary excavation support system is allowed at the location of concrete encasement, the temporary excavation support shall not be removed until the full strength of the concrete is achieved, as demonstrated by test cylinders.

3.05 INSPECTION OF PIPE BEFORE INSTALLATION

A. All pipe, fittings and specials shall be carefully inspected in the field before lowering into the trench.

B. Cracked, broken, warped, out-of-round, damaged joints, or otherwise defective pipe, fittings or specials, as determined by the Engineer, shall not be installed. Any pipe or fitting which has received a blow that may have caused an incipient fracture, even though no such fracture can be seen, shall be marked as rejected and removed from the site. Any pipe or fitting which appears to be sunlight affected shall be marked as rejected and removed from the site.

C. Rejected pipe and fittings shall be clearly tagged in such a manner as not to deface or damage them, and then shall be removed from the job site by the Contractor at his own expense.

D. Care shall be taken in shipping, handling, and laying to avoid damaging the pipe and fittings. Extra care will be necessary during cold weather construction.

E. The pipe shall be cut in a neat and workmanlike manner without damage to the pipe per the manufacturer's recommendations. All pipe ends shall be cut square at

right angles to the axis of the pipe, deburred and beveled. The chamfer shall be in accordance with manufacturer's recommendations.

F. Pipe shall be handled and stored in accordance with manufacturers' requirements.

3.06 INSTALLATION OF PIPE

A. Installation of piping shall be in accordance with manufacturer's technical data and printed instructions.

B. All pipe, fittings and specials shall be carefully lowered into the trench with ropes, slings or other equipment designed or intended for the task.

C. Pipe which becomes cracked, broken or otherwise damaged during or after installation shall be marked and removed from the job site by the Contractor at his own expense.

D. The cutting of pipe, if required to make connections to new or existing work, shall be done with proper tools in accordance with the pipe manufacturer's requirements.

E. Ends of pipe which terminate at manholes, catch basins or other structures shall be cut cleanly and trimmed to a neat, sheared edge which comes flush with the inside wall of the structure unless shown otherwise on the Contract Drawings.

F. The pipe, fittings and specials shall be installed to the required line and grade, and shall be firmly bedded in the trench so that the pipe barrel is uniformly supported and cradled throughout its length, consistent with the requirements of the pipe foundation used.

G. Intermediate support (i.e., blocking, concrete mud mat, pipe slings, etc.) may be required to install the pipe to the lines and grades required.

H. Holes and depressions in the pipe foundation shall be provided to receive bells, couplings, or similar projections to assure proper bedding of the pipe barrel.

I. When the pipe is in proper position, it shall be joined or coupled to the mating end of the previously laid pipe using the manufacturer's required assembly procedure.

J. The completed assembly of pipe sections shall form a sewer with uniform slope unless indicated otherwise on the Contract Drawings.

K. Manufactured pipe plugs or temporary bulkheads shall be placed in the open ends of small diameter (36-inches or less) sewer lines whenever pipe laying is stopped overnight, over weekends, or whenever dirt or debris could enter the pipeline during construction. Larger diameters shall be inspected for debris and kept clean.

3.07 CONNECTIONS TO EXISTING PIPE

A. Unless shown otherwise on the Contract Drawings, all connections between existing and new sewer pipe installed under this Contract shall be made using flexible rubber couplings, as manufactured by Fernco, Inc. or equal, with stainless steel clamps specially sized for the pipes involved.

3.08 CONNECTION TO EXISTING STRUCTURES

A. Unless shown otherwise on the Contract Drawings where sewers are to be connected to existing manholes, catch basins, or other structures, and where no stub or opening has been provided for the connection, the Contractor shall cut an opening of minimum diameter through the side wall of the structure for inserting the pipe, at the required location. After inserting the pipe, the annular space remaining outside the pipe shall be completely filled with an expanding joint sealer (activated oakum or compressed foam) and covered with non-shrinking watertight mortar and such joint made watertight so that leakage of water into the structure is prevented.

B. Unless shown otherwise on the Contract Drawings, the pipe shall be positioned so that the finished or trimmed end of the pipe is flush with the inside wall surface of the structure.

C. The mortar shall be struck off neatly to form a smooth, dense surface flush with the inside wall surface of the structure.

D. For flexible pipe (PVC, FRP and HDPE), unless shown otherwise on the Contract Drawings, furnish and install a rubber gasket or waterstop ring around exterior of pipe or provide manhole adaptor to make a watertight manhole

connection as manufactured by Fernco, Inc., or approved equal.

E. Benchwalls in existing structures shall be altered to form a new trough so that the new connection will enter the existing flow channel at no less than a 45° angle in the direction of flow, or as shown on the Contract Drawings.

F. Benchwalls shall be extended upwards to the top of pipes or as shown on the Contract Drawings.

G. In making connections to existing manholes or structures, care shall be taken to avoid damage to the existing manhole or structure or allowing debris to enter the pipelines.

H. Any damage resulting from the Contractor's operations shall be repaired by the Contractor at his own expense.

3.09 SERVICE CONNECTIONS, SEWER LATERALS AND CLEANOUTS

A. Where shown on the Contract Drawings, and as specified in Item 3.14 of this specification section (Sanitary Sewer Building Laterals to be Removed and Replaced), service connections, sewer laterals and cleanouts shall be furnished and installed to the extent shown and/or ordered by the Engineer.

B. It is the responsibility of the Contractor to verify locations, material, type and size of all sewer laterals and cleanouts during construction.

C. Wye, tee or wye-tee branch fittings shall be installed in the run of the main sewer at the required locations. Saddles may be permitted in lieu of wye, tee or wye-tee fittings with prior approval from the Engineer. Saddles shall be of cast iron/stainless steel construction, as manufactured by the General Engineering Co., or equal. Such fittings shall be located at the required locations and installed as specified, and in a manner satisfactory to the Engineer.

D. Branch fittings shall be positioned so that the stem falls above the horizontal diameter of the main sewer pipe. The requirements for proper pipe foundation, bedding, joint assembly, etc., shall be observed when installing the fittings in the run of the main sewer.

E. A sanitary sewer cleanout with offset sewer vent shall be installed as shown on the Contract Drawings and/or as needed to properly connect the new lateral to the existing lateral during construction. Cleanouts and vents shall be installed using cast iron soil pipe and fittings, sized to match the new lateral installed. The cleanout pipe and fittings shall be centrifugally cast in one piece in accordance with ASTM A74.

F. After installation, branches shall not be backfilled until their location has been measured and recorded by the Contractor on the daily construction record drawings.

G. Unless otherwise shown on the Contract Drawings, sewer lateral pipe shall conform to the following:

1. Pipe shall be installed on Type I pipe foundation.

2. Pipe shall be laid at a uniform slope of not less than 1/8-inch per foot.

3. Pipe shall be laid in straight alignment to the property line or other point of termination.

H. Each installed sewer lateral shall not be backfilled until the installation has been inspected by the Engineer.

I. Following inspection by the Engineer, the installed service connection and portion of the sewer lateral adjacent thereto shall be encased with controlled low strength material in accordance with the Contract Drawings.

J. The controlled low strength material shall be installed and carried down to undisturbed earth, and shall be carefully compacted.

K. Prior to backfilling, the Contractor shall determine the depth and elevation of the invert of the end of the pipe, and also the location thereof by means of suitable tie (minimum 2 ties per location) measurements to existing buildings and/or features, which are permanent in nature.

L. This information and other pertinent data will be recorded on the daily construction record drawings by the Contractor.

M. All connections for each new sewer lateral between the existing lateral and the new service connection shall be made with flexible type couplings, adaptors, or donuts as manufactured by Fernco, or approved equal. Straps and bolts shall be stainless steel.

3.10 VISUAL INSPECTION OF NEW SEWERS

A. Each section of installed sewer between manholes, catch basins or structures shall be visually inspected by the Contractor and Engineer before final acceptance.

B. Such inspection shall be continuous color video, recorded and logged over the pipe interior's entire length. Groundwater determinations shall be made at the same time and submitted to the Engineer. The Contractor shall engage the services of an approved professional independent sewer inspection service which specializes and is experienced in color videotape methods. The videotaped sewer inspection shall be conducted at least thirty (30) days after final backfill has been placed, groundwater dewatering operations have ceased and temporary excavation support systems have been removed (if applicable). Pipes shall be videotaped in the direction of flows. The color videotape record shall be made in the presence of the Engineer and submitted to the Engineer directly by the sewer inspection service. The color videotape record shall be properly identified, narrated as necessary and accompanied by a written record of each videotaped run.

C. The pipe and fittings shall be true to both line and grade, shall show no leaks, shall show no obstruction to flow, shall have no projections of connecting pipe into the line, shall be free from cracks and protruding joint materials, and shall contain no deposits of dirt, debris or other material which will in any way reduce the full cross sectional area of the pipe. Refer to Item 3.02 (lines and grades) of this specification section for allowable tolerances.

D. Any section of sewer, or portions thereof, which does not comply with the inspection criteria defined above, as determined by the Engineer, shall be promptly corrected or repaired by the Contractor at his own expense. The extent and type of repair, as well as results, shall be subject to the approval of the Engineer.

E. Pipe which is cracked, collapsed or showing other signs of damage such as bulging or dimpling shall be dug up and replaced with new pipe; pipe which is out of line or grade shall be dug up and re-laid to the correct line and grade.

F. Connecting pipes which protrude into the line shall be dug up and the connection remade, or the protruding portion of the connecting pipe shall be trimmed back flush with the wall of the main sewer, if the main line can be entered.

G. Deposits of dirt and debris shall be flushed with water through to the downstream manhole and removed.

H. At points of leakage, the pipe shall be dug up and replaced or repaired with approved repair clamp couplings so as to permanently stop the leak.

I. All manholes shall be watertight. All joints (including those between cast iron frame and brick, and those between brick units themselves) and wall sections shall be neat, continuous, and flush with the adjacent surfaces. Dirt and debris shall be removed from all manholes.

3.11 DEFLECTION TESTING OF NEW SEWER PIPE

A. Deflection testing shall be performed on all flexible pipes (HDPE, FRP, PVC) before final acceptance. Pipe deflection is defined as the percent reduction in vertical diameter of installed pipe diameter when compared to the nominal pipe diameter.

B. Initial deflection testing shall be performed on all flexible pipes 42-inches in diameter and greater after backfill reaches 12-inches above the crown of the pipe. Final deflection testing shall be performed on all flexible pipes at least thirty (30) days after final backfill has been placed, groundwater dewatering operations have ceased and temporary excavation support systems have been removed (if applicable). Final deflection testing shall be performed prior to final paving and/or final restoration.

C. All tests shall be witnessed by the Engineer. The results of all deflection testing shall be submitted to the Engineer.

D. The pipe shall be visually inspected prior to deflection testing.

E. Tolerances

1. Initial deflection testing: Unless more stringent tolerances are required by the pipe manufacturer, the measured initial deflection of the pipe shall be no less than -2.0% and no greater than 2.0%.

2. Final deflection testing: Unless more stringent tolerances are required by the pipe manufacturer, the measured final deflection of the pipe shall be as follows:

   HDPE: no less than -2.0% and no greater than 7.5%

   FRP and PVC: no less than -2.0% and no greater than 5.0%.

3. Any section of pipe found to have a deflection in excess of allowable tolerances shall be corrected by the Contractor by uncovering the pipe section and re-installing it with properly compacted backfill material.

4. Unless more stringent tolerances are required by the pipe manufacturer, any pipe section exhibiting deflections equal to or greater than 8.0% shall be removed from the project site and not reinstalled or incorporated in any work of this project.

F. The Contractor shall use one of the following methods or a combination of the following methods to perform the required deflection testing:

1. Deflection Gauge

   a. Pipe may be tested by passing a deflection gauge ("Go-No Go" mandrel type or approved equivalent) through all completed pipe.

   b. The deflection gauge shall be rigid and non-adjustable with an odd number of runners or legs with 9 legs minimum, and the barrel section of the deflection gauge shall have a height of at least 75% of the nominal diameter of the pipe being tested.

c. The deflection gauge shall be fabricated from metal or rigid plastic that can withstand 200 psi without being deformed.

d. The deflection gauge shall be fitted with pulling rings on both ends and stamped or engraved on some segment indicating the pipe material and nominal diameter the deflection gauge is to be used for.

e. Deflection gauge shall be pulled through the pipe by hand to ensure that maximum allowable deflections have not been exceeded. The use of mechanical pulling devices will not be permitted. If the mandrel fails to pass, the pipe will be determined to be over-deflected.

f. Prior to use, each deflection gauge shall be certified by an Engineer licensed in the State New York. Use of an uncertified deflection gauge or a deflection gauge that has been altered after certification will invalidate the test.

2. Telescopic Survey Leveling Rod

a. Where safe human entry is possible, the Contractor may test pipe by measuring the vertical diameter of the inside diameter of the pipe by means of a telescopic survey leveling rod at 10-foot intervals, minimum, or as directed by the Engineer.

b. Telescopic survey leveling rods shall have sections which smoothly extend from a sturdy base and are tightly fitted to minimize swaying when extended. Scale gradations shall be clearly marked at 0.10 foot intervals. Telescopic survey leveling rods shall be Crain Surveyors Series SVR-90343, or equal, with a mounted rod level, Crain SVR-91255, or equal.

3. Laser Scanning

a. Pipe may be tested by using laser scanning equipment mounted on a sensor transport vehicle.

b. The sensor transport vehicle shall be skid steered with molded rubber tracks and provide a stable platform for all sensor and cameras onboard. The transport shall have a minimum four horsepower motor with the ability to pull one mile of cable from a single location. The sensor transport vehicle shall be capable of operating within the pipe being tested and have auxiliary motion axes that enable the operator to reposition the vehicle in the event that it is flipped or positioned on its side.

c. The sensor transport vehicle shall be capable of being deployed through an access hole with a minimum of 24-inch clear opening.

d. The sensor transport vehicle shall be capable of variable speeds from 0 to 30 feet per minute.

e. The sensor transport vehicle shall have an onboard integrated inertial measurement unit (IMU) to enable real-time monitoring of vehicle position and orientation. The IMU shall measure three axes of rotation and three axes of acceleration. The IMU shall provide real-time measurement and display at the operator's station of pitch and roll measurements with respect to gravity that are accurate to ±1°.

f. The sensor transport vehicle shall be equipped with a minimum of 5,000 linear feet of tag line with a minimum strength of 5,000 lb.

g. Laser scanning equipment shall be mounted on the sensor transport vehicle and be capable of measuring the distances to objects and surfaces in pipes. The laser scanning equipment shall be capable of imaging the pipes being tested. The laser shall support 75 Hz scan rates or higher and be Class 1, eye-safe for operator safety. The laser scanning equipment shall be capable of being repeatable, actuated to provide data that eliminates six degree-of-freedom sensor alignment problems. The reporting accuracy shall be 1 cm at 3 meters.

h. Overlapping high resolution dwell scans shall be taken with the laser scanning equipment at 10-foot intervals or as necessary to produce a high resolution three dimensional dwell scan that can be converted to AutoCAD files. Laser data shall be electronically synchronized with all other data sensors on the sensor transport vehicle, if applicable.

3.12 LEAKAGE TESTS OF NEW SEWERS, MANHOLES, AND STRUCTURES

A. All combined sewers and sanitary sewers, including manholes and other structures constructed under this Contract, shall be tested for leakage and shall satisfactorily meet the test requirements prior to final acceptance of the work. Cast-in-place manholes and structures shall be leakage tested in accordance with Section 03301, Tightness Testing of Fluid Containment Concrete Structures.

B. The Contractor shall furnish all required labor, materials, and equipment and shall perform the tests described herein. All water necessary for flushing and testing shall be furnished and disposed of in accordance with the General Specifications, General Provisions, and Special Project Conditions.

C. A series of consecutive sections of sewer may be tested simultaneously except that the maximum length tested at any one time shall not exceed 1,000 feet. A section of sewer is defined as the length of sewer between two consecutive manholes or structures.

D. Leakage testing shall be performed prior to final paving and/or final restoration. Leakage testing shall be performed at least thirty (30) days after final backfill has been placed, groundwater dewatering operations have ceased and temporary excavation support systems have been removed (if applicable).

E. All tests shall be witnessed by the Engineer. The results of all leakage testing shall be submitted to the Engineer.

F. The pipe shall be visually inspected prior to leakage testing.

G. Any section of pipe found to have leakage in excess of allowable tolerances shall be corrected by the Contractor. The pipe section shall be repaired using a method approved by the pipe manufacturer and Engineer and the section shall be retested.

H. The Contractor shall be responsible for determining the average ground water levels in the area of the test sections and providing the levels to the Engineer prior to commencement of leakage testing.

I. The Contractor shall use one of the following methods or a combination of the following methods to perform the required leakage testing on sewer pipe. All methods used by the Contractor shall be in accordance with manufacturers' recommendations.

1. Low Pressure Air Testing of Sewer Pipe

a. PCCP, FRP and PVC pipe may be tested though the use of low pressure air tests. Unless manufacturer's recommendations state otherwise, low pressure air testing shall not be used for testing HDPE pipe.

b. Low pressure air testing shall be accomplished over a length of pipe using mechanical or pneumatic plugs or on a joint-by-joint basis using a joint tester.

c. All plugs and joint testers shall be designed to resist internal testing pressures without the aid of external bracing or blocking. The Contractor may internally restrain and/or externally brace the plugs or joint testers as an additional safety measure. If pneumatic plugs are used, a separate hose shall be required to inflate the plug from the above ground control panel.

d. All pressurizing equipment used during the low pressure air test shall include a regulator or relief valve. Additionally, the pressure in the test section shall be continuously monitored to ensure that it does not exceed safe levels at any time.

e. The test section shall be pressurized to at least 4.0 psig greater than the average back pressure of groundwater, if applicable, but no greater than 9.0 psig. Once the pressure within the pipe has stabilized to at least 4.0 psig (greater than groundwater) for 5 minutes, the test may begin.

f. Tolerances

i. The test section shall show no more than a 0.5 psig drop in pressure over the specified time period. The specified time period shall be determined using the following equation:

$$T = 0.0425*(DK)/Q$$

Where:
T = specified time, seconds
K = 0.000419*D*L, but not less than 1.0
D = nominal pipe diameter, inches
L = length of test section, feet
Q = 0.0015

ii. Regardless of the specified time period, if there is zero leakage after one hour of testing, the test may be terminated and the pipe section shall be determined to have passed the leakage test.

g. Testing requirements specific to PCCP pipe:

i. In addition to the applicable low pressure air testing methods stated above, the Contractor may test pipe joints for PCCP by using double gasketed, factory installed, air testable joints.

ii. Each air testable joint shall be pressurized to 50 psi in accordance with manufacturer's instructions and held for 5 minutes, minimum.

iii. The pressure loss in the air testable joint shall not exceed 5 psi over the 5 minute test period. Joints in which

pressure loss exceeds this limit shall be corrected prior to retesting.

iv. Following approved leakage testing, any recesses for the testable joints shall be filled with mortar in accordance with manufacturer's instructions.

2. Exfiltration Testing of Sewer Pipe

a. Exfiltration shall be measured by the drop of water level in the upstream manhole or structure of the section being tested.

b. The sewer sections being tested shall be filled with clean water to provide a head of at least 4 feet above the top of the sewer pipe or 4 feet above the level of the ground water table, whichever is higher, at the highest point of the pipe section being tested. The loss of water from the test section shall be measured to be equal to the amount of water which must be added during the test to maintain the original water level in the manholes.

c. The test section shall remain filled with water for an equalization period of at least 24 hours prior to beginning the test. The test period shall be at least two hours.

d. The Contractor shall provide a positive method of releasing entrapped air in the sewer prior to taking measurements.

e. Mechanical or pneumatic plugs shall be used to isolate test sections. All plugs shall be designed to resist internal testing pressures without the aid of external bracing or blocking. The Contractor may internally restrain and/or externally brace the plugs as an additional safety measure. If pneumatic plugs are used, a separate hose shall be required to inflate the plug from the above ground control panel.

f. Any visible leaks in manholes or structures to be utilized during the test shall be repaired prior to start of filling the test section with water.

g. When the level of the ground water table is of such height that upstream manholes or structures cannot be used to provide the required head, or if the vertical distance between the top of the pipe and the upstream manhole or structure rim is less than 4 feet, the Contractor shall utilize another specified method to perform the leakage test.

h. Tolerances

i. PCCP - The leakage rate shall be no more than 10 gallons per inch nominal diameter per mile per day (gal/in/mi/day).

ii. HDPE - The leakage rate shall be no more than 10 gal/in/mi/day.

iii. FRP - The leakage rate shall be no more than 10 gal/in/mi/day.

iv. PVC - The leakage rate shall be no more than 10 gal/in/mi/day, except for pipes 15-inch in diameter or less in which the leakage rate shall be no more than 50 gal/in/mi/day.

3. Infiltration Testing of Sewer Pipe

a. Infiltration shall be measured by the amount of water collected in the downstream manhole or structure of the section being tested.

b. The average ground water level shall be at least 1 foot above the top of the highest elevation of the pipe section being tested. When the level of the ground water table is not sufficient, the Contractor shall utilize another method specified in this Section to perform the leakage test.

c. Infiltration testing shall not be used to test for leakage on pipe sections encased in concrete or controlled low strength material.

d. The test period shall be at least three days.

e. Mechanical or pneumatic plugs shall be used to isolate test sections from upstream flows. A weir or plug shall be placed in the downstream manhole or structure to enable measurement of any leakage generated by infiltration in the test section. If pneumatic plugs are used, a separate hose shall be required to inflate the plug from the above ground control panel.

f. The Contractor shall provide a positive method of releasing entrapped air in the sewer prior to taking measurements.

g. Any visible leaks in manholes or structures to be utilized during the test shall be repaired prior to start the leakage test.

h. Tolerances

i. PCCP - The leakage rate shall be no more than 10 gallons per inch nominal diameter per mile per day (gal/in/mi/day).

ii. HDPE (welded joints) - The leakage rate shall be no more than 5 gal/in/mi/day.

iii. HDPE (gasketed joints) - The leakage rate shall be no more than 10 gal/in/mi/day.

iv. FRP - The leakage rate shall be no more than 10 gal/in/mi/day.

v. PVC - The leakage rate shall be no more than 10 gal/in/mi/day, except for pipes 15-inch in diameter or less in which the leakage rate shall be no more than 50 gal/in/mi/day.

J. The Contractor shall use one of the following methods or a combination of the following methods to perform the required leakage testing on manholes and structures. All

methods used by the Contractor shall be in accordance with manufacturers' recommendations.

1. Negative Air Pressure (Vacuum) Testing of Manholes and Structures

   a. Precast concrete manholes and structures may be tested though the use of negative air pressure (vacuum) tests. Unless manufacturer's recommendations state otherwise, vacuum testing shall not be used for testing HDPE manholes or structures.

   b. Vacuum testing shall be performed in accordance with ASTM C 1244.

2. Exfiltration Testing of Manholes and Structures

   a. Exfiltration shall be measured by the drop of water level in the manhole or structure being tested.

   b. The manhole or structure being tested shall be filled with clean water to the rim. The loss of water from the manhole or structure shall be measured to be equal to the amount of water which must be added during the test to maintain the original water level.

   c. The manhole or structure being tested shall remain filled with water for an equalization period of at least 24 hours prior to beginning the test. The test period shall be at least two hours.

   d. Mechanical or pneumatic plugs shall be used to isolate manholes or structures from pipe sections. All plugs shall be designed to resist internal testing pressures without the aid of external bracing or blocking. The Contractor may internally restrain and/or externally brace the plugs as an additional safety measure. If pneumatic plugs are used, a separate hose shall be required to inflate the plug from the above ground control panel.

e. Tolerances

i. The leakage rate for each manhole or structure shall be determined using the following equation:

$$L = .03*C$$

Where:
L = maximum leakage rate, gallons per day per manhole or structure
C = circumference of manhole or structure, using the nominal diameter, inches

K. Where existing live sewers and laterals have been replaced with new piping, leakage tests shall be performed by the above-described methods if the sewer section has no laterals between manholes; the sewer section can be plugged off without affecting existing connected facilities; and the flow at the upstream manhole can be bypassed around the section to be tested. If these conditions cannot be met as determined by the Engineer, the sewer section shall be exempt from leakage testing.

L. Leakage tests on storm sewer systems, including storm sewer piping, manholes, structures and catch basins, are not required. However, visibly cracked pipe shall be replaced and visible leaks in these pipes, manholes or catch basins shall be permanently repaired using a method approved by the pipe manufacturer and Engineer and the section retested at no cost to the Owner.

3.13 PIPE SCHEDULE

The following schedule outlines which pipe materials may be used for the different sewage and drainage piping applications on the project:

Identity	Diameter (inch)	Pipe Material	Joints
CSO Conveyance Pipeline	96	PCCP	RG
		LD-HDPE	EW or RG
		FRP	RG

Identity	Diameter (inch)	Pipe Material	Joints
Sanitary and Combined Sewers and Laterals[1]	42 and Greater	PCCP	RG
		LD-HDPE	EW or RG
		FRP	RG
		PVC	RG
	Less than 42	PVC	RG
Separate Storm Sewers and Laterals	All Diameters	PVC	RG
Temporary CSO Overflows	All Diameters	CMP	RG

Note:
1) "Combined sewers" includes all overflows to the CSO Conveyance Pipeline and to Onondaga Creek.

Key:
PCCP - Prestressed Concrete Cylinder Pipe
LD-HDPE - Large Diameter High Density Polyethylene Pipe
FRP - Fiberglass Reinforced Polymer Pipe
CMP - Corrugated Metal Pipe
EW - Extrusion Weld
RG - Rubber Gasket

3.14 SANITARY SEWER BUILDING LATERALS TO BE REMOVED AND REPLACED

A. The Contractor shall remove and replace any sanitary sewer laterals to buildings encountered during construction. All sanitary sewer laterals shall be replaced as detailed on the Contract Drawings and as specified in this Specification Section.

END OF SECTION

SECTION 02618

DUCTILE IRON PIPE

PART 1 GENERAL

1.01 SUMMARY

A. This Section includes centrifugally cast ductile iron pipe and fittings of the thickness class as specified, or as indicated on the Contract Drawings.

1.02 RELATED SECTIONS

A. Section 02300 Earthwork
B. Section 02501 Underground Pressure Piping Installation
C. Section 02510 Water Distribution System
D. Section 02530 Sewage and Drainage Piping Installation
E. Section 02675 Pressure and Leakage Testing
F. Section 03300 Cast-in-Place Concrete

1.03 REFERENCES

A. Material and installation shall be in accordance with the latest revisions of the following codes, standards, and specifications, except where more stringent requirements have been specified herein.

1. American National Standards Institute (ANSI)
2. American Water Works Association (AWWA)
3. American Society for Testing and Materials (ASTM)
4. American Society of Mechanical Engineers (ASME)

1.04 SUBMITTALS

A. Submittals shall be in accordance with the provisions set forth in the Special Project Conditions, General Provisions, and General Specifications.

B. Certified copies of the manufacturer's Performance Affidavit, in accordance with the Special Project Conditions, stating that pipe and fittings were manufactured and tested in accordance with applicable provisions in the above-specified Standards shall be submitted.

C. Prior to obtaining any material in connection with this Section, detailed shop drawings, installation guides, and data on pipes, fittings, couplings, supports, anchors, bolts, nuts, and other necessary accessories shall be submitted.

1.05 QUALITY ASSURANCE

A. All shipments of pipe shall be tested, at the Contractor's expense, in accordance with the provisions for testing in the applicable standards.

PART 2 PRODUCT

2.01 MANUFACTURERS

A. The following are acceptable manufacturers of ductile iron pipe:

1. United States Pipe and Foundry Company
2. American Cast Iron Pipe Company
3. Approved equal

B. The following are acceptable manufacturers of straight couplings:

1. Smith Blair Product 441, Limited Range only.
2. Dresser Style 38 and 138.
3. J.C.M. Industries Product 210.
4. Clow Product 3203.
5. Romac Industries Style 501.
6. Ford Meter Box Company Style FC-1.
7. Cascade Product CDC.
8. Approved Equal.

2.02 MATERIAL

A. Ductile Iron Pipe

1. Ductile iron pipe shall be centrifugally cast, manufactured and tested in accordance with AWWA C-150 and C-151.

2. The pressure class for all buried ductile iron pipe shall be 350 psi, unless indicated otherwise on the Contract Drawings.

B. Pipe Joints

1. Buried ductile iron pipe shall have push-on joints in conformance with AWWA C111, unless specified or shown otherwise on the Contract Drawings. Push-on joints shall be made using lubricant furnished by the manufacturer. The joint shall be made by guiding the plain end into the bell until contact is made with the gasket and exerting sufficient

force to drive the pipe home until penetration is made to the depth recommended by the manufacturer.

2. Mechanical joints may be used for closures, subject to meeting thrust restraint requirements, or as shown on the Contract Drawings. Mechanical joints shall be assembled in accordance with AWWA C111. All bolts shall be tightened by means of torque wrenches such that the follower shall be brought up evenly. If effective sealing is not obtained at the specified torques, the joint shall be disassembled, cleaned and reassembled. Mechanical joints to be made with restraining glands shall be installed in compliance with manufacturer's recommendations.

3. Flanged joints shall be in accordance with AWWA C115 and shall be assembled with through bolts of the size required for the pipe being installed unless otherwise shown or required. Connecting flanges shall be in proper alignment and no external force shall be required or used to bring them together. All flanges shall be in accordance with ANSI/AWWA C115/A21.15 and shall be rated for 350 psi or greater working pressure. The flanges shall have facing and drilling identical to ASME/ANSI B16.1, Class 125 flanges.

   a. Flange bolts and nuts shall be steel, ASTM A307, Grade B, and shall be cadmium plated except where other materials are called for in the pipe schedule. Cadmium plating shall be a thickness of 0.0003 to 0.0005 inches.

   b. Gaskets for flanged water piping shall be reinforced rubber Chesterton Model No. 120, or approved equal.

   c. Filler flanges and beveled filler flanges shall be furnished and installed as required. Filler flanges and beveled filler flanges shall be furnished faced and drilled complete with extra length bolts. Filler and beveled filler flanges shall be Clow F-1984 and F-1986, respectively, or approved equal.

4. Grooved and shoulder type joints of the rigid design may be used in lieu of flanged joints with prior acceptance of the Engineer and shall be in accordance with AWWA C606.

a. Couplings shall be ductile iron using Type 316 stainless steel bolts and nuts with nitrile based rubber gaskets as manufactured by Victaulic Style 31, Construction Forms, Inc., or equal.

C. Fittings

1. Fittings for buried ductile iron pipe shall be ductile iron with mechanical joint unless indicated otherwise on the Contract Drawings. Mechanical joint fittings shall be compact body, manufactured and tested in accordance with AWWA C-153.

2. The pressure class for all fittings shall be 350 psi, unless indicated otherwise on the Contract Drawings.

3. Mechanical joints for fittings shall be in accordance with AWWA C-111. The required joint accessories including ductile iron glands, high strength low-alloy steel tee bolts and nuts, plain backed rubber gaskets, and joint lubricant shall be supplied by the pipe manufacturer.

D. Straight Couplings

1. General

a. Sleeve type couplings shall be constructed from ductile iron or steel. All hardware, including bolts and nuts, shall be Type 316 stainless steel.

b. Sleeve type couplings shall be sized to fit the outside diameter of the pipes they connect.

c. Gaskets shall be natural or synthetic rubber of a grade suitable for the intended service.

2. Standards

a. ANSI/AWWA C111 - Rubber-Gasket Joints for Ductile-Iron and Gray Iron Pressure Pipe.

b. ASTM A536 - Standard Specification for Ductile Iron Castings.

E. Thrust-Restraint

1. Thrust Blocks

a. Concrete thrust blocks shall be furnished and installed as indicated and specified on the Contract Drawings.

2. Push-On Joint Locking Gasket Type

a. The locking gasket type restrained joint shall consist of stainless steel locking segments molded into the pipe gasket that are designed to grip the spigot end of the pipe to prevent joint separation.

b. Locking gasket-type restraints shall be Field Lok gaskets, as manufactured by United States Pipe and Foundry Company, or equal.

c. Locking gasket-type restraints shall be used where indicated on the Contract Drawings.

3. Mechanical Joint Retainer Type

a. Thrust restraint mechanical joint retainers shall be a multiple wedge style restraint mechanism with ductile iron components conforming to ASTM A536 Grade 60-42-10. Proper actuation of the wedges shall be ensured with torque limiting twist-off nuts. Ductile iron wedges shall be heat treated to a range of 370 to 470 BHN.

b. Mechanical joint retainer restraint shall be capable of full mechanical joint deflection during assembly, and shall be capable of joint deflection after assembly.

c. Mechanical joint retainer restraints shall be pressure rated at 350 psi with a minimum safety factor of 2 to 1.

d. Mechanical joint retainer restraints shall be Series 1100 Megalug, as manufactured by Ebaa Iron, or equal.

e. Mechanical joint retainer restraints shall be used where indicated on the Contract Drawings.

4. Push-On Restrain Harness

a. Push-on joint ductile iron pipe shall be restrained using Series 1700 Megalug, as manufactured by Ebaa Iron, or equal.

2.03 FINISHES

A. Coating, painting and lining shall be as follows unless otherwise specified.

1. Pipe installed in the ground, in exposed exterior locations, in contact with water or inside structures, but not scheduled for painting:

Pipe Interior	AWWA C-104 standard thickness cement mortar lining.
Pipe Exterior	Asphalt seal-coat per AWWA C-104

PART 3 EXECUTION

3.01 INSTALLATION

A. Ductile iron pipe used in pressure applications shall be installed in accordance with Section 02501 Underground Piping Installation.

B. Ductile iron pipe used in plant water and potable water distribution system applications shall be installed in accordance with Section 02510 Water Distribution System.

C. Ductile iron pipe used in non-pressure applications shall be installed in accordance with Section 02530 Sewage and Drainage Piping Installation.

3.02 TESTING

A. All ductile iron pipe used in plant water and potable water distribution system applications shall be tested in accordance with Section 02510 Water Distribution System.

B. All ductile iron pipe used for sewage and drainage applications shall be tested in accordance with Section 02530 Sewage and Drainage Piping Installation.

C. All ductile iron pipe used in pressure applications shall be tested in accordance with Section 02675 Pressure and Leakage Testing.

END OF SECTION

SECTION 02620

POLYVINYL CHLORIDE (PVC) NON-PRESSURE PIPE

PART 1 GENERAL

1.01 SUMMARY

A. This section includes the material and quality requirements, for polyvinyl chloride (PVC) non-pressure pipe and fittings.

1.02 RELATED SECTIONS

A. Section 02530 Sewage and Drainage Piping Installation

1.03 REFERENCES

A. Material and installation shall be in accordance with the latest revisions of the following codes, standards, and specifications, except where more stringent requirements have been specified herein:

1. American National Standards Institute (ANSI)
2. American Society for Testing and Materials (ASTM)

1.04 SUBMITTALS

A. Submittals shall be submitted in accordance with the provisions set forth in the Special Project Conditions, General Provisions, and General Specifications.

B. Prior to obtaining any material in connection with this Section, detailed shop drawings and manufacturers' data of the pipe, joints and fittings showing compliance with this specification shall be submitted.

C. Other Submittals

1. Manufacturer's affidavit that all delivered materials comply with the requirements of the specified Standards.

1.05 DELIVERY, STORAGE, AND HANDLING

A. Polyvinyl chloride pipe shall be handled and stored in accordance with the manufacturer's recommendations.

PART 2 PRODUCT

2.01 MATERIALS

A. Pipe

1. Polyvinyl chloride pipe shall be made from Class 12454-B materials or better in accordance with ANSI/ASTM D 1784.

2. Polyvinyl chloride pipe and accessories for non-pressure services shall conform to the requirements of the following with a minimum pipe stiffness of 46 psi at a maximum deflection of five percent.

ANSI/ASTM D3034: (4" - 15" diameter)
ASTM F679: (18" - 27" diameter)
ASTM F794: (30" - 48" diameter)
ASTM F1803 (18" - 60" diameter)

B. Fittings and Couplings

1. Polyvinyl chloride fittings and couplings shall conform to the requirements of the PVC pipe for classification and size.

C. Joints

1. Joints shall be of the push-on type with integral bell and elastomeric joints.

2. Rubber gaskets for elastomeric joints shall conform to ANSI/ASTM F477.

a. Lubricant for the joints shall be furnished by the pipe manufacturer.

b. The rubber gaskets shall be factory installed in the bell of the pipe, fittings and couplings, except for pipe supplied in accordance with ASTM F794 which shall have rubber gaskets factory installed in the spigot of the pipe, fittings and couplings.

3. The plain end of the pipe shall be marked by the manufacturer to show the depth of penetration into the bell or coupling.

PART 3 EXECUTION

3.01 INSTALLATION

A. General

1. Polyvinyl chloride non-pressure pipe shall be installed in accordance with the applicable provisions of Section 02530, Sewage and Drainage Piping Installation and the manufacturer's installation instructions.

B. Testing

1. All testing shall be in accordance with Section 02530 Sewage and Drainage Piping Installation.

END OF SECTION

SECTION 02621

FIBERGLASS REINFORCED POLYMER (FRP) PIPE

PART 1 GENERAL

1.01 SUMMARY

A. This specification section includes the material and quality requirements for fiberglass reinforced polymer (FRP) pipe and fittings with a nominal size of 42 inch diameter to 96 inch diameter meeting the requirements of ASTM D-3262.

1.02 RELATED SECTION

A. Section 02530 Sewage and Drainage Piping Installation

1.03 REFERENCES

A. Material and Installation shall be in accordance with the latest revisions of the following codes, standards and specifications, except where more stringent requirements are specified herein:

ASTM D638 - Test Method for Tensile Properties of Plastics.

ASTM D2412 - Standard Test Method for Determination of External Loading Characteristics of Plastic Pipe by Parallel-Plate Loading.

ASTM D3262 - Standard Specifications for Fiberglass (Glass-Fiber-Reinforced Thermosetting-Resin) Sewer Pipe.

ASTM D3681 - Standard Test Method for Chemical Resistance of "Fiberglass" (Glass-Fiber-Reinforced Thermosetting-Resin) Pipe in a Deflected Condition.

ASTM D3753 - Standard Specification for Glass-Fiber-Reinforced Polyester Manholes and Wet wells.

ASTM D4161 - Standard Specifications for "Fiberglass" (Glass-Fiber-Reinforced Thermosetting-Resin) Pipe Joints Using Flexible Elastomeric Seals.

ASTM F477 - Standard Specification for Elastomeric Seals (Gaskets) Joining Plastic Pipe.

1.04 SUBMITTALS

A. Manufacturer's data and drawings of the pipe, joints, fittings and submittals shall be in accordance with the provisions set forth in the Special Project Conditions, General Provisions and General Specifications.

B. Prior to obtaining any material in connection with the work of this specification section, detailed shop drawings shall be submitted.

C. Other Submittals

1. Manufacturer's data and drawings of the pipe, joints, fittings, and connection details to new and existing structures, showing compliance with this Section.

2. Manufacturer's reports or data that demonstrate that pipe materials conform to ASTM D3264.

3. Design calculations and sets of the tabulated layout schedule as outlined in ASTM D3753. Design calculations shall be performed by a professional engineer licensed in the State of New York. Design calculations shall be performed for each pipe diameter, loading condition and bedding condition.

4. Layout drawings for entire project of pipe to be provided.

5. Manufacturer's technical data for crack repair.

6. Manufacturer's performance affidavit in accordance with the Special Project Conditions, General Provisions and General Specifications.

1.05 DELIVERY, STORAGE AND HANDLING

A. FRP pipe and manholes shall be handled and stored in accordance with the manufacturer's instructions.

PART 2 PRODUCTS

2.01 MATERIALS

A. Pipe

1. Manufacture pipe by the centrifugal casing process to result in a dense, non-porous, corrosion-resistant, consistent composite structure.

2. The interior surface of the pipe exposed to sewer flow shall be manufactured utilizing a resin with a 50% elongation (minimum) when tested in accordance with ASTM D638. The interior surface shall provide crack resistance and abrasion resistance. Certification from the resin supplier shall be included in the submittals.

3. The exterior surface of the pipe shall be comprised of a sand and resin layer. The layer shall provide for UV protection to the pipe exterior.

4. Resin Systems: The manufacturer shall use polyester resin systems with a proven history of performance in this particular application. The historical data shall have been acquired from a composite material of similar construction and composition as the proposed product.

5. Glass Reinforcements: The reinforcing glass fibers used to manufacture the components shall be of the highest quality commercial grade E-glass filaments with binder and sizing compatible with impregnating resins.

6. Silica Sand: Sand shall be minimum 98% silica with a maximum moisture content of 0.2%.

7. Additives: Resin additives such as curing agents, pigment, dyes, fillers, thixotropic agents, etc., when used, shall not detrimentally affect the performance of the product.

8. End Squareness: Pipe ends shall be squared to the pipe axis with a maximum tolerance of 1/8".

9. Design

   a. Stiffness: Pipe stiffness shall be in accordance with ASTM D2412.

   b. All pipe shall be designed for earth cover as shown on the Contract Drawings and AASHTO HS-20 truck live load in accordance with ASTM D3753. Pipe shall be bedded as shown on the Contract Drawings.

   c. Portions of the pipe will operate under surcharged conditions; therefore pipe shall be designed for surcharged flow conditions resulting from a water surface elevation of 379.0 feet.

10. Strain Corrosion: The extrapolated 50-year strain corrosion value shall not be less than 0.9% as determined in accordance with ASTM D3681 and D3262.

B. Joints

1. Unless otherwise specified, the pipe shall be field connected with fiberglass sleeve couplings that utilize elastomeric sealing gaskets made of EPDM rubber compound as the sole means to maintain joint water tightness. The joints must meet the performance requirements of ASTM D4161. Joints at tie-ins, may utilize fiberglass, gasket-sealed closure couplings.

C. Fittings

1. Flanges, elbows, reducers, tees, wyes, laterals and other fittings may be contact molded or manufactured from mitered sections of pipe joined by glass-fiber-reinforced overlays.

D. Acceptable Products and Manufacturers

Acceptable products and manufacturers of the materials specified in this Section shall be:

1. HOBAS Pipe USA
2. approved equal

E. Serial Numbering

All pipe produced for this project shall be serially numbered with each pipe having its own number. These numbers shall be traceable to the day, month, and year of manufacturer. Numbers shall be approximately three-eighths inch high digits, stamped into pipe. Painted numbers will not be acceptable. Evidence of tampering with number or date shall be cause for rejection.

PART 3 EXECUTION

3.01 INSTALLATION

A. General Requirements

1. FRP pipe and fittings shall be installed in accordance with applicable provisions of Section 02530 Sewage and Drainage Piping Installation and the manufacturer's instructions.

3.02 TESTING

A. All testing for FRP used in sewage and drainage applications shall be in accordance with Section 02530 Sewerage and Drainage Piping Installation.

3.03 SERVICES OF MANUFACTURER'S REPRESENTATIVE

A. The Contractor shall provide for the services of a competent representative of the FRP manufacturer to provide the following services:

1. Prior to delivery of pipe - a minimum of two (2) hours of on-site instruction in the proper storage, handling, transport, installation, and testing of the FRP to be installed under this Contract, for the Contractor's pipe installation personnel and representatives of the Owner.

2. During pipe installation - the representative of the FRP manufacturer shall observe, instruct, and oversee installation of the first four (4) pieces of FRP installed under this Contract, and certify to the Owner, in writing, that the Contractor's personnel have followed all appropriate procedures, means, and methods during installation of these pieces.

END OF SECTION

SECTION 02622

LARGE DIAMETER HIGH DENSITY POLYETHYLENE (HDPE) PIPE

PART 1 GENERAL

1.01 SUMMARY

A. This section includes the material and quality requirements for large diameter high density polyethylene (HDPE) pipe and fittings and HDPE manholes with a nominal size of 42 inch diameter to 96 inch diameter meeting the requirements of ASTM F-894.

1.02 RELATED SECTIONS

A. Section 02530 Sewage and Drainage Piping Installation

1.03 REFERENCES

A. Material and installation shall be in accordance with the latest revisions of the following codes, standards and specifications, except where more stringent requirements are specified herein:

ASTM D2321	Standard Practice for Underground Installation of Thermoplastics Pipe for Sewers and Other Gravity Flow Applications.
ASTM F894	Specification for Polyethylene (PE) Large Diameter Profile Wall Sewer and Drain Pipe.
ASTM D3350	Specification for Polyethylene Plastics Pipe and Fittings Materials.
ASTM F1759	Standard Practice for Design of High-Density Polyethylene (HDPE) Manholes for Subsurface Applications.

1.04 SUBMITTALS

A. Submittals shall be in accordance with the provisions set forth in the Special Project Conditions, General Provisions, and General Specification.

B. Prior to obtaining any material in connection with the work of this Section, detailed shop drawings shall be submitted.

C. Other submittals

1. Manufacturer's data and drawings of the pipe, joints, fittings, and connection details to new and existing structures, showing compliance with this Section.

2. Manufacturer's reports or data that demonstrate that the pipe materials conform to ASTM F-894 and ASTM D-3350.

3. Design calculations and sets of the tabulated layout schedule as outlined in ASTM F1759. Design calculations shall be performed by a professional engineer licensed in the State of New York. Design calculations shall be performed for each pipe diameter, loading condition and bedding condition.

4. Layout drawings for entire project of pipe to be provided.

5. Manufacturer's performance affidavit in accordance with the Special Project Conditions.

1.05 DELIVERY, STORAGE, AND HANDLING

A. Large diameter HDPE pipe and manholes shall be handled and stored in accordance with the manufacturer's instructions and requirements.

PART 2 PRODUCTS

2.01 MATERIALS

A. Pipe

1. The base polyethylene resin shall be a high density, high molecular weight polyethylene pipe material.

2. Large diameter HDPE pipe shall be made from Type III, Class C, Category 5, Grade P34 materials, or better, in accordance with ASTM D-3350.

3. The dimensions and workmanship of the pipe and accessories shall conform to the requirements of ASTM F-894.

4. The pipe shall only be manufactured from a high density polyethylene material which meets or exceeds the minimum cell classification

requirements for base materials as specified in ASTM F894 when classified in accordance with ASTM D3350. Manufacturer shall certify that the materials used to manufacture pipe and fittings meet these requirements.

5. The polyethylene raw material shall contain a minimum of 2%, well dispersed finely divided carbon black for UV stabilization. Additives which can be conclusively proven not to be detrimental to the pipe may also be used provided that the pipe produced meets or exceeds all of the requirements of this specification.

6. The pipe shall contain no recycled compound except that generated in the manufacturers' own plant, known as re-grind.

7. The pipe material shall be resistant to corrosion resulting from the presence of Hydrogen Sulfide and pH values between 2 and 13.

8. Design

   a. Pipe ring stiffness shall be in accordance with ASTM F894 and correspond to the stiffness required per project conditions.

   b. All pipe shall be designed for earth cover as shown on Contract Drawings and AASHTO HS-20 truck live load in accordance with AWWA C304. Pipe shall be bedded as shown on the Contract Drawings.

   c. Portions of the pipe will operate under surcharged conditions; therefore pipe shall be designed for surcharged flow conditions resulting from a water surface elevation of 379.0 feet.

B. Fittings and Couplings

1. HDPE fittings and couplings shall conform to the requirements of the pipe for classification, size, and dimensions.

C. Joints

1. The pipe shall be produced with bell and spigot end construction and joint sealing shall be accomplished by a rubber gasket or with profile cut ends and joint sealing shall be accomplished by

extrusion welding in accordance with the manufacturer's instructions.

2. Contractor shall provide internal stainless steel stiffeners at all bell and spigot joint connections.

D. Gaskets

1. Rubber gaskets shall comply in all respects with the physical requirements specified in the non-pressure requirements of ASTM F-477. Rubber gaskets shall be supplied by the pipe manufacturer and shall be molded or produced from an extruded shape approved by the manufacturer and spliced into circular form.

E. Joining and Connecting of Extrusion Welded Pipe

Joints between profile cut 'end treatments' on pipes and fittings shall be made in the field, using appropriate extrusion welding procedures. Each individual performing welding must be acknowledged by the Manufacturer as having the necessary skills to undertake the work.

1. Surface Preparation: Areas to be joined shall be clean and dry. The pipe ends to be welded must have a 60-degree to 90-degree weld bevel (30-degree to 45-degree on abutting faces) with a depth that is a minimum of 2 times the thickness of the pipe wall that is being welded. The weld bevel may be produced at the factory on pipes that have been supplied with a profile cut end. When a pipe is cut to length on site, the weld bevel preparation shall be part of the preparation for welding. The weld bevel may be produced using a router or by grinding. All surfaces that will receive extrusion weld material shall be abraded using a hand scraper or grinder to remove surface oxidation that may have occurred subsequent to the weld bevel preparation.

2. Welding Methods: The following method shall be used for joining pipes.

a) Manual Extrusion Welding:

External band clamps may be used to assist with pipe alignment. Temporary internal braces or jacks may also be used to assist with pipe wall alignment. Pipe ends shall be positioned to align the notches and to provide the

maximum amount of surface contact between adjacent pipe faces while minimizing or eliminating the space between pipe ends. Welding is completed using the manual extrusion welding procedure recommended by the pipe manufacturer on the inside or outside bevel that follows the profile winding and crosses the 30° closure at the termination of the profile winding.

3 Joining of Fittings: Fittings - including Wyes, Tees, Elbows and other custom fittings, shall be produced at the manufacturer's facilities. On site joining shall be carried out as described above.

4. The temperature at the welding surface must be 45°F or greater.

F. HDPE Manholes

1. HDPE tee manholes shall be of the size and depth shown on the Contract Drawings. Manhole tee and riser sections shall be fabricated of natural HDPE meeting the requirements of ASTM F894 and shall be designed in accordance with ASTM F1759. Natural HDPE shall give an off white appearance for manhole riser illumination.

G. Connections to Precast Concrete Manholes

1. Closure pipes having a smooth outside surface and profile cut ends or standard bell and spigot ends shall be supplied by the pipe manufacturer and shall be used when making connections to manholes or other structures.

H. Acceptable Products and Manufacturers

Acceptable products and manufacturers of the materials specified in his Section shall be:

1. Spirolite profile wall polyethylene pipe and fittings as manufactured by IPF Company.

2. Approved equal.

I. Serial Numbering

All pipe produced for this project shall be serially numbered with each pipe having its own number. These numbers shall be traceable to the day, month, and year of manufacturer. Numbers shall be approximately three-

eighths inch high digits, stamped into pipe. Painted numbers will not be acceptable. Evidence of tampering with number or date shall be cause for rejection.

PART 3 EXECUTION

3.01 INSTALLATION

A. General Requirements

1. Large diameter HDPE pipe and fittings shall be installed in accordance with applicable provisions of Section 02530, Sewage and Drainage Piping Installation and the manufacturer's instructions.

2. At no time shall the bending radius of the pipe exceed the maximum values specified in the manufacturer's submitted product data.

3.02 TESTING

A. All testing for HDPE used in sewage and drainage applications shall be in accordance with Section 02530 Sewerage and Drainage Piping Installation.

3.03 SERVICES OF MANUFACTURER'S REPRESENTATIVE

A. The Contractor shall provide for the services of a competent representative of the HDPE manufacturer to provide the following services:

1. Prior to delivery of pipe - a minimum of two (2) hours of on-site instruction in the proper storage, handling, transport, installation, and testing of the HDPE to be installed under this Contract, for the Contractor's pipe installation personnel and representatives of the Owner.

2. During pipe installation - the representative of the HDPE manufacturer shall observe, instruct, and oversee installation of the first four (4) pieces of HDPE installed under this Contract, and certify to the Owner, in writing, that the Contractor's personnel have followed all appropriate procedures, means, and methods during installation of these pieces.

- END OF SECTION -

SECTION 02623

SMALL DIAMETER HIGH DENSITY POLYETHYLENE (HDPE) PIPE

PART 1 GENERAL

1.01 SUMMARY

A. This Section includes the material and quality requirements for high density polyethylene (HDPE) pipe.

1.02 RELATED SECTIONS

A. Section 02300 Earthwork
B. Section 02501 Underground Pressure Piping Installation
C. Section 02510 Water Distribution System
D. Section 02530 Sewage and Drainage Piping Installation
E. Section 02675 Pressure and Leakage Testing

1.03 REFERENCES

A. Material and installation shall be in accordance with the latest revisions of the following codes, standards, and specifications, except where more stringent requirements have been specified herein.

1. American National Standards Institute (ANSI)
2. American Society for Testing and Materials (ASTM)
3. Plastics Pipe Institute (PPI)

1.04 SYSTEM DESCRIPTION

A. Pre-Fabricated Dual Containment System

1. The dual containment system shall consist of factory pre-fabricated components, joined and installed on site by the General Contractor.

2. All pre-fabricated pipe and fittings shall provide a continuous annular space between the primary pipe and the containment pipe to accommodate monitoring or alarm systems, or possible flow of fluid from the primary pipe.

3. To allow for joining, pre-fabricated pipe and fittings shall be manufactured with the primary pipe/fitting ends extending 6" beyond the containment pipe/fitting ends.

4. Pre-fabricated dual containment pipe shall have the primary pipe factory installed within the containment pipe, with support spacers installed on the primary pipe.

5. Pre-fabricated dual containment pipe shall be provided in nominal lengths of 20-foot or 40-foot, and shall allow for field adjustment of pipe length.

6. Pre-fabricated dual containment fittings shall have the primary fitting factory installed within the containment fitting, with all necessary support spacers installed.

7. The dual containment system shall be joined to the sliplined Piping system, in accordance with this Section.

8. Pre-fabricated dual containment piping shall be provided for short lengths of piping (less than 20'), fittings, and specialty components, and where shown on the Contract Drawings.

B. Sliplined Dual Containment Piping System

1. The sliplined piping system shall consist of coiled configurations of longer lengths of pipe.

2. The containment pipe shall be installed first, and the primary pipe shall be sliplined inside the containment pipe.

3. The sliplined piping system shall be joined to the dual containment system, in accordance with this Section.

4. Sliplined dual containment piping shall be provided for longer lengths of piping (greater than 20'), and where shown on the Contract Drawings.

C. Non-Pressure System:

1. The non-pressure HDPE vent piping system shall be supplied in accordance with this Section.

D. Water Distribution System:

1. The water distribution HDPE piping system shall be supplied in accordance with this Section.

1.05 SUBMITTALS

A. Submittals shall be submitted in accordance with the provisions set forth in the Special Project Conditions, General Provisions, and General Specifications.

B. Prior to obtaining any materials in connection with this Section, detailed shop drawings on all materials shall be submitted.

C. Other Submittals

1. Manufacturer's data of the pipe, joints, and fittings showing compliance with this Section.

2. Manufacturer's affidavit that all delivered materials comply with the requirements for the specified standards.

3. Proposed fusion procedure and sequences.

4. The polyethylene pipe manufacturer shall provide certification that stress regression testing has been performed on the specific product. The said certification shall include a stress life curve per ASTM D2837. The stress regression testing shall have been performed in accordance with ASTM D2837.

1.06 DELIVERY, STORAGE AND HANDLING

A. HDPE pipe shall be handled and stored in accordance with the manufacturer's recommendations.

PART 2 PRODUCT

2.01 MANUFACTURERS

A. The following are acceptable manufacturers:

1. Driscoplex, as manufactured by Chevron Chemical Company
2. CSR Poly Pipe
3. Approved Equal

B. HDPE pipe and fittings shall be produced by the same manufacturer.

2.02 MATERIALS

A. Materials used for the manufacture of pipe, fittings, and centralizers shall be high density, extra high molecular weight (EHMW), PE3608 polyethylene meeting cell classification of PE345464C per ASTM D3350. Pipe shall be manufactured in accordance with ASTM F714. Manufacturer shall be a member in good standing of the Plastics Pipe Institute.

B. In addition, materials used for the manufacture of HDPE pipe and fittings shall meet the following physical property requirements:

Property	Test Method	Nominal Value
Material Designation	PPI/ASTM	PE3608
Cell Classification	D3350	345464C
Density	D1505	0.955
Melt Index	D1238-E	0.10
Flexural Modulus	D790	136,000
Tensile Strength @ Yield	D638	3,500

C. Pipe, fittings, and centrailizers shall be manufactured from materials meeting the requirements of this Section.

D. Pipe supplied under this specification shall have a nominal IPS (Iron Pipe Size) outside diameter and the Dimension Ratio (DR) and pressure rating of the pipe at 73°F shall match the following unless otherwise specified:

Dual Containment System:

Carrier Pipe	DR 11 - 160 psi
Containment Pipe	DR 17 - 100 psi

Non-Pressure Vent System:

Carrier Pipe	DR 26 - 65 psi

Water Distribution System:

Carrier Pipe	DR 32.5 - 50 psi

E. All fittings shall be pressure rated to match the system piping to which they are joined. At the point of fusion, the outside diameter and minimum wall thickness of the fitting shall match the outside diameter and minimum wall thickness specifications of ASTM F714 for the same size pipe to which it is joined. Dual wall containment fittings shall be fabricated by the manufacturer of the pipe. In addition, the manufacturer of the dual containment fittings in a piping system shall be the same as the manufacturer of the dual containment pipe.

F. Ells, tees, and wyes shall be manufactured by mitered fabrication.

G. The manufacturer shall have written specification for all standard mitered fittings which establishes Quality Control criteria and tolerances.

H. Flange adapters shall be made with sufficient through-bore length to be clamped in a butt fusion joining machine without the use of a stub-end holder. The sealing surface of the flange adapter shall be machined with a series of small V-shaped grooves.

PART 3 EXECUTION

3.01 INSTALLATION

A. HDPE pipe used in pressure applications shall be installed in accordance with Section 02501 Underground Pressure Piping Installation.

B. HDPE pipe used in water distribution systems shall be installed in accordance with Section 02510 Water Distribution System.

C. HDPE pipe used in non-pressure vent applications shall be installed in accordance with Section 02530 Sewage and Drainage Piping Installation.

3.02 TESTING

A. All testing for HDPE used in pressure applications shall be in accordance with Section 02675 Pressure and Leakage Testing.

B. All testing for HDPE used in non-pressure vent applications shall be in accordance with Section 02530 Sewage and Drainage Piping Installation.

C. All testing for HDPE used in plant and potable water distribution systems shall be tested in accordance with Section 02510 Water Distribution System.

END OF SECTION

SECTION 02624

PERFORATED PLASTIC PIPE

PART 1 GENERAL

1.01 SUMMARY

A. This section includes the material and quality requirements, for perforated plastic drainage pipe and fittings.

1.02 RELATED SECTIONS

A. Section 02530 Sewage and Drainage Piping Installation

1.03 REFERENCES

A. Material and installation shall be in accordance with the latest revisions of the following codes, standards, and specifications, except where more stringent requirements have been specified herein:

1. American National Standards Institute (ANSI)
2. American Society for Testing and Materials (ASTM)

1.04 SUBMITTALS

A. Submittals shall be submitted in accordance with the provisions set forth in the Special Project Conditions, General Provisions, and General Specifications.

B. Prior to obtaining any material in connection with this Section, detailed shop drawings and manufacturers' data of the pipe, joints and fittings showing compliance with this specification shall be submitted.

C. Other Submittals

1. Manufacturer's affidavit that all delivered materials comply with the requirements of the specified Standards.

1.05 DELIVERY, STORAGE, AND HANDLING

A. Perforated plastic pipe shall be handled and stored in accordance with the manufacturer's recommendations.

PART 2 PRODUCT

2.01 MATERIALS

A. Perforated Pipe, Polyethylene (PE) Plastic Pipe and Fittings: ASTM F 405, corrugated, for coupling joints.

1. Couplings: Band type

2. Manufacturers:

a. Advance Drainage Systems, Inc.

b. Hancor, Inc.

c. Lane Enterprises, Inc.

d. Or equal

B. Pipe, fittings, and joining methods according to the following applications:

1. Pipe Sizes 4 to 8 Inches: AASHTO M 294 Interim, corrugated, high density polyethylene (HDPE) plastic pipe and fittings; couplings with seals; and watertight, coupled joints.

2. Pipe Sizes 4 to 12 Inches: ASTM F 405 perforated polyethylene.

PART 3 EXECUTION

3.01 INSTALLATION

A. Pipe Joint Construction

1. Polyethylene (PE) Plastic Pipe and Fittings:

a. Join pipe, tubing, and gasketed fittings with elastomeric seals for watertight joints according to ASTM D 2321 and manufacturer's written instructions.

b. Install according to ASTM D 2321 and manufacturer's written instructions.

B. General

1. Perforated plastic drainage pipe shall be installed in accordance with the applicable provisions of Section 02530, Sewage and Drainage Piping Installation and the manufacturer's installation instructions.

C. Testing

1. All testing shall be in accordance with the applicable provisions of Section 02530, Sewage and Drainage Piping Installation.

END OF SECTION

SECTION 02646

RIP RAP

PART 1 - GENERAL

1.01 SUMMARY

A. This section includes all labor, materials and equipment necessary to complete the rip rap bank restoration including but not limited to base preparation and placing and grouting stone rip rap at the location shown on the Contract Drawings.

1.02 RELATED SECTIONS

A. Section 02270 - Geotextile Fabric
B. Section 02300 - Earthwork
C. Section 02305 - Subbase

PART 2 - PRODUCTS

2.01 MATERIALS

A. Rip-rap shall consist of durable quarry stone, as nearly as practicable in the form of right rectangular prisms. Meet requirements of NYSDOT Standard Specification 620.06.

B. One dimension of each of the stones furnished shall be approximately equal to 12 inches and the weight of each stone piece shall be approximately 100 lbs. The stone shall be so laid that this dimension shall be perpendicular to the prepared bed.

C. Aggregate base material shall be type "E" material as specified in Section 02230 selected-fill. Preparation of basic material shall be specified in Section 02305 subbase.

D. Geofabric shall be geotextile stabilization fabric as specified in Section 02270 - Geotextile Fabric. Placement of fabric shall be as specified in Section 02270 - Geotextile Fabric.

PART 3 - EXECUTION

3.01 Installation

A. Prior to placing rip-rap, a geotextile stabilizing fabric material and 12" bed of aggregate base material shall be installed.

B. The stones shall be placed so that the weight of the stone is carried by the underlying material and not be the adjacent stones.

C. On slopes the largest stones shall be placed at the bottom.

D. All rip-rap shall be properly aligned and in close contact and shall rest on a 12-inch bed of Type E gravel. The space between stones shall be completely filled with grout, the material upon which the grouted rip rap is laid shall not be allowed to occupy the space between stones.

E. When the stones are in place, the spaces between them shall be completely filled with grout and the surface of the stones cleaned to remove accumulations of grout. Rip-rap shall not be grouted in freezing weather. The grouted rip-rap shall be kept moist for seven days after grouting. A suitable curing compound may be employed if reviewed by the Engineer.

F. The Engineer may direct that occasional spaces be left ungrouted for relief of hydrostatic pressure. The ungrouted spaces shall be chinked with spalls of suitable size.

END OF SECTION

SECTION 02675

PRESSURE AND LEAKAGE TESTING

PART 1 GENERAL

1.01 SUMMARY

A. This Section includes pressure and leakage testing requirements for all underground pressure pipes installed under this Contract.

1.02 RELATED SECTIONS

A. Section 02501 Underground Pressure Piping Installation
B. Section 02510 Water Distribution System
C. Section 02618 Ductile Iron Pipe

1.03 REFERENCES

A. Testing shall be in accordance with the latest revisions of the following codes, standards, and specifications, except where more stringent requirements are specified herein:

1. American Water Works Association (AWWA)
2. National Fire Protection Association (NFPA)

1.03 SUBMITTALS

A. Submittals shall be submitted in accordance with the provisions set forth in the Special Project Conditions, General Provisions, and General Specifications.

B. For each test, a completed Tabulation Sheet (Attachment A) shall be submitted.

C. Proof of testing as required by County, State, or Federal Agencies and this Section shall be submitted.

PART 2 PRODUCT

2.01 WATER SUPPLY

A. Water supplied for flushing and testing shall be clean, clear and from potable sources acceptable to the Engineer.

B. All water necessary for flushing and testing shall be furnished and disposed of in accordance with the Special Project Conditions, General Provisions and General Specifications.

PART 3 EXECUTION

3.01 TEST REQUIREMENTS

A. All pressure piping shall be tested in accordance with AWWA Standard C-600. The following procedure shall be used:

1. All newly laid pipe, or any valved sections thereof, shall be subjected to a hydrostatic pressure 50 percent in excess of the working pressure at any point in the section being tested, but in no case less than 50 pounds per square inch for a period of two hours, unless stated otherwise in the Contract Documents.

2. The Contractor shall accomplish the required tests on the pipeline by individually testing each component section of the installed main. The maximum length of section permitted to be tested at any one time will be approximately 1,000 linear feet, and normally will be less.

B. Test Pressure Restrictions

1. The test pressure shall not be less than 50 psi at the highest point along the test section.

2. The test pressures shall not exceed pipe or thrust restraint design pressures.

3. The test pressures shall be of at least 2-hour duration and not vary by more than $\pm$5 psi.

4. The test pressures shall not exceed twice the rated pressure of the valves when the pressure boundary of the test section includes closed gate valves.

C. Leakage Test

1. All leakage tests shall be conducted concurrently with the pressure test.

2. Leakage shall be defined as the quantity of water that must be supplied into the newly laid pipe, or any valved section thereof, to maintain pressure

within 5 psi of the specified test pressure throughout the duration of the test after the pipe has been filled with water to the test pressure.

3. The rate of leakage shall not exceed 11 gallons per day, per mile of pipe, per inch of nominal pipe diameter based on a test pressure of 150 psi. To calculate allowable leakage in gallons per hour (gph) for other test pressures, refer to AWWA C600.

3.02 FIELD MEASUREMENTS

A. The length of the test section shall be measured.

B. The quantity of water used to maintain test pressure during test period shall be measured.

C. All measurements required to complete the Tabulation Sheet (Attachment A) shall be measured and recorded.

3.03 COORDINATION

A. 48-hour notice shall be provided to the Engineer, County's Fire Coordinator Office Representative, and the local water department when water for flushing and testing is required.

B. Owner of existing water system shall operate all valves and hydrants unless Contractor has been authorized by the owner of the existing water system to operate water systems, valves and hydrants.

3.04 PREPARATION

A. The Contractor shall supply all plugs, pumps, weirs, gauges, etc., necessary to conduct the tests, including means to accurately measure the quantity of water used to maintain test pressure during the test period.

B. All piping systems shall be flushed with water prior to testing.

3.05 TESTING

A. Pressure and leakage tests shall be conducted on all pressure piping.

B. The Engineer and the County Fire Coordinator Office Representative shall be notified of the test at least 48-hours in advance and shall witness all tests.

C. All test results shall be recorded on the Tabulation Sheet (Attachment A).

D. Each section of pipe to be tested shall be slowly filled with water. The specified test pressure, based on the elevation of the lowest point of the line or section under test and corrected to the elevation of the test gauge, shall be applied by means of a pump connected to the pipe.

E. Before applying the specified test pressure, air shall be expelled completely from the pipe and valves.

F. Any exposed pipe, fittings, valves, and joints shall be examined carefully during the test. Any damaged or defective pipe, fittings, or valves that are discovered following the pressure test shall be repaired or replaced with sound material as directed by the Engineer and the test shall be repeated.

G. All visible leaks, regardless of the amount, shall be repaired.

H. If the section being tested fails to pass the pressure or leakage test, the Contractor shall determine, at his own expense, the source or sources of leakage, and shall permanently repair or replace all defective materials and/or workmanship. The extent and type of repair as well as results, shall be subject to the approval of the Engineer. The completed pipe installation shall then be retested and required to meet the pressure and leakage requirements of this test.

I. Testing and retesting shall be completed prior to final restoration.

J. The use of sealants, applied from outside or inside of pipe, is not acceptable.

END OF SECTION

(ATTACHMENT A FOLLOWS)

ATTACHMENT A

FLUSHING AND LEAKAGE TESTING
TABULATION SHEET

Job No. _____ Location _____
Contract No. ____ Contractor _____
Project _____
Contractor's Representative _____ Observed by _____

FLUSHING

Date _____ Weather _____ Temperature _____
Section Flushed _____ ft. of ____-inch diameter pipe
Line Flushed _____ hrs. _____ min. @ _____gal/min
Line Flushed Through _____ Manhole # _____

PRESSURE AND LEAKAGE TESTING

Date _____ Weather _____ Temperature _____
Section Tested _____
____ ft. of ____-inch diameter _____ pipe in ____-ft. laying lengths
Time Started _____ Time Finished _____ Elapsed Time _____
Test Pressure: Start _____ psi Finish _____ psi
Water to Make up Initial Pressure _____ gallons
Allowable leakage, as calculated _____ gallons
_____ gallons (allowable leakage from AWWA C600 or Technical Provisions Section _____)

Pass ____ Fail ____

$$L = \frac{SD\sqrt{P}}{133{,}200^*}$$

L = Allowable leakage in gallons/hour
S = Length of pipe tested (linear feet)
D = Nominal diameter of pipe (inches)
P = Average pressure during test, psi

*Refer to C600 for additional allowance leakage against closed metal-seated valves.

SECTION 02721

PAVING AND SURFACING

PART 1 GENERAL

1.01 SCOPE

A. This Section is subject to the applicable requirements of the Contract Documents.

B. The work includes all Paving and Surfacing required by the Contract and, in general, includes the following items:

1. Type A roadway pavement including:
   a) Geotextile fabric.
   b) Subbase course: Granular material - crushed stone.
   c) Asphalt concrete foundation course.
   d) Asphalt concrete binder course.
   e) Asphalt concrete top course.

2. Type B roadway pavement including:
   a) Geotextile fabric.
   b) Subbase course: Granular material - crushed stone.
   c) Fiber-Reinforced Portland cement concrete base.
   d) Asphalt concrete binder course.
   e) Asphalt concrete top course.
3. Hand excavation as required.
4. Pavement repair.
5. Testing as required.

C. Related work:

1. Excavation and grading: Refer to Section 02300 - Earthwork.
2. Section 02305 - Subbase.

1.02 QUALITY ASSURANCE

A. Asphalt concrete pavement within the City of Syracuse right-of-way shall be in accordance with the current City Department of Public Works Standards and Specifications for materials, workmanship, installation and testing procedures.

B. Testing and Inspection Service:

1. The Owner shall hire and pay for the services of an independent testing laboratory to perform testing for quality assurance. The Contractor shall provide free access to trenches and paved areas for the purpose of making such tests.

1.03 SUBMITTALS

A. Submit all pavement subgrade in-place field density test reports to the Engineer.

1.04 PRODUCT HANDLING

A. Store materials properly to prevent damage, deterioration and contamination. Aggregates shall be stockpiled in a well-drained location.

B. All asphalt materials and mixes shall be applied at temperatures within their optimum range as defined by NYSDOT Standard Specifications.

1.05 JOB CONDITIONS

A. The Contractor shall adhere to all safety policies and shall apply and pay for all permits and comply with all regulations of the agencies of government having jurisdiction.

1. When performing work within the public right-of-way, the Contractor shall comply with all City of Syracuse regulations.

2. Minimum 12 feet wide paving machines are required for streets within the public right-of-way and all other areas accessible to a 12 foot wide machine.

B. Subbase course: Do not place or compact the subbase course material when there is frost or an excess amount of water in the subgrade. Subbase course material shall be placed when the atmospheric temperature is above 35 degrees F. Areas that are damaged by freezing, rainfall, or other weather conditions after material placement is completed shall be corrected to meet specified requirements.

C. Asphalt: Asphalt work shall not be done when the air temperature is below 50 degrees F, the ground surface temperature is below 40 degrees F or when the subbase course material is wet.

1.06 APPLICABLE CODES, STANDARDS AND SPECIFICATIONS

A. The work under this Section shall conform to the following, except as modified herein:

1. American Society for Testing and Materials (ASTM), Standard Specifications and Methods of Testing.

2. New York State Department of Transportation (NYSDOT), Standard Specifications.

PART 2 PRODUCTS

2.01 MATERIALS

A. Geotextile fabric: Fabric woven from monofilaments of polypropylene; Mirafi 500X as manufactured by Nicolon / Mirafi Group, Norcross, GA, or approved equal.

B. Subbase course material: Crushed stone, NYSDOT 703-0201.

1. Sharp, angular fragments of crushed limestone or other approved crushed rock.

2. Uniform quality throughout, well graded, free from dirt, clay and debris.

3. Crushed gravel will not be acceptable as crushed stone.

4. Gradation shall conform to NYSDOT 304-2.02 Type 2 as follows:

Sieve Size Designation	Percentage Passing Weight
2 inch	100
1/4 inch	25-60
No. 40	5-40
No. 200	0-10

C. Foundation course: Asphalt Concrete, NYSDOT Section 403, Table 403-1, Bituminous Plant Mixture, Base Type 1.

D. Surface course:

1. Binder course: Asphalt concrete, NYSDOT Section 403, Table 403-1, Bituminous Plant Mixture, Binder Type 3.

2. Top course: Asphalt concrete, NYSDOT Section 403, Table 403-1, Bituminous Plant Mixture, Top Type 7.

E. Asphalt filler: NYSDOT 702-0700.

PART 3 EXECUTION

3.01 PREPARATION

A. Check the grades and subgrades for conformity with the Contract Drawings.

B. At all locations where new asphalt pavement is to abut existing asphalt pavement to remain, saw cut the existing pavement to provide a clean, true edge against which to abut the new pavement.

C. Tolerances for all work:

1. Grades: Deviations in excess of 1/2 inch from the grades established by the spot elevations and contours will not be acceptable.

2. Profile of the pavement subgrade: Deviation in excess of 3/8 inch when checked with a 10'-0" straight edge will not be acceptable.

3. Profile and section of subbase course material: Deviation in excess of 3/8 inch when checked with a 10'-0" straight edge will not be acceptable.

4. Profile and section of asphalt foundation and surface course: Deviation in excess of 1/4" when checked with a 10'-0" straight edge will not be acceptable.

5. Surfaces shall be even.

6. Thickness of pavement courses shall not vary more than 1/4" from the details.

D. If the required surface course tolerances are not met, the Contractor will be required to correct the deficiencies to conform to the specified tolerances at no additional cost to the Owner. The Contractor will be required to remove and replace the deficient asphalt concrete or place an additional 1" top course of asphalt concrete over the entire pavement surface.

E. Compaction equipment:

1. All compaction of the roadway pavement subgrade and compaction and rolling of the asphalt concrete pavements courses shall be done with a 10-ton smooth wheeled roller.

2. All compaction of the walk pavement subgrade and compaction and rolling of the asphalt concrete pavements courses shall be done with a 5-ton smooth wheeled roller.

3. Where a roller will not fit, use a hand-operated vibratory compactor.

3.02 PAVEMENT SUBGRADE

A. Compact the pavement subgrade to form a smooth and even surface.

1. Compact the subgrade at optimum moisture content as determined by ASTM D 1557 to 95% density as determined by in-place field density tests, ASTM D 1556.

2. Ruts or soft, yielding spots in the subgrade, areas having inadequate compaction, and deviations of the surface from the requirements set forth herein shall be corrected by loosening and removing soft or unsatisfactory material and by adding approved material, reshaping to line and grade, and recompacting to the specified density requirements.

3. Excess excavations shall be filled with fill material and compacted.

4. Install the geotextile fabric with 24" lapped joints and according to the manufacturer's recommendations.

3.03 SUBBASE COURSE

A. Place the subbase course material in layers on the compacted subgrade including geotextile fabric. Each layer shall not exceed 4 inches in depth. Back dump subbase course material on the geotextile fabric. Do not drive vehicles directly on the geotextile fabric.

B. Compact each layer of subbase course material until there is no movement or weaving of the material under the roller or compactor.

C. Subbase course material shall be so placed that when compacted, it will be true to the grades or levels required with the least possible surface disturbance. The Contractor's procedures shall be designed to obtain true grades, to minimize segregation and degradation, to adjust the water content, and to insure an acceptable subbase course.

3.04 ASPHALT FILLER

A. At locations where asphalt concrete binder and top courses are to abut existing asphalt pavement to remain, saw cut the existing pavement to provide a clean straight vertical edge against which to abut the binder and top. Apply tack coat to existing pavement edge.

B. After the subbase course material is placed and compacted, apply one coat of asphalt filler continuously along the vertical saw cut face of the existing asphalt pavement to remain.

3.05 PLACING ASPHALT CONCRETE COURSES

A. Place hot-mixed asphalt mixture on the prepared surface, spread, and strike off. Spread mixture at a temperature between 250 and 325 degrees F. Place areas inaccessible to equipment by hand. Place each course to the required grade, cross-section, and compacted thickness.

3.06 FOUNDATION COURSE

A. Place the foundation course over the subbase course material as detailed with a self-propelled paver. Place the material by hand where a paver will not fit.

B. Compact the material until maximum compaction is achieved.

3.07 SURFACE COURSE - ASPHALT CONCRETE

A. Place the surface course over the asphalt concrete foundation course material as detailed.

1. Binder course:

a) Place the material with a self-propelled paver. Where the paver will not fit, place the material by hand.

b) Compact the material until maximum compaction is obtained.

2. Top course:

a) Place the material with a self-propelled paver. Where the paver will not fit, place the material by hand.

b) Compact the material until maximum compaction is obtained.

c) The finished surface shall be smooth and uniform.

B. At all locations where new asphalt top course abuts existing asphalt pavement to remain, provide a 4" wide coating of asphalt filler over the asphalt concrete surface, centered on the joint.

C. The finished surface shall be smooth and uniform and shall abut existing pavement and utility covers without humps or depressions.

3.08 PAVEMENT REPAIR

A. Repair all existing pavement damaged during construction of the paving and surfacing work.

B. Meet the original subgrade and finished grade elevations.

C. Match the existing pavement in materials, course thickness and finishes to the satisfaction of the Engineer at no additional cost to the Owner.

3.09 FIELD QUALITY CONTROL OF SUBBASE MATERIALS

A. The standards for all tests shall be as follows:

1. Optimum moisture: Conforming to ASTM D 1557.

2. In-place density: Conforming to ASTM D 1557.

B. The in-place field density tests shall be taken generally as follows:

1. One (1) test will be required for each 1000 square feet of pavement subgrade.

C. The testing agency shall locate the tests and determine their frequency. The tests shall be taken in the pavement subgrade.

D. If any of the in-place field density tests as specified above indicate that the compaction is less than 95%, the extent of the unacceptable compaction shall be clearly established by additional testing.

1. All materials that have failed to meet the compaction requirements shall be removed, refilled or rebackfilled, compacted and retested until the specified compaction requirements are met.

2. All of the corrective work shall be in accordance with the Contract Documents and all costs related to the corrective work and testing shall be paid by the Contractor.

END OF SECTION

SECTION 02765

SEWER CLEANING

PART 1 GENERAL

1.01 SCOPE OF WORK

A. Furnish all labor, materials and equipment necessary for the proper cleaning of existing sewers, manholes and associated appurtenances where depicted on the Contract Drawings.

B. The sewer system to be cleaned (Midland Avenue CSO Transmission Pipeline) is a wet weather flow conveyance and storage conduit. Work shall be scheduled such that sewer cleaning will not occur or interfere with system operation during wet weather events.

C. The Owner has indicated that the depth of sediment and debris in the existing Midland Avenue CSO Transmission Pipeline is approximately 8-inches throughout the approximate 1,200 linear feet of 144-inch diameter PCCP.

1.02 SUBMITTALS

A. Contractor shall submit information detailing the proposed sewer cleaning method(s).

PART 2 PRODUCTS

2.01 MATERIALS

A. High Velocity Hydro-Cleaning Equipment shall have the following:

1. A minimum of 750-ft. of high pressure hose.

2. Two or more high velocity nozzles capable of producing a scouring action from 15 to 45 degrees.

3. A high velocity gun for washing and scouring pipe and manhole walls and floors.

4. Capability of producing flows from a fine spray to a long distance solid stream.

5. A water tank, auxiliary engines and pumps and a hydraulically driven hose reel.

6. Equipment operating controls located above ground.

B. Mechanical cleaning equipment shall be either power buckets or power rodders by the Flexible Tool Division of Rockwell Manufacturing Co. or equal.

1. Bucket machines

a. Shall be furnished with buckets in pairs and with sufficient dragging power to perform the work efficiently.

b. Shall use V-belts for power transmission or have an overload device. No direct drive machines will be permitted.

c. Shall be equipped with a take up drum and a minimum of 750-ft of cable.

2. Power rodding machine

a. Shall either be sectional or continuous

b. Shall hold a minimum of 750-ft of rod.

c. The rod shall be specially treated for the application.

d. The machine shall be fully enclosed and have an automatic safety throwout clutch.

PART 3 EXECUTION

3.01 PERFORMANCE

A. Selection of cleaning equipment shall be based on the conditions of the manhole and lines at the time the work commences.

1. Light cleaning (small amounts of debris existing within the sewer line): Use balls, scooters, high pressure water jetting (maximum of 3 passes) equipment, brushes and swabs.

2. Heavy cleaning (large deposits of debris or heavy root growth existing within the sewer line): Use bucket machines, scrapers and augers. Cleaning which requires more than 3 passes with hydraulic cleaning equipment to achieve acceptable results shall be considered heavy cleaning.

B. Obtain a written authorization from the Engineer prior to conducting any heavy cleaning. Authorization shall be required for each individual sewer reach.

C. Use properly selected equipment to remove all dirt, grease, rock, mineral deposits, root intrusions and other deleterious materials and obstructions that will inhibit proper sewer flow.

D. Sewer cleaning shall begin at the upstream Vacuum Flushing Chamber (VFC-2) and proceed towards the downstream Storage Tank. The Contractor shall prevent intrusion of materials into the Midland Avenue RTF and shall minimize intrusion of materials into the Storage Tank.

E. Protect existing sewer lines from damage or flooding caused by improper use of cleaning equipment. Any damage to the sewers or private/public property served by the sewers shall be repaired at the Contractor's expense.

F. Removal of Materials

1. Remove all solids and semi-solids at the downstream Vacuum Flushing Chamber or Storage Tank.

2. All materials shall be remove from the Vacuum Flushing Chambers whether it be existing debris of debris removed from the sewer line.

G. Disposal of Materials

1. Contractor shall remove from the site and properly dispose of all solids or semi-solids recovered during the cleaning operation.

3.02 FIELD QUALITY CONTROL

A. The Contractor shall perform a television inspection and submit to the Engineer for review prior to initiating the cleaning and again at the completion of cleaning operations. Lines not acceptably clean shall be re-cleaned and re-inspected at no additional cost to the Owner.

B. The Contractor shall monitor the quality of material removed from each sewer. If pieces of broken pipe or clean sand and gravel become apparent, the cleaning operation shall be halted if it is suspected that the sewer is damaged. The Engineer and Owner shall be immediately notified when and why the cleaning operations have been suspended. If the Contractor's cleaning

equipment becomes immobilized or breaks within the sewer, the equipment shall be retrieved at the Contractor's expense. If the retrieval necessitates excavations, the Contractor is responsible for accomplishing the work and restoring the sewer at his own expense. The Contractor shall act immediately to remedy problems created by the cleaning operations which represent a hazard to the general public or the Owner's facilities.

C. The Contractor shall keep printed records of all cleaning performed including the Contractor's name, date, Owner's name and project, manhole location, section cleaned, size, type, and shape of sewer, equipment used and any other pertinent remarks. A copy of the records shall be provide to the Engineer.

END OF SECTION

SECTION 02890

TRAFFIC SIGNS

PART 1 GENERAL

1.01 SUMMARY

A. This section includes fabricating, furnishing, and installing new traffic signs, sign posts, and sign panels in accordance with the Contract Drawings, these specifications, and the directions of the Engineer.

1.02 RELATED SECTIONS

A. Section 02300 - Earthwork

B. Section 03300 - Cast-in-Place Concrete

1.03 REFERENCES

A. Materials and installation shall be in accordance with the latest revisions of the following codes, standards, and specifications, except where more stringent requirements are specified herein:

1. Federal Highway Administration (FHA)

2. New York State Department of Transportation (NYSDOT) Standard Specifications dated January 2, 2002 and all Addenda currently in effect.

3. New York State Department of Transportation (NYSDOT) Standard Sheets, most current version.

4. National "Manual of Uniform Traffic Control Devices" (NMUTCD)and New York State Supplement to NMUTCD.

1.04 SUBMITTALS

A. Submittals shall be submitted in accordance with the provisions set forth in the General Specifications.

B. Submittals shall contain source and supplier of material showing its compliance with specifications and associated standards.

PART 2 PRODUCTS

2.01 MATERIALS

A. Sign panels for ground mounted NMUTCD Codes G & I signs shall be aluminum alloy 0.125 inches thick meeting the requirements of NYSDOT Standard Specifications Subsection 730-01, Aluminum Sign Panels.

B. Sign panels for ground mounted NMUTCD Codes R, P, W, & M signs be aluminum alloy 0.100 inches thick meeting the requirements of NYSDOT Standard Specifications Subsection 730-01.

C. The reflective sheeting materials used on sign panels shall conform to the class (type) and usage requirements described in Table 1 of the NYSDOT Standard Specifications Subsection 730-05.

D. Type A sign supports shall meet the requirements of NYSDOT Standard Specifications Subsection 730-24 and be selected from the NYSDOT Approved List of Type A Sign Supports.

PART 3 EXECUTION

3.01 SIGN CONSTRUCTION

A. Sign panels, and sign posts shall be constructed in accordance with these specifications, plan details, NMUTCD, materials details and the directions of the Owner Representative.

B. Ground mounted signs on Type A Sign Supports shall be constructed with a sign and structure able to withstand the wind loadings as described in NYSDOT Standard Specifications Subsection 645-3.02, Wind Loads.

C. Fabrication of all components of the completed sign shall produce a finished sign installation to the satisfaction of the Owner Representative. Holes may be punched or drilled. Edges shall be smooth and true and free from burrs or ragged breaks.

D. The sign fabricator shall clearly identify and date for each completed sign in accordance with NYSDOT Standard Specifications Subsection 645-2.02. The fabrication date shall be located on the back of the sign panel substrate, at either lower corner.

E. Sign face construction including sign face shape, color, dimensions, characters, symbols, wording, lettering and reflectorization shall be in accordance with the Contract Drawings, the NMUTCD, and all applicables Federal Highway Administration (FHA) Standards.

1. Layout, size and arrangement of sign panels and sign assemblies shall be as shown in the Contract Drawings.

2. Standard sign face layouts for signs are shown in the NMUTCD.

3. Sign face characters and background shall be reflective, but black portions of a sign face shall not be reflective.

4. Characters shall include letters, numerals, route shields, symbols and borders. Characters shall be the size, series and color specified in the NMUTCD and as specified in the plans. Only Type IV or Type V Characters, as appropriate, shall be used. All white legend and border shall be formed with directly applied Type IV Characters.

5. Corner radii and border widths shall be as designated in the NMUTCD. In the event border radii are not otherwise designated, they shall be approximately one eighth of the height of the sign; but shall not exceed 12 inches. In the event border width is not designated, it shall be the same as the stroke width of the major lettering on the sign.

3.02 INSTALLATION

A. The Contractor shall erect new signs and remove existing signs in such a manner that the traveling public is provided all necessary regulatory, warning, and guidance information at all times. It may also be required that certain items, designed in the Contract Drawings or by the Owner Representative, be preformed prior to other items of work.

B. Sign locations shown on the Contract Drawings are approximate and the exact location for each sign will be determined by the Owner Representative in the field.

C. Sign panels, sign support systems, and sign posts shall be erected in accordance with details shown on the Contract Drawings, NYSDOT materials details and as directed by the Owner Representative.

D. Type A Sign Posts shall be used individually or in groups such that the number of posts acting together can resist the moment required.

The actual number and strength of Type A Sign Posts to be installed shall be based on conditions at the final sign location, which shall be determined or approved by the Owner Representative. The Contractor shall either compute the bending moment to be resisted by the Type A Sign Post(s) due to the wind loads indicated in NYSDOT Standard Specifications Subsection 645-3.02, or use the design tables given on the NYSDOT Approved List for Type A sign post Materials Details, to propose an appropriate number and strength of Type A Sign Posts subject to the criteria given below and the approval of the Owner Representative. The Contractor shall submit the approved Materials Details, and any computations, to the Owner Representative, and supply and install the required number of Type A sign posts subject to the following criteria:

1. For signs wider than 30 inches, at least two posts shall be required, except the nominal 30" x 30" diamond panel and the nominal 36-inch wide "YIELD" panel shall require only one post.

2. The maximum number of posts installed within a 7.0-foot path, as described on the Approved Materials Details, shall be complied with.

3. For single flanged channel post installations only, the calculated bending moment be resisted by the post shall be augmented by 25% to adjust for torsional shear.

E. Each sign panel shall be marked in the lower right corner of the back of the panel with the month and year of installation. Markings shall be a minimum of 1 inch high and with either a permanent paint or ink or stamped into the material.

F. All materials and labor shall be inspected in the field. All work of erection shall be subject to the inspection of the Owner Representative, who shall be given all facilities for a thorough inspection of the work. All inspection of the completely erected sign shall be made in the daylight for proper location, line and grade of signs, vertical post alignment, appearance and visibility. The completely erected signs shall also be inspected at night by the Owner Representative for orientation, specular reflection and defects. Each sign shall be inspected day and night for acceptable color and reflectivity.

G. All apparent defects disclosed after day and night inspection shall be corrected by the Contractor to the satisfaction of the Owner Representative.

END OF SECTION

SECTION 02891

RELOCATING TRAFFIC SIGNS

PART 1 GENERAL

1.01 SUMMARY

A. This section includes relocation of existing traffic signs and sign structures as required to complete the work of this project or directed by the Engineer. The sign components shall include sign panels, stringers, vertical brackets, miscellaneous hardware used solely for the support of the sign panels, upright supports, bracing and structures.

1.02 RELATED SECTIONS

A. Section 02300 - Earthwork
B. Section 02890 - Traffic Signs
C. Section 03300 - Cast-in-Place Concrete

1.03 REFERENCES

A. Materials and installation shall be in accordance with the latest revisions of the following codes, standards, and specifications, except where more stringent requirements are specified herein:

1. Federal Highway Administration (FHA)

2. New York State Department of Transportation (NYSDOT) Standard Specifications dated January 2, 1995 with Addenda No. 1 and 2.

3. New York State Department of Transportation (NYSDOT) Standard Sheets, effective letting of January 15, 1998.

4. National "Manual of Uniform Traffic Control Devices" (NMUTCD) and New York State Supplement to NMUTCD.

1.04 SUBMITTALS

A. Submittals shall be submitted in accordance with the provisions set forth in the General Specifications.

B. Submittals shall contain source and supplier of material showing its compliance with specifications and associated standards.

PART 2 PRODUCTS

2.01 MATERIALS

A. All materials used in this work shall meet the requirements of NYSDOT Standard Specifications Subsection 645-2.

PART 3 EXECUTION

3.01 CONSTRUCTION

A. Existing sign panels shall be removed and stockpiled off the ground in a neat and skillful manner by the Contractor to the satisfaction of the Owner Representative, at the site or sites within the project limits as designated by the Owner Representative. Care shall be exercised in removing the sign panels to prevent damage to any part of the reflectorized sign face or characters, or the existing stringers or stiffeners. Any damage shall be repaired or the damaged part replaced to the satisfaction of the Owner Representative at the Contractor's expense.

B. Existing sign posts shall become the property of the Contractor and shall be removed from the work site in a neat and skillful manner.

C. The Contractor shall erect new sign posts and mount the existing sign panels at their current longitudinal locations, or per the NMUTCD, or as directed by the Owner Representative. The requirements of NYSDOT Standard Specifications Subsection 645-3, Construction Details, shall apply to this work.

3.02 INSTALLATION

A. The Contractor shall relocate existing signs in such a manner that the traveling public is provided all necessary regulatory, warning, and guidance information at all times. It may also be required that certain items, designed in the contract documents

or by the Owner Representative, be performed prior to other items of work.

B. The Contractor shall review all signs within the project work limits to ascertain the type and number to be relocated.

C. Sign panels, sign support systems, and sign posts shall be erected in accordance with details shown on the Contract Drawings, NMUTCD, NYSDOT materials details, as directed by the Owner Representative, and the following NYSDOT Standard Sheets:

1. M645-50 Standard Sign Blank Details

2. M645-51 Standard Sign Blank Details

3. M645-52 Standard Sign Blank Details

4. M645-55 Standard Height and Lateral Location for Traffic Signs, Typ. Reg. & Warning Signs Assemb.

5. M645-56 Typical Route Marker Assemblies

6. M645-70 Sign Panel Details for Guide, Information and Other Signs

7. M680-6 Dual Span Wire and Mast Arm Sign Installation Details

8. M680-13R1 Traffic Signal Pole Foundations

9. M680-14R1 Standard Traffic Signal Poles

10. M680-15R1 Standard Traffic Signal Poles

D. Type A Sign Posts shall be used individually or in groups such that the number of posts acting together can resist the moment required.

The actual number and strength of Type A Sign Posts to be installed shall be based on conditions at the final sign location, which shall be determined or approved by the Owner Representative. The Contractor shall either compute the bending moment to be resisted by the Type A Sign Post(s) due to the wind loads indicated in NYSDOT Standard Specifications Subsection 645-3.02, or use the design tables given on the NYSDOT

Approved List for Type A sign post Materials Details, to propose an appropriate number and strength of Type A Sign Posts subject to the criteria given below and the approval of the Owner Representative. The Contractor shall submit the approved Materials Details, and any computations, to the Owner Representative, and supply and install the required number of Type A sign posts subject to the following criteria:

1. For signs wider than 30 inches, at least two posts shall be required, except the nominal 30" x 30" diamond panel and the nominal 36-inch wide "YIELD" panel shall require only one post.

2. The maximum number of posts installed within a 7.0-foot path, as described on the NYSDOT Approved Materials Details, shall be complied with.

3. For single flanged channel post installations only, the calculated bending moment be resisted by the post shall be augmented by 25% to adjust for torsional shear.

E. Each sign panel shall be marked in the lower right corner of the back of the panel with the month and year of installation. Markings shall be a minimum of 1 inch high and with either a permanent paint or ink or stamped into the material.

F. All materials and labor shall be inspected in the field. All work of erection shall be subject to the inspection of the Owner Representative, who shall be given all facilities for a thorough inspection of the work. All inspection of the completely erected sign shall be made in the daylight for proper location, line and grade of signs, vertical post alignment, appearance and visibility. The completely erected signs shall also be inspected at night by the Owner Representative for orientation, specular reflection and defects. Each sign shall be inspected day and night for acceptable color and reflectivity.

G. All apparent defects disclosed after day and night inspection shall be corrected by the Contractor to the satisfaction of the Owner Representative.

END OF SECTION

SECTION 02936

LAWNS

PART 1 - GENERAL

1.01 SUMMARY

A. This Section is subject to the applicable requirements of the Contract Documents.

B. This Section includes the following:

1. Excavation of existing earth and other backfill materials.

2. Imported topsoil.

3. Permeable soil.

4. Seeding materials.

5. Soil amendments.

1.02 RELATED SECTIONS

A. Section 02300 - Earthwork

B. Section 02370 - Erosion and Sediment Control

C. Section 02950 - Planting

1.03 SUBMITTALS

A. Seed

1. Grass Seed: Certification of grass seed from seed vendor for the grass-seed mixture stating the botanical and common name and percentage by weight of each species and variety, and percentage of purity, germination, and weed seed. Include the year of production and date of packaging.

2. Grass seed testing results.

3. Naturalizing Seed Mix and Retention Basin Floor Seed Mix: Certification from seed vendor stating the botanical and common name and percentage by weight of each species and variety, and percentage of purity. Include the year of production and date of packaging.

B. Hydro mulch material certification. Use phosphorus free fertilizer.

C. Imported topsoil and permeable soil: Test results.

D. Soil amendments: Product certification signed by manufacturers certifying that their products comply with specified requirements:

1. Manufacturer's certified analysis for standard products.

E. Planting schedule indicating anticipated dates and locations for each type of seeding.

1.04 QUALITY ASSURANCE

A. Installer Qualifications: Engage an experienced Installer who has completed landscaping work similar in material, design, and extent to that indicated for this Project and with a record of successful grass establishment.

B. Topsoil Analysis: Furnish the topsoil analysis in accordance with Specification Section 02950 - Planting.

C. Soil Amendment: Prepare a soil amendment procedure that will adjust all of the topsoil to be used in construction lawns to a pH of 6.5 if the pH testing indicates a pH other than 6.5

D. Grass Seed Analysis: Employ at no cost to the Owner a qualified independent testing agency to provide analysis of a sample grass seed taken after delivery to the site. The seed mixture shall be tested for seed species and proportions, purity and germination percentages as indicated on Schedules at the end of this Section.

E. Naturalizing Seed Mix and Retention Basin Floor Seed Mix Analysis: Fresh, clean, dry, new-crop seed complying with the Association of Official Seed Analysts' "Rules for Testing Seeds" for purity and germination tolerances. The seed mixture shall be tested for seed species and varieties, proportions by weight as indicated on Schedules at the end of this Section.

F. Conform to American Society of Testing and Materials (ASTM), Standard Specifications and Methods of Testing.

1.05 DELIVERY, STORAGE, AND HANDLING

A. Packaged Materials: Deliver packaged materials in containers showing weight, analysis, and name of manufacturer. Protect materials from deterioration during delivery and while stored at site.

B. Seed: Deliver seed in original sealed, labeled, and undamaged containers.

C. Topsoil: Do not deliver to the site, stockpile or spread muddy or frozen topsoil.

1.06 COORDINATION AND SCHEDULING

A. Seeding Time: Sow grass seed between March 15th and May 15th or between August 15th and September 30th, except as otherwise accepted by the Owner's Representative.

B. Weather Limitations: Proceed with planting only when existing and forecast weather conditions are suitable for work.

1. When drought, excessive moisture or other unsatisfactory conditions prevail, the work shall be stopped. When special conditions warrant a variance to the turf operations, proposed times shall be submitted to the Owner's Representative for approval prior to implementation.

2. Do not place topsoil on subgrade that is frozen, excessively wet, extremely dry or otherwise detrimental to seeding, planting or proper grading.

1.07 MAINTENANCE

A. Begin maintenance of lawns immediately after each area is planted and continue until acceptable lawn is established, but for not less than the following periods:

1. Seeded Lawns: 60 days after date of Substantial Completion.

a. When full maintenance period has not elapsed before end of planting season, or if lawn is not fully established at that time, continue maintenance during next planting season.

B. Maintain and establish lawns by watering, fertilizing, weeding, mowing, trimming, replanting, and other operations. Roll, regrade, and replant bare or eroded areas and remulch to produce a uniformly smooth lawn.

1. Replant bare areas with same materials specified for lawns.

2. Add new mulch in areas where mulch has been disturbed by wind or maintenance operations sufficiently to nullify its purpose. Anchor as required to prevent displacement.

C. Watering: Provide and maintain temporary piping, hoses, and lawn-watering equipment to convey water from sources and to keep lawns uniformly moist to a depth of 4 inches.

1. Lay out temporary lawn-watering system and arrange watering schedule to prevent wilting, puddling, erosion, and displacement of seed or mulch. Lay out temporary watering system to avoid walking over muddy or newly seeded areas.

2. Water lawn at the minimum rate of 1 inch per week.

D. Mow lawns as soon as there is enough top growth to cut with mower set at specified height for principal species planted. Repeat mowing as required to maintain specified height without cutting more than 40 percent of the grass height. Remove no more than 40 percent of grass-leaf growth in initial or subsequent mowings. Do not delay mowing until grass blades bend over and become matted. Do not mow when grass is wet. Schedule initial and subsequent mowings to maintain following grass height:

1. Mow grass from 2 1/2 to 3 inches high.

E. Postfertilization: Apply fertilizer to lawn after first mowing and when grass is dry.

1. Use fertilizer that will provide actual nitrogen of at least 1 lb per 1000 sq. ft. of lawn area.

PART 2 - PRODUCTS

2.01 SEED

A. Seed: Fresh, clean, dry, new-crop seed complying with the Association of Official Seed Analysts' "Rules for Testing Seeds" for purity and germination tolerances.

1. Seed Mixes: Provide seed of species and varieties, proportions by weight, and minimum percentages of purity, and germination as indicated on Schedules at the end of this Section. The maximum percentage of weed seed shall not exceed 0.1% by weight.

2.02 SOIL MATERIALS

A. Topsoil: ASTM D 5268, pH range of 5.5 to 7.5, organic content between 5% and 10%, free of stones 1 inch or larger in any dimension, roots, plants, sods, clay lumps and other extraneous materials harmful to plant growth.

B. Permeable Soil: Provide planting soil, free of stones, debris, roots and woody material over 1 inch in diameter and free of noxious weeds, that contains 35 to 60 percent sand, 30 to 55 percent silt, and 10 to 25 percent clay by volume, is classified as a loam/sand mix, sandy loam, loamy sand, or loam under USDA soil texture classification system, and complies with the following requirements:

1. Permeability of at least 1.0 ft per day.
2. 35 lbs per acre minimum magnesium content
   75 lbs per acre minimum phosphorus (P_2O_5) content
   85 lbs per acre minimum potassium (K_2O) content
3. Less than 500 parts per million soluble salt content
4. pH range of 5.3 to 7.0
5. Organic content of 1.5 to 4.0 percent

2.03 SOIL AMENDMENTS

A. Lime: ASTM C 602, Class T, agricultural limestone containing a minimum 80 percent calcium carbonate equivalent, with a minimum 99 percent passing a No. 8 sieve and a minimum 75 percent passing a No. 60 sieve.

1. Provide lime in the form of dolomitic limestone.

B. Water: Potable.

2.04 FERTILIZER

A. Commercial Fertilizer: Commercial-grade fertilizer of neutral character, consisting of fast- and slow-release nitrogen, 50 percent derived from natural organic sources of urea-form and potassium in the following composition:

1. Composition: Nitrogen and potassium in amounts recommended in soil reports from a qualified soil-testing agency.

2. Use of fertilizers with more than 0% content of phosphorus is not allowed.

2.05 MULCHES

A. Organic Mulch: Organic mulch, free from deleterious materials, consisting of one of the following:

1. Straw Mulch: Provide air-dry, clean, mildew- and seed-free, salt hay or threshed straw of wheat, rye, oats, or barley.

2. Fiber Mulch: Biodegradable dyed-wood cellulose-fiber mulch, nontoxic, free of plant growth- or germination-inhibitors, with maximum moisture content of 15% and a pH range of 4.5 to 6.5.

B. Asphalt Emulsion Tackifier: Asphalt emulsion, ASTM D 977, Grade SS-1, nontoxic and free of plant growth- or germination-inhibitors.

C. Nonasphaltic Tackifier: Colloidal tackifier recommended by fiber-mulch manufacturer for slurry application, nontoxic and free of plant growth- or germination-inhibitors.

2.06 EROSION CONTROL BLANKETS

A. Blankets: Biodegradable twisted jute or coir-spun mesh, 0.92 lb per sq. yd minimum, with 50 to 65 percent of open area. Include manufacturer's recommended wire staples.

B. Manufacturers: Subject to compliance with requirements, provide products by one of the following:

1. North American Green.
2. East Coast Erosion Blankets.
3. Propex Geosynthetics, BP Amoco Group.

PART 3 - EXECUTION

3.01 EXAMINATION

A. Examine areas to receive grass seed for compliance with requirements and for conditions affecting performance of work of this Section. Do not proceed with installation until unsatisfactory conditions have been corrected.

3.02 PREPARATION

A. Protect structures, utilities, sidewalks, pavements, and other facilities, trees, shrubs, and plantings from damage caused by planting operations.

1. Protect adjacent and adjoining areas from hydroseed overspraying.

B. Provide erosion-control measures to prevent erosion or displacement of soils and discharge of soil-bearing water runoff or airborne dust to adjacent properties and walkways. Refer to Section 02370, Erosion and Sediment Control.

3.03 LAWN PLANTING PREPARATION

A. Limit subsoil preparation to areas that will be planted in the immediate future.

B. Loosen subsoil to a minimum depth of 2 inches. Remove stones larger than 1-1/2 inches in any dimension and sticks, roots, rubbish, and other extraneous matter.

1. In areas of crushed stone backfill, excavate crushed stone to allow for spreading of topsoil. Provide topsoil layer of 12 inches minimum.

C. Spread topsoil to minimum depth of 6 inches and as required to meet thickness, grades, and elevations shown, after light rolling and natural settlement. Do not spread if topsoil or subgrade is frozen.

1. Place approximately 1/2 the thickness of topsoil required. Work into top of loosened subgrade to

create a transition layer and then place remainder of topsoil.

D. Preparation of Unchanged Grades: Where lawns are to be planted in areas unaltered or undisturbed by excavating, grading, or surface soil stripping operations, prepare soil as follows:

1. Remove and dispose of existing grass, vegetation, and turf. Do not turn over into soil being prepared for lawns.

2. Till surface soil to a depth of at least 6 inches. Apply required soil amendments and initial fertilizers and mix thoroughly into top 4 inches of soil. Trim high areas and fill in depressions. Till soil to a homogenous mixture of fine texture.

3. Clean surface soil of roots, plants, sod, stones, clay lumps, and other extraneous materials harmful to plant growth.

4. Remove waste material, including grass, vegetation, and turf, and legally dispose of it off the Owner's property.

E. Bioretention Areas: Perform permeable soil spreading operations only during dry weather. Place permeable soil in lifts up to 12 inches, loosely compact by lightly tamping with a backhoe bucket. Conform to New York State Stormwater Management Design Manual recommendations for Type 0-1 water quality swales

F. Grade lawn areas to a smooth, even surface with loose, uniformly fine texture. Roll and rake, remove ridges, and fill depressions to meet finish grades. Limit fine grading to areas that can be planted in the immediate future. Remove trash, debris, stones larger than 1-1/2 inches in any dimension, and other objects that may interfere with planting or maintenance operations.

G. Moisten prepared lawn areas before planting when soil is dry. Water thoroughly and allow surface to dry before planting. Do not create muddy soil.

H. Restore prepared areas if eroded or otherwise disturbed after fine grading and before planting.

3.04 EROSION CONTROL BLANKETS

A. Install erosion control blankets on slopes with gradient 3:1 or steeper.

B. For permanent installation prepare soil before installing blankets, including any necessary application of lime, fertilizer, and seed.

C. Spread erosion control blankets over prepared soil starting from the top of slope. Anchor each blanket in 6 inches deep and 6 inches wide trench, with 12 inches of blanket extended beyond trench up-slope to be folded over the filled trench. Anchor blanket in trench with a row of stakes spaced 12 inches apart. Backfill trench and compact fill material. Apply seed to compacted soil. Fold blanket over compacted soil and secure it with a row of stakes spaced 12 inches apart.

D. Roll blankets down or horizontally across the slope. Fasten blankets to soil surface by placing stakes at locations indicated or recommended by manufacturer. Overlap parallel blankets 2 inches to 5 inches as recommended by manufacturer. Overlap consecutive blankets spliced down the slope 3 inches "shingle style", end over end. Stake through overlapped areas 12 inches apart across entire blanket width.

3.05 SEEDING NEW LAWNS

A. Sow seed with a spreader or a seeding machine. Do not broadcast or drop seed when wind velocity exceeds 5 mph. Evenly distribute seed by sowing equal quantities in 2 directions at right angles to each other.

1. Do not use wet seed or seed that is moldy or otherwise damaged in transit or storage.

B. Sow seed at the following rates:

1. Lawn Seed Mix Seeding Rate: 4 to 6 lb per 1000 sq. ft.

2. Naturalizing Mix Seeding Rate: 3 to 5 lb per 1000 sq. ft.

3. Retention Basin Floor Seed Mix: 1/2 to 1 lb per 1000 sq. ft.

C. Rake seed lightly into top 1/8 inch of topsoil, roll lightly, and water with fine spray.

D. Protect seeded slopes exceeding 3:1 against erosion with erosion-control blankets, as specified in this section.

E. Protect seeded areas with slopes less than 1:6 against erosion by spreading straw mulch after completion of seeding operations. Spread uniformly at a minimum rate of 2 tons per acre to form a continuous blanket 1-1/2 inches loose depth over seeded areas. Spread by hand, blower, or other suitable equipment.

1. Anchor straw mulch by spraying with asphalt-emulsion tackifier at the rate of 10 to 13 gal. per 1000 sq. ft. Take precautions to prevent damage or staining of structures or other plantings adjacent to mulched areas. Immediately clean damaged or stained areas.

3.06 HYDROSEEDING NEW LAWNS (Contractor's Option)

A. Hydroseeding: Mix specified seed, fertilizer, and fiber mulch in water, using equipment specifically designed for hydroseed application. Continue mixing until uniformly blended into homogenous slurry suitable for hydraulic application.

1. Mix slurry with nonasphaltic tackifier.

2. Apply slurry uniformly to all areas to be seeded in a 1-step process. Apply mulch at the minimum rate of 1500 lb per acre dry weight but not less than the rate required to obtain specified seed-sowing rate.

3.07 RECONDITIONING LAWNS

A. Recondition existing lawn areas damaged by Contractor's operations, including storage of materials or equipment and movement of vehicles. Also recondition lawn areas where settlement or washouts occur or where minor regrading is required.

B. Remove sod and vegetation from diseased or unsatisfactory lawn areas; do not bury into soil. Remove topsoil containing foreign materials resulting from Contractor's operations, including oil drippings,

fuel spills, stone, gravel, and other construction materials, and replace with new topsoil.

C. Where substantial lawn remains, mow, de-thatch, core aerate, and rake. Remove weeds before seeding. Do not use herbicides.

D. Remove waste and foreign materials, including weeds, soil cores, grass, vegetation, and turf, and legally dispose of it off the Owner's property.

E. Till stripped, bare, and compacted areas thoroughly to a depth of 6 inches.

F. Apply required soil amendments and initial fertilizers and mix thoroughly into top 4 inches of soil. Provide new planting soil as required to fill low spots and meet new finish grades.

G. Apply seed and protect with straw mulch as required for new lawns.

H. Water newly planted areas and keep moist until new grass is established.

3.08 SATISFACTORY LAWN

A. Seeded lawns will be satisfactory provided requirements, including maintenance, have been met and a healthy, uniform, close stand of grass is established, free of weeds, bare spots exceeding 5 by 5 inches, and surface irregularities.

B. Replant lawns that do not meet requirements and continue maintenance until lawns are satisfactory.

3.09 CLEANUP AND PROTECTION

A. Promptly remove soil and debris created by lawn work from paved areas. Clean wheels of vehicles before leaving site to avoid tracking soil onto surface of roads, walks, or other paved areas.

B. Erect barricades and warning signs as required to protect newly planted areas from traffic. Maintain barricades throughout maintenance period until lawn is established.

3.10 TOPSOIL AMENDMENTS SCHEDULE

A. Lawns: Provide topsoil amendments in not less than the following quantities:

1. Weight of lime per 1000 sq. ft.: 50 lb.

2. Weight of commercial fertilizer per 1000 sq. ft.: 20 lb

3.11 SEED MIXTURES SCHEDULE

A. Grass Seed Mix: Provide certified grass-seed blends or mixes, proportioned by weight, as follows:

Proportion	Name	Min. Pct. Germ.	Min. Pct. Pure Seed
45 %	Kentucky Bluegrass (Poa pratensis) varieties: Adelphi, Eclipse, Merit	80	95
25 %	Fine Fescue (Festuca rubra) varieties: Reliant (hard type), Jamestown (chewings type)	85	98
30 %	Perennial Ryegrass	90	98

B. Naturalizing Seed Mix: Provide certified seed mix, proportioned by weight, as follows:

Proportion	Name	Min. Pct. Germ.	Min. Pct. Pure Sd.
30 %	Perennial Ryegrass "Pennant" (Lolium perenne)	80	85
20 %	Tall Fescue (Festuca ovina variety)	85	98
20 %	Redtop (Agrostis alba)	85	92
10 %	Birdsfoot Trefoil (Lotus corniculatus)	85	92
10 %	Perennial Sweet Pea (Lathyrus latifolia)	85	92
10 %	Crimson Clover (Trifolium hirtum)	85	92

C. Retention Basin Floor Seed Mix: Provide certified seed mix ERNMX-126, as provided by Ernst Conservation Seeds, LLP, or approved equivalent.

END OF SECTION

SECTION 02950

PLANTING

PART 1 - GENERAL

1.01 SUMMARY

A. A. This Section is subject to the applicable requirements of the Contract Documents.

B. This Section includes the following:

1. Trees.

2. Shrubs and vines.

3. Imported topsoil and soil amendments.

4. Fertilizers and mulches.

5. Stakes and guys.

1.02 RELATED SECTIONS

A. Section 02300 - Earthwork

B. Section 02936 - Lawns

1.03 SUBMITTALS

A. Product certificates signed by manufacturers certifying that their products comply with specified requirements.

1. Manufacturer's certified analysis for standard products.

2. Analysis for other materials by a recognized laboratory made according to methods established by the Association of Official Analytical Chemists, where applicable.

3. Label data substantiating that plants, trees, shrubs, and planting materials comply with specified requirements.

B. Samples of each of the following:

1. 5 lb of organic mulch required for Project, in labeled plastic bags.

D. Material test reports from qualified independent testing agency indicating and interpreting test results relative to compliance of the following materials with requirements indicated.

1. Analysis of imported topsoil.

E. Planting schedule indicating anticipated dates and locations for each type of planting.

F. Maintenance instructions recommending procedures to be established by Owner for maintenance of landscaping during an entire year. Submit before expiration of required maintenance periods.

1.04 QUALITY ASSURANCE

A. Installer Qualifications: Engage an experienced Installer who has completed landscaping work similar in material, design, and extent to that indicated for this Project and with a record of successful landscape establishment.

B. Provide quality, size, genus, species, and variety of trees and shrubs indicated, complying with applicable requirements of ANSI Z60.1 "American Standard for Nursery Stock." Provide healthy, vigorous stock, grown in recognized nursery in accordance with good horticultural practice and free of disease, insects, eggs, larvae and defects such as knots, sun-scald, injuries, abrasions, or disfigurement.

C. Topsoil Analysis: Engage at no cost to the Owner a qualified independent soil-testing agency to provide a soil analysis stating percentages of organic matter, inorganic matter (silt, clay, and sand), deleterious material, pH, and mineral and plant-nutrient content of topsoil with recommendations as to quantities of nitrogen, phosphorus, and potash nutrients and any limestone, aluminum sulfate, or other soil amendments to be added to produce a satisfactory topsoil. Include topsoil source information.

D. Measurements: Measure trees and shrubs according to ANSI Z60.1 with branches and trunks or canes in their normal position. Do not prune to obtain required sizes. Take caliper measurements 6 inches above ground for trees up to 4-inch caliper size, and 12 inches above ground for larger sizes. Measure main body of

tree or shrub for height and spread; do not measure branches or roots tip-to-tip.

1.05 DELIVERY, STORAGE, AND HANDLING

A. Packaged Materials: Deliver packaged materials in containers showing weight, analysis, and name of manufacturer. Protect materials from deterioration during delivery and while stored at site.

B. Trees and Shrubs: Deliver freshly dug trees and shrubs. Do not prune before delivery, except as approved by Architect. Protect bark, branches, and root systems from sun scald, drying, sweating, whipping, and other handling and tying damage. Do not bend or bind-tie trees or shrubs in such a manner as to destroy natural shape. Provide protective covering during delivery. Do not drop trees and shrubs during delivery.

1. Immediately after digging bare-root stock, pack root system in wet straw, hay, or other suitable material to keep root system moist until planting.

C. Handle balled and burlapped stock by the root ball.

D. Deliver trees, shrubs, ground covers, and plants after preparations for planting have been completed and install immediately. If planting is delayed more than 6 hours after delivery, set planting materials in shade, protect from weather and mechanical damage, and keep roots moist.

1. Set balled stock on ground and cover ball with soil, peat moss, sawdust, or other acceptable material.

2. Do not remove container-grown stock from containers before time of planting.

3. Water root systems of trees and shrubs stored on site with a fine-mist spray. Water as often as necessary to maintain root systems in a moist condition.

1.06 PROJECT CONDITIONS

A. Utilities: Determine location of above grade and underground utilities and perform work in a manner which will avoid damage. Hand excavate, as required.

Maintain grade stakes set by others until removal is mutually agreed upon by parties concerned.

B. Excavation: When conditions detrimental to plant growth are encountered, such as rubble fill, adverse drainage conditions, or obstructions, notify Architect before planting.

1.07 COORDINATION AND SCHEDULING

A. Coordinate installation of planting materials during normal planting seasons for each type of plant material required.

1.08 WARRANTY

A. General Warranty: The special warranty specified in this Article shall not deprive the Owner of other rights the Owner may have under other provisions of the Contract Documents and shall be in addition to, and run concurrent with, other warranties made by the Contractor under requirements of the Contract Documents.

B. Special Warranty: Warrant the following living planting materials for a period of one year after date of Substantial Completion, against defects including death and unsatisfactory growth, except for defects resulting from lack of adequate maintenance, neglect, or abuse by Owner, abnormal weather conditions unusual for warranty period, or incidents that are beyond Contractor's control.

1. Trees.

2. Shrubs and vines.

C. Remove and replace dead planting materials immediately unless required to plant in the succeeding planting season.

D. Replace planting materials that are more than 25 percent dead or in an unhealthy condition at end of warranty period.

E. A limit of one replacement of each plant material will be required, except for losses or replacements due to failure to comply with requirements.

1.09 PLANTING MAINTENANCE

A. Maintain plants by pruning, cultivating, watering, weeding, fertilizing, restoring planting saucers, tightening and repairing stakes and guy supports, and resetting to proper grades or vertical position, as required to establish healthy, viable plantings. Spray as required to keep trees and shrubs free of insects and disease. Restore or replace damaged tree wrappings. Maintain trees and shrubs for the following period:

1. Maintenance Period: 12 months following Substantial Completion.

PART 2 - PRODUCTS

2.01 TREE AND SHRUB MATERIAL

A. General: Furnish nursery-grown trees and shrubs conforming to ANSI Z60.1, with healthy root systems developed by transplanting or root pruning. Provide well-shaped, fully-branched, healthy, vigorous stock free of disease, insects, eggs, larvae, and defects such as knots, sun scald, injuries, abrasions, and disfigurement.

B. Grade: Provide trees and shrubs of sizes and grades conforming to ANSI Z60.1 for type of trees and shrubs required. Trees and shrubs of a larger size may be used if acceptable to Architect, with a proportionate increase in size of roots or balls.

C. Label each tree and shrub with securely attached, waterproof tag bearing legible designation of botanical and common name.

2.02 DECIDUOUS TREES

A. Shade Trees: Single-stem trees with straight trunk, well-balanced crown, and intact leader, of height and caliper indicated, conforming to ANSI Z60.1 for type of trees required.

B. Small Trees: Small upright or spreading type, branched or pruned naturally according to species and type, and with relationship of caliper, height, and branching recommended by ANSI Z60.1.

C. Provide balled and burlapped trees.

2.03 SHRUBS AND VINES

A. Form and Size: Shrubs with not less than the minimum number of canes required by and measured according to ANSI Z60.1 for type, shape, and height of shrub.

B. Provide balled and burlapped or container grown shrubs.

C. Priovide container grown vines.

2.04 TOPSOIL

A. Topsoil: ASTM D 5268, pH range of 5.5 to 7.5, organic content between 5% and 10%, free of stones 1 inch or larger in any dimension, roots, plants, sods, clay lumps and other extraneous materials harmful to plant growth.

1. Topsoil Source: Amend existing soil stockpiled on the site to produce topsoil. Supplement with imported topsoil when required. Obtain topsoil from naturally well-drained sites where topsoil occurs at least 4 inches deep; do not obtain from bogs or marshes.

2.05 SOIL AMENDMENTS

A. Peat Humus: Finely divided or granular texture, with a pH range of 6 to 7.5, composed of partially decomposed moss peat (other than sphagnum), peat humus, or reed-sedge peat.

D. Manure: Well-rotted, unleached stable or cattle manure containing not more than 25 percent by volume of straw, sawdust, or other bedding materials; free of toxic substances, stones, sticks, soil, weed seed, and material harmful to plant growth.

E. Water: Potable.

2.06 FERTILIZER

A. Commercial Fertilizer: Commercial-grade complete fertilizer of neutral character, consisting of fast- and slow-release nitrogen, 50 percent derived from natural organic sources of urea-form, phosphorous, and potassium in the following composition:

1. Composition for Trees and Shrubs: not less than 5 percent nitrogen, 5 percent phosphorous, and 5 percent potassium, by weight.

2. Composition based on soil reports: Nitrogen, phosphorous, and potassium in amounts recommended in soil reports from a qualified soil-testing agency.

2.07 MULCH

A. Organic Mulch: Organic mulch, free from deleterious materials and suitable as a top dressing of trees and shrubs, consisting of one of the following:

1. Shredded pine bark chips.

2.08 STAKES AND GUYS

A. Upright and Guy Stakes: Rough-sawn, sound, new hardwood, free of knots, holes, cross grain, and other defects, 2 by 2 inches by 84 inches long, pointed at one end.

B. Guy and Tie Wire: ASTM A 641, Class 1, galvanized-steel wire, 2-strand, twisted, 0.106 inch in diameter.

C. Guy Cable: 5-strand, 3/16-inch diameter, galvanized-steel cable, with zinc-coated turn buckles, 3-inch-long minimum, with two 3/8-inch- galvanized eyebolts.

D. Hose Chafing Guard: Reinforced rubber or plastic hose at least 1/2 inch in diameter, black, cut to lengths required to protect tree trunks from damage.

E. Flags: Standard surveyor's plastic flagging tape, white, 6 inches long.

2.09 MISCELLANEOUS MATERIALS

A. Antidesiccant: Water-insoluble emulsion, permeable moisture retarder, film forming, for trees and shrubs. Deliver in original, sealed, and fully labeled containers and mix according to manufacturer's instructions.

B. Trunk-Wrap Tape: Two layers of crinkled paper cemented together with bituminous material, 4 inches wide minimum, with stretch factor of 33 percent.

C. Watering Bags: TreeGator or approved equivalent 20 gal. watering bags with reinforced cording and drip holes. Use one bag per each tree or shrub.

PART 3 - EXECUTION

3.01 EXAMINATION

A. Examine areas to receive landscaping for compliance with requirements and for conditions affecting performance of work of this Section. Do not proceed with installation until unsatisfactory conditions have been corrected.

3.02 PREPARATION

A. Lay out individual tree and shrub locations and areas for multiple plantings. Stake locations, outline areas, and secure Architect's approval before the start of planting work. Make minor adjustments as may be required.

3.03 PLANTING SOIL PREPARATION

A. Before mixing, clean topsoil of roots, plants, sods, stones, clay lumps, and other extraneous materials harmful to plant growth.

B. Mix soil amendments and fertilizers with topsoil at rates indicated. Delay mixing fertilizer if planting does not follow placing of planting soil within a few days.

1. A "Planting Soil Amendments Schedule" is included at the end of this Section.

C. For tree pit or trench backfill, mix planting soil before backfilling and stockpile at site.

D. For planting beds, mix planting soil either prior to planting or apply on surface of topsoil and mix thoroughly before planting.

1. Mix peat humus or manure with dry soil prior to mixing fertilizer.

2. Remove waste material, including grass, vegetation, and turf, and legally dispose of it off the Owner's property.

3.04 PLANTING BED PREPARATION

A. Loosen subgrade of planting bed areas to a minimum depth of 6 inches. Remove stones larger than 1-1/2

inches in any dimension and sticks, roots, rubbish, and other extraneous materials.

1. In areas of crushed stone backfill, compact minimum 12" of topsoil below root ball.

B. Spread planting soil mixture to depth required to meet thickness, grades, and elevations shown, after light rolling and natural settlement. Place approximately 1/2 the thickness of planting soil mixture required. Work into top of loosened subgrade to create a transition layer and then place remainder of planting soil mixture.

C. Till soil in beds to a minimum depth of 8 inches and mix with specified soil amendments and fertilizers.

D. Remove soil to a minimum depth of 8 inches and replace with prepared planting soil mixture.

3.05 EXCAVATION FOR TREES AND SHRUBS

A. Pits and Trenches: Excavate with vertical sides and with bottom of excavation slightly raised at center to assist drainage. Loosen hard subsoil in bottom of excavation.

1. Balled and Burlapped Trees and Shrubs: Excavate approximately 3 times as wide as ball diameter and equal to ball depth.

2. Container-Grown Shrubs: Excavate approximately 3 times as wide as container's diameter and equal to container's depth, cut perimeter roots with sharp knife.

3. In areas of crushed stone backfill, excavate crushed stone minimum 5 times as wide as ball or container diameter and 12" minimum deeper than depth of a root ball.

B. Dispose of subsoil removed from landscape excavations. Do not mix with planting soil or use as backfill.

C. Obstructions: Notify Architect if unexpected rock or obstructions detrimental to trees or shrubs are encountered in excavations.

1. Hardpan Layer: Drill 6-inch-diameter holes into free-draining strata or to a depth of 10 feet,

whichever is less, and backfill with free-draining material.

D. Drainage: Notify Architect if subsoil conditions evidence unexpected water seepage or retention in tree or shrub pits.

E. Fill excavations with water and allow to percolate out, before positioning trees and shrubs.

3.06 PLANTING TREES, SHRUBS AND VINES

A. Set balled and burlapped stock plumb and in center of pit or trench with top of ball raised above adjacent finish grades as indicated.

1. Place stock on bottom of planting pit.

2. Remove burlap and wire baskets from tops of balls and partially from sides, but do not remove from under balls. Remove pallets, if any, before setting. Do not use planting stock if ball is cracked or broken before or during planting operation.

3. Place backfill around ball in layers, tamping to settle backfill and eliminate voids and air pockets. When pit is approximately 1/2 backfilled, water thoroughly before placing remainder of backfill. Repeat watering until no more is absorbed. Water again after placing and tamping final layer of backfill.

B. Set container-grown stock plumb and in center of pit or trench with top of ball raised above adjacent finish grades as indicated.

1. Carefully remove containers so as not to damage root balls.

2. Place stock on bottom of planting pit.

3. Place backfill around ball in layers, tamping to settle backfill and eliminate voids and air pockets. When pit is approximately 1/2 backfilled, water thoroughly before placing remainder of backfill. Repeat watering until no more is absorbed. Water again after placing and tamping final layer of backfill.

C. Dish and tamp top of backfill to form a 3-inch- high mound around the rim of the pit. Do not cover top of root ball with backfill.

D. Wrap trees of 2-inch caliper and larger with trunk-wrap tape. Start at base of trunk and spiral cover trunk to height of first branches. Overlap wrap, exposing half the width, and securely attach without causing girdling. Inspect tree trunks for injury, improper pruning, and insect infestation and take corrective measures required before wrapping.

3.07 TREE AND SHRUB PRUNING

A. Prune, thin, and shape trees and shrubs according to standard horticultural practice. Prune trees to retain required height and spread. Do not cut tree leaders; remove only injured or dead branches from flowering trees. Prune shrubs to retain natural character. Shrub sizes indicated are size after pruning.

3.08 TREE AND SHRUB GUYING AND STAKING

A. Upright Staking and Tying: Stake trees of 2- through 5-inch caliper. Stake trees of less than 2-inch caliper only as required to prevent wind tip-out. Use a minimum of 2 stakes of length required to penetrate at least 18 inches below bottom of backfilled excavation and to extend at least 60 inches above grade. Set vertical stakes and space to avoid penetrating balls or root masses. Support trees with 2 strands of tie wire encased in hose sections at contact points with tree trunk. Allow enough slack to avoid rigid restraint of tree.

B. Guying and Staking: Guy and stake trees exceeding 14 feet and more than 3-inch caliper unless otherwise indicated. Securely attach no fewer than 3 guys to stakes 30 inches long, driven to grade. Attach flags to each guy wire, 30 inches above finish grade.

3.09 MULCHING

A. Mulch backfilled surfaces of pits, trenches, planted areas, and other areas indicated.

B. Organic Mulch: Apply the following average thickness of organic mulch and finish level with adjacent finish grades. Do not place mulch against trunks or stems.

1. Thickness: 2 inches.

3.10 DISPOSAL OF SURPLUS AND WASTE MATERIALS

A. Disposal: Remove surplus soil and waste material, including excess subsoil, unsuitable soil, trash, and debris, and legally dispose of it off the Owner's property.

3.11 PLANTING SOIL AMENDMENTS SCHEDULE

A. Tree and Shrub Pits or Trenches: Provide soil amendments in not less than the following quantities:

1. Ratio of loose peat humus to topsoil by volume: 2 parts.

2. Weight of commercial fertilizer per cu. ft.: ½ lbs.

END OF SECTION

SECTION 03100

CONCRETE FORMWORK

PART 1 GENERAL

1.01 SECTION INCLUDES

A. Formwork for cast-in place concrete.

B. Form hardware, ties, etc.

C. Form removal.

1.02 RELATED SECTIONS

A. Section 03250 - CONCRETE JOINTS AND ACCESSORIES
B. Section 03350 - CONCRETE FINISHES
C. Section 03370 - CONCRETE CURING AND PROTECTION

1.03 REFERENCES

A. The publications listed below form a part of these specifications.

ACI 301	Specifications for Structural Concrete Buildings
ACI 347	Recommended Practice for Concrete Formwork
ASTM A653	Steel Sheet, Zinc Coated

1.04 SUBMITTALS

A. Submit single-page catalog cuts showing the types of form ties with and without waterstops to be used.

1.05 DELIVERY, STORAGE, AND HANDLING

A. Deliver form and accessory materials to site in an undamaged condition. Defective or damaged materials shall not be used.

PART 2 PRODUCTS

2.01 MATERIALS

A. Form materials shall be new wood, new plywood, or steel.

B. The Contractor shall not use poor quality or used forms that will make a rubbed finish difficult to produce.

Reference Section 03350. Therefore, worn, used forms will not be allowed on exposed work.

C. The Contractor shall seal formwork by gasketing and caulking at joints and form ties to prevent leakage on the preceding placement below or adjacent. Caulk shall be of a type compatible with the release agent.

D. Forms for exposed surfaces shall be coated with a release agent which will not stain concrete, absorb moisture, or reduce the bonding characteristics of additional concrete coatings. Use The Euclid Chemical Company "Form-Eze Natural," BASF Chemical Company "Cast-Off," W.R. Meadows, Inc. "DuoGard," or equal.

E. Form Ties

1. Form ties shall leave no metal closer than 1-inch to the surface of the finished concrete.

2. The end of the tie hole shall be cone shaped for sealing with plug mortar per Section 03350.

3. Ties used for watertight structures shall have a waterstop.

F. Joints for interruptions in concrete placement shall be per Section 03250.

G. Curved forms shall be utilized for constructing circular walls.

PART 3 EXECUTION

3.01 ERECTION-INSTALLATION-APPLICATION

A. Earth cut forms shall not be used. All footings, etc., shall be formed unless specifically shown otherwise on the Drawings.

B. Forms shall be substantial and rigid, sufficiently tight to prevent leakage of laitance and properly braced and tied to maintain position and shape under the weight and pressure of the newly placed concrete. In particular, all joints between adjacent form panels shall be backed by a waler or stud.

Form surfaces shall be smooth and shall be removable in sections, such that no prying against the faces of the new concrete is necessary.

Inspection and cleanout openings shall be provided as required.

Design, engineering, and construction of formwork shall be the responsibility of the Contractor and must achieve the desired end results.

C. All exposed concrete edges shall be formed to provide a 3/4-inch by 3/4-inch chamfer.

D. Apply form release agent on formwork in accordance with manufacturer's recommendations. Apply prior to placement of reinforcing steel, anchoring devices, and embedded items. Do not apply form release agent where concrete surfaces will receive special finishes which are affected by agent.

E. Form Hardware - Tie layout shall be in a neat pattern when finished concrete is exposed.

F. Provide formed openings where required for items to be embedded in or passing through concrete work.

Locate and set in place items which will be cast directly into concrete.

Coordinate work of other sections in forming and placing openings, slots, reglets, recesses, chases, sleeves, bolts, anchors, and other inserts.

G. Clean and vacuum formed cavities of debris prior to placing concrete.

Flush with water or use compressed air to remove remaining foreign matter. Ensure that water and debris drain to exterior through cleanout ports.

H. During cold weather, remove ice and snow from within forms. Do not use water to clean out forms, unless formwork and concrete construction proceed within heated enclosure. De-icing salts will not be permitted. Reference Section 03370.

TOLERANCES FOR FORMED SURFACES*

1.	**Variation from plumb:**	
	a. In the lines and surfaces of columns, piers, walls, etc.:	
	• In any 10 feet of height	1/4 inch
	• Maximum for the entire height if >40 feet	1 inch
	b. For exposed corner columns, wall corners, control joint grooves, and other conspicuous vertical lines:	
	• In any 20 feet of height	1/4 inch
	• Maximum for the entire height if >20 feet	1/2 inch
2.	**Variation from level or from grades specified:**	
	a. In slab soffits, ceilings and beam soffits, measured before removal of supporting shores:	
	• In any 10 feet of length	1/4 inch
	• In any bay or in any 20 feet of length	3/8 inch
	• Maximum for the entire length if >40 feet	3/4 inch
	b. At top of walls and in exposed lintels, sills, parapets, grooves, and other conspicuous horizontal lines:	
	• In any bay or in 20 feet of length	1/4 inch
	• Maximum for the entire length if >40 feet	1/2 inch
3.	**Variation of the linear building lines from position in plan and related position of columns, walls, and partitions:**	
	• In any bay	1/2 inch
	• In any 20 feet of length	1/2 inch
	• Maximum for the entire length	1 inch
4.	**Variation in the sizes and location of sleeves, floor openings, and wall openings:**	±1/4 inch
5.	**Variation in cross-sectional dimensions of columns and beams and in the thickness of slabs and walls:**	-1/4 inch +1/2 inch
6.	**Footings:**	
	a. Variations in dimensions in plan:	-1/2 inch +2 inches
	b. Misplacement or eccentricity:	
	• 2 percent of the footing width in the direction of misplacement but not more than 2 inches	
	c. Thickness:	
	• Decrease in specified thickness	5 percent
	• Increase in specified thickness:	
	• No limit but increased thickness must be maintained for min. 5'-0" length	

*Tolerances apply to concrete dimensions only, not to positioning of reinforcing steel or embedded items.

3.02 FIELD QUALITY CONTROL

A. Prior to placing concrete, the Contractor shall inspect erected formwork, shoring, and bracing to ensure that work is in accordance with formwork design, and that supports, fastenings, wedges, ties, and items are secure.

3.03 FORM REMOVAL

A. Forms and supports shall remain undisturbed until the concrete has attained sufficient strength to support its own weight in addition to any contemplated loads (temporary or permanent) that may be placed upon it during subsequent work. In no event shall forms be loosened or removed prior to 24 hours' wet cure time. Re-shore at midspan where necessary.

B. The Contractor shall assume full responsibility for the strength of all components from which forms are removed.

C. Non-structural forms such as beam side forms, column forms, and wall forms may be removed at any time after 24 hours, provided that stripping does not damage surfaces and such action does not endanger any part of the structure.

D. No structural forms supporting slabs or beams shall be removed in less than 14 days or prior to attaining at least 80 percent of the required design strength after placing of concrete. Reference Section 03370.

Immediately reshore all concrete required to support formwork for subsequent concrete placement. Any slab to be cast shall be shored downward.

END OF SECTION

SECTION 03200

CONCRETE REINFORCEMENT

PART 1 GENERAL

1.01 SECTION INCLUDES

A. Reinforcing steel bars.

B. Welded wire reinforcement.

C. Threaded rebar splicing system.

D. Bar supports.

1.02 RELATED SECTIONS

A. Section 03250 - CONCRETE JOINTS AND ACCESSORIES
B. Section 03300 - CAST-IN-PLACE CONCRETE

1.03 REFERENCES

The publications listed below form a part of these specifications.

A. American Concrete Institute

ACI 301	Specifications for Structural Concrete Buildings
ACI 315	Details and Detailing of Concrete Reinforcement
ACI 315R	Manual of Engineering and Placing Drawings for Reinforced Concrete Structures
ACI 318	Building Code Requirements for Structural Concrete
ACI 350	Environmental Engineering Concrete Structures

B. American Society for Testing and Materials

ASTM A185	Steel Welded Wire Reinforcement, Plain, for Concrete
ASTM A497	Steel Welded Wire Reinforcement, Deformed, for Concrete
ASTM A615	Deformed and Plain Billet Steel Bars for Concrete Reinforcement
ASTM E329	Recommended Practice for Inspection and Testing Agencies for Concrete, Steel and Bituminous Materials as Used in Construction

C. Concrete Reinforcing Steel Institute

CRSI 63	Recommended Practice for Placing Reinforcing Bars

D. American Welding Society

AWS D12.1	Reinforcing Steel Welding Code for Reinforcing Steel

1.04 SUBMITTALS

A. Reinforcing Steel - Submit shop drawings in accordance with ACI 301, ACI 315, and ACI 315R, as modified below.

1. Shop drawings shall be clearly drawn and show enough details to locate every bar without the need to refer to the Contract Drawings. Photocopies of Contract Drawings, in whole or in part, will not be acceptable.

2. All joint locations, bar splice locations, and wall/slab openings shall be shown on shop drawings.

3. Reinforcing bars shall be shown as bent where needed to clear waterstops and/or maintain uniform cover.

4. No fabrication shall commence until shop drawings are approved. All bars shall be shop fabricated.

B. Submit single (one)-page catalog cut for threaded rebar splicing system.

C. Submit catalog cuts, clearly marked to indicate each of the following: bar supports for exposed surfaces and bar supports bearing on grade.

D. Mill test reports showing physical and chemical analysis shall be provided upon request by Engineer.

1.05 COORDINATION

A. All construction joints, expansion joints, and control joints must be coordinated by the Contractor so that all reinforcement interruptions and/or splices can be shown.

B. Contractor shall locate all wall/slab openings on the shop drawings prior to the Engineer's review

C. Contractor shall coordinate the supply of all bar supports.

1.06 QUALITY ASSURANCE

A. Reinforcement work shall conform to the applicable requirements of ACI 301, ACI 315, ACI 318, and CRSI Recommended Practice for Placing Reinforcing Bars.

B. All steel shall have the manufacturer's mill marking rolled into the bar which shall indicate the producer, size, type, and grade.

C. All reinforcing bars shall be neatly bundled and tagged for placement when delivered to the job site. Bundles shall be properly identified for coordination with mill test reports.

1.07 DELIVERY, STORAGE, AND HANDLING

A. Deliver reinforcing bars and accessory materials to the site in an undamaged condition.

B. Bars shall not be stored in direct contact with earth and shall be kept free of mud.

C. Bundles of bars may be loaded in or on structures, providing the Contractor avoids premature loading or overloading of the structure. Surface protection from rust stains, etc., shall be provided by the Contractor.

PART 2 PRODUCTS

2.01 MATERIALS

A. Deformed Reinforcing Steel Bars - ASTM A615, Grade 60.

B. Welded Wire Reinforcement (WWR) - ASTM A185 for plain wire and ASTM A497 for deformed wire, supplied in flat sheets only.

C. Bar Supports

1. Bar supports shall be a non-bleeding and non-staining material where concrete surfaces remain exposed. Plastic tipped or stainless steel protected bar supports shall be used for this purpose.

2. Bar supports bearing on grade, insulation, or soft material shall be continuous runner type supplied with continuous welded-on plates or minimum 4000 psi precast concrete blocks specifically cast for this intended use to assure proper support of reinforcing. Individual high chair supports will not be considered adequate.

3. The use of brick or CMU support for reinforcement shall not be permitted.

D. Expansion joint dowel and sleeve system shall be as specified in Section 03250.

E. Threaded rebar splicing system shall be a shop-fabricated assembly. Use Barsplice Products, Inc. "BP1 Barsplicer System," ERICO "Lenton Form Saver," Dayton Superior "Threaded Splicing Systems," or equal.

2.02 SOURCE QUALITY CONTROL

A. Shop Inspection - The Engineer reserves the right to inspect the manufacturer's facilities while fabrication of reinforcing steel for this project is being performed.

PART 3 EXECUTION

3.01 ERECTION-INSTALLATION-APPLICATION

A. Placement of reinforcement shall be in accordance with ACI and CRSI referenced publications.

B. Bars shall be spaced as shown on the approved shop drawings. Deviations, necessary because of interference with inserts, conduits, piping, small openings for ducts, etc., are allowable as long as four consecutive bars average out to the required spacing.

C. Where larger openings are encountered and bars must be cut, equivalent splice bars must be placed at each side of the opening plus #5 diagonal bars enveloping the opening at each corner (reference Standard Detail on Contract Drawings).

D. Bars shall be accurately located in forms and held in place before and during concreting by using supports of adequate strength and black annealed tie wire, #16 gage or heavier, to prevent steel displacement.

E. Tie wires shall be bent into the wall or slab so as to not intrude into the reinforcement concrete cover space.

F. Install bar supports as specified in Part 2. Brick or CMU supports shall not be permitted. Quantity of bar supports shall be adjusted to eliminate deflection of reinforcement.

G. The minimum center-to-center distance between parallel bars shall be two times the bar diameter, but in no case shall the clear spacing between the bars be less than 1-1/2 inches.

3.02 COVER

A. Clear concrete cover shall conform to ACI 318 and ACI 350 unless noted otherwise.

B. The clear cover shall be 2 inches for severe exposure such as wet wells, foundation walls, and tanks.

C. The reinforcing steel of footings, base slabs, and other members in which concrete is deposited against the ground shall have 3 inches of concrete cover between it and the ground contact surface.

D. Ends of reinforcing bars shall extend to within 2 inches of the outside face of the members into which they frame or terminate.

3.03 WELDED WIRE REINFORCEMENT

A. Welded wire reinforcement shall be securely supported, anchored, and tied integrally with the framework system to assure its final location in the slab; lap the ends of each mat in accordance with CRSI procedures.

B. The practice of "walking in" and placing the mats of reinforcement in freshly placed concrete will not be permitted.

3.04 SPLICES

A. All splices of reinforcing steel shall be lap spliced with bars placed in contact with each other and wired securely.

B. Number 11 and larger bars shall be butt-welded or connected by other positive mechanical means approved by the Engineer.

C. Minimum lap for reinforcing steel bars shall be as indicated on Contract Drawing S-1. Special splices shown on the Drawings, however, shall be lapped for the distance shown.

D. Attention is directed to the fact that the top bars in beams are required to extend one third of the span into the adjacent span (see typical bar placing diagram for beams). These top bars are not intended as splice bars, but are full value top reinforcement. The preferred placement is to have the required minimum space between all top bars. Bundling in pairs will be allowed if all the rules for bundled bars (ACI 318) are met.

E. Splices shall not be placed at points of maximum stress. However, in instances where they are unavoidable, the splice location in every second parallel bar shall be offset by alternating at least one and a half times the splice length.

F. Base mat bottom bar splices shall not coincide with wall dowel locations. Stagger adjacent bottom bar splices that do not occur at a construction joint.

G. Welding of reinforcing bars shall not be allowed unless specifically approved by the Engineer.

H. For compression members (columns, etc.) mechanical connections may be used, but only at locations approved by the Engineer. Square sawn ends are required for direct contact stress transfer in these devices and the connections shall develop at least 125 percent of the smaller bar's tension values.

I. Observe the rules for staggering splices.

J. Splices of ring bars for circular structures shall be lapped and splices shall be alternately staggered in adjacent rings by a distance of two times the splice length (reference Standard Detail on Contract Drawings).

3.05 FIELD QUALITY CONTROL

A. The Contractor shall advise the Engineer of his intentions to place concrete allowing adequate time to observe all reinforcing steel in place. Any repairs, corrections, cleaning, removal of debris, etc., necessary shall be accomplished prior to concrete being placed in that area.

B. Wall forms and any deep formwork shall be checked by Engineer before closing the form, as well as immediately prior to placing concrete.

C. Prior to concrete deposition, reinforcing steel shall be free from mortar, mud, loose mill and rust scale, grease, oil or any other coatings, including ice, that would reduce bond with the concrete.

D. Where there is a delay in depositing concrete, reinforcement shall be rechecked and cleaned when necessary. Cleaning shall be done by whatever mechanical means is necessary to return it to an acceptable condition.

END OF SECTION

SECTION 03250

CONCRETE JOINTS AND ACCESSORIES

PART 1 GENERAL

1.01 SECTION INCLUDES

A. Concrete joints.

B. Waterstop material.

C. Sealant material for submerged joints in concrete.

D. Miscellaneous joint accessories.

E. Bonding agent.

1.02 RELATED SECTIONS

A. Section 03100 - CONCRETE FORMWORK
B. Section 03200 - CONCRETE REINFORCEMENT
C. Section 03300 - CAST-IN-PLACE CONCRETE

1.03 SUBMITTALS

A. Submit one-page catalog cuts for joint filler material and joint sealant, clearly indicating which item(s) are to be used.

B. Submit one-page catalog cuts for waterstops and waterstop accessories, clearly indicating which item(s) are to be used.

C. Submit one-page catalog cut for expansion joint dowel and sleeve system.

D. Submit one-page catalog cut for bonding agent.

1.04 DELIVERY, STORAGE, AND HANDLING

A. Store materials off the ground to provide protection from dampness.

PART 2 PRODUCTS

2.01 TYPES OF JOINTS

A. Construction Joint - The joint between two adjacent concrete placements, created by casting fresh concrete in contact with a previously cast (hardened) concrete placement. All typical reinforcement passes through the joint. A minimum of three days shall elapse between the casting of adjacent concrete placements for construction joints intended to be a shrinkage-compensating joint.

B. Control Joint - A shrinkage-compensating joint with a groove formed or cut in the face(s) of the concrete member in order to cause a weakened plane, intended to crack. Only 50 percent of the typical reinforcement passes through the joint. In walls and slabs thicker than 14 inches, this joint is created similar to a construction joint. In walls and slabs less than 14 inches thick, this joint may be created similar to a construction joint or shall be cast as a monolithic placement.

C. Isolation Joint - The joint between two adjacent concrete placements, created by casting fresh concrete adjacent to a previously cast (hardened) concrete placement, but separated by a joint filler material, to allow for expansion and contraction of concrete.

D. Expansion Joint - A joint constructed similar to an isolation joint, but a slip dowel (sleeved) passes through the joint, to allow for expansion and contraction of concrete but intended to limit differential displacement.

2.02 MATERIALS

A. Expansion joint filler shall be preformed, closed cell, high grade polyethylene or non-extruding PVC, such as "Expansion-Joint Filler" by BASF Chemical Company, "Plastic Expansion Board" by Westec Barrier Technologies, "Deck-O-Foam" by W.R. Meadows, Inc., or equal.

B. Isolation Joints - Filler material shall be closed cell rigid foam, cork, or non-impregnated fiberboard.

C. The joint filler shall be compatible as a back-up material, with regard to the sealant not bonding to or being stained by the backup. If the joint filler is a material that will bond to the sealant, polyethylene tape shall be used to cover the backup. The polyethylene shall be of a type that will not bond to the sealant.

D. Sealant for expansion and control joints in structures designed for submerged conditions to either contain or hold out liquids (including groundwater) such as tankage, basements, flow channels, galleries, etc. shall be polyurethane or polysulfide material.

1. Use BASF Chemical Company "Sonolastic Polysulfide Sealant," Sika Corporation "Sikaflex-1a," "Sikaflex-2c," The Euclid Chemical Company "Tammsflex NS," or equal.

E. Construction and control joints for interruptions in concrete placement in mat foundations, beam and slab systems, and walls shall be made from lumber with custom cut holes or slots to pass all reinforcing through and with standard keyway and waterstop. These "bulkheads" are to be securely fastened to the deck, wall, and/or beam forms. They shall be the same depth as the concrete section and produce dense, clean, sharp edges (top, bottom and side) when stripped.

F. A dowel and sleeve system shall be provided at expansion joints in concrete slabs and walls as shown on the Contract Drawings.

Deformed or smooth steel dowels shall be provided with a close fitting sleeve of plastic. The plain steel dowel shall conform to ASTM A572 or A588 with 50 ksi yield strength. The sleeve shall provide positive means to assure 1-inch free travel of the dowel after installation.

G. Waterstops for Use in Liquid Containment Structures and Tankage

1. Waterstop material shall be PVC 6-inch by 3/8-inch ribbed center bulb waterstop "No. CR-6380 Wirestop" by Paul Murphy Plastics Company; "No. 705" by Greenstreak; or equal. Split units may be used instead of splitting the formwork.

2. For expansion joints, use PVC 9-inch by 3/8-inch ribbed center bulb waterstop "No. CR-9380 Wirestop" by Paul Murphy Plastics Company; "No. 718" by Greenstreak; or equal.

3. As shown on the Contract Drawings, where new concrete is cast against hardened concrete:

a. Use a premolded 3/4-inch thick bentonite waterstop strip which expands on contact with water. Waterstop and primer shall be "Waterstop-RX" by

CETCO Building Materials Group, "Swellstop" and "Swellstop Primer" by Greenstreak, or equal.

b. Use a special shape, "retrofit," PVC waterstop with epoxy adhesive against existing concrete, stainless steel fasteners into concrete through stainless steel batten strips. Waterstop system shall be #JP336 and #JP320 by JP Specialties, #667 and #655 by Greenstreak, or equal.

4. To provide continuity of waterstops in all applications, use a water-swelling sealant such as "Akwaswell" by CETCO Building Materials Group, "Leakmaster" by Greenstreak, or equal.

H. Bonding Agent - Use a corrosion inhibiting, non-vapor barrier, extended open time bonding compound. Use Sika Corporation "Armatec 110 EpoCem," BASF Chemical Company "Emaco P24," The Euclid Chemical Company "Duralprep A.C.," or equal.

PART 3 EXECUTION

3.01 INSTALLATION OF CONSTRUCTION JOINTS

A. Construction Joints in Tank Base Slabs and Mat Foundations

1. Slab construction joints shall be placed at locations shown on the Contract Drawings.

2. The joint layout shall be shown on the reinforcing steel shop drawings.

3. When slab placements must be terminated, construction joints shall be installed in advance of the day's placement and shall be located at an approved construction joint location.

4. Slab construction joints have 100 percent of the reinforcement passing through the joint.

5. Waterstops shall be installed at all construction joints in tanks, flow channels, basements, etc., which are intended to hold liquid or keep areas dry. It is the Contractor's responsibility to lay out the waterstops and assure continuity of intended design.

6. Joints shall be thoroughly vibrated during concrete placement.

7. All construction joints shall be wetted immediately before new concrete placement.

8. In liquid-containing structures (or as indicated on the Contract Drawings), adjacent concrete sections shall not be cast against a concrete placement that is less than three days old.

B. Construction Joints in Walls

1. Wall construction joints shall be placed at locations shown on the Contract Drawings.

2. The joint layout shall be shown on the reinforcing steel shop drawings, in exposed areas carefully incorporated in the concrete finish work.

3. When wall placements must be terminated, construction joints shall be installed in advance of the day's placement and shall be located at an approved construction joint or control joint location.

4. Wall construction joints require custom grooves on both faces with 100 percent of the typical horizontal and vertical reinforcement passing through the joint. All the additional horizontal reinforcement shall not pass through the joint.

5. Waterstops shall be installed at all construction joints in tanks, flow channels, basements, etc., which are intended to hold liquid or keep areas dry. It is the Contractor's responsibility to lay out the waterstops and assure continuity of intended design.

6. Joints shall be thoroughly vibrated during concrete placement.

7. All construction joints shall be wetted immediately before new concrete placement.

8. In liquid-containing structures (or as indicated on the Contract Drawings), adjacent concrete sections shall not be cast against a concrete placement that is less than three days old.

9. The construction joint grooves shall be filled with backer rod and sealant.

C. Construction Joints in Suspended Slabs and Beams

1. Construction joints shall be located near the middle of spans of slabs, beams, or girders, unless a beam intersects a girder at the middle location, in which case joints in the girders shall be offset a distance equal to twice the width of the beam. Provisions shall be made for transfer of shear and other forces through construction joints by means of ledges, extended bars, dowels, etc.

2. Beams, girders, or slabs supported by concrete columns or walls shall not be cast or erected until concrete in the vertical support members has an age of at least 24 hours. Beams, girders, column capitals, and haunches shall be considered as part of a slab system and shall be placed monolithically therewith.

3.02 INSTALLATION OF CONTROL JOINTS

A. Control Joints in Walls

1. Wall control joints shall be placed at locations shown on the Contract Drawings.

2. The joint layout shall be shown on the reinforcing steel shop drawings, in exposed areas carefully incorporated in the concrete finish work.

3. Wall control joints require custom grooves on both faces and interruption of 50 percent of the typical horizontal reinforcement. All the additional horizontal reinforcement shall not pass through the joint.

4. Control joints in walls thicker than 14 inches shall be constructed with a construction joint, but with only 50 percent of the reinforcement passing through the joint. The adjacent concrete placements shall not be cast sooner than three days of the previous concrete placement.

5. Waterstops shall be installed at all control joints in tanks, flow channels, basements, etc., which are intended to hold liquid or keep areas dry. It is the Contractor's responsibility to lay out the waterstops and assure continuity of intended design.

6. Joints shall be thoroughly vibrated during concrete placement.

7. The control joint grooves shall be filled with backer rod and sealant.

3.03 INSTALLATION OF EXPANSION JOINTS AND ISOLATION JOINTS

A. Expansion Joints in Walls and Slabs

1. Expansion joints shall be provided as shown on the Contract Drawings.

2. Reinforcement or other fixed items embedded or bonded into the concrete shall not be run through expansion joints. Ends of reinforcement shall be held back 2 inches from joint. Provide appropriate expansion dowels (dowel and sleeve system) as shown.

3. Install 9-inch waterstop in liquid-containing structures. Dress edges of concrete corners to provide a smooth, uniform edge. Seal joints both sides when accessible.

B. Isolation Joints for Slabs on Grade - The floor shall be separated structurally from other building elements to accommodate differential movement. Isolation joints shall be used at junctions with walls, columns, foundations, and footings, or other points of restraint, such as drain pipes, chimneys, sumps, stairways, etc. Joint material shall be removed to the depth required for installation of the sealant.

3.04 INSTALLATION OF JOINT ACCESSORIES

A. Waterstops

1. Waterstops shall be installed in accordance with the manufacturer's directions. Splices shall be made with heat welding or with splicing accessories, either method to follow manufacturer's recommendations.

2. The waterstop shall be securely wired in place 12 inches on center to preserve its position during the placement of concrete. Waterstops shall be continuous, clean, and properly supported to assure watertightness. Hold waterstop down 3 inches from the top of tank walls.

3. Bentonite waterstops shall be installed in accordance with the manufacturer's directions. As required, the surface shall be prepared by grinding and washing. The recommended primer shall be applied followed by

the bentonite waterstop. Concrete cut nails with 1-inch diameter washers shall be used at 18 inches on center or closer to prevent waterstop displacement.

4. For "retrofit" waterstop installation, the existing concrete surface shall be prepared by abrasive blasting or grinding and washing followed by a primer and other installation instructions as provided by the manufacturer.

5. Use a water swelling sealant where necessary to ensure watertightness of finished construction.

B. Sealant

1. Joint fillers shall be held back for sealants. Where joint filler is flush with the adjacent concrete, enough filler material shall be removed so the joint can be sealed to the specified depth.

2. The sealant shall be installed in accordance with the manufacturer's instructions. Primer shall be applied as recommended by the manufacturer.

3. The sealant depth shall be controlled by the use of joint-fillers or back-up materials. The back-up material shall be non-impregnated and compressible; such as backer rod.

   Backer rod shall be about 1/8-inch larger in diameter than the width of the joint to allow for compression.

4. Where the depth of the joint does not permit the use of backer rod, a bond breaker (polyethylene strip) must be used to prevent bonding to the back of the joint.

JOINT WIDTH AND SEALANT DEPTH	
JOINT WIDTH (INCHES)	SEALANT DEPTH AT MIDPOINT (INCHES)
1/4 to 1/2	1/4
1/2 to 1	3/8 to 1/2
1 to 2	1/2

5. Sealant shall be applied to both sides of all joints where accessible, but shall not be installed prior to successful leak testing where applicable.

C. Bonding Agent

1. Prior to placing fresh concrete against existing hardened concrete, apply a bonding agent. Do not apply a bonding agent on shrinkage compensating joints.

2. Apply bonding agent for all toppings, equipment/ housekeeping pads, and patches.

END OF SECTION

SECTION 03300

CAST-IN-PLACE CONCRETE

PART 1 GENERAL

1.01 GENERAL

A. It is the intent of these specifications to produce high quality, dense, durable, watertight concrete. The Contractor will be responsible for the final in-place concrete quality. Care shall be used during mixing, placing, and curing to achieve the desired end result. The Contractor will be responsible to repair leaks, cracks, and unsound concrete, to the satisfaction of the Owner, at no additional cost.

B. Section Includes

1. Concrete mix design requirements.
2. Restrictions regarding embedments in concrete.
3. Placement and care of concrete.
4. Concrete testing.
5. Concrete repair.

1.02 RELATED SECTIONS

A. Section 03100 - CONCRETE FORMWORK
B. Section 03200 - CONCRETE REINFORCEMENT
C. Section 03250 - CONCRETE JOINTS AND ACCESSORIES
D. Section 03301 - TIGHTNESS TESTING OF FLUID CONTAINMENT CONCRETE STRUCTURES
E. Section 03350 - CONCRETE FINISHING
F. Section 03370 - CONCRETE CURING AND PROTECTION
G. Section 03600 - GROUT

1.03 REFERENCES

The publications listed below form a part of this specification.

A. American Concrete Institute (ACI)

ACI 211.1	Selecting Proportions for Concrete
ACI 301	Specifications for Structural Concrete
ACI 302	Guide for Concrete Floor and Slab Construction
ACI 304	Measuring, Mixing, Transporting and Placing Concrete
ACI 305R	Hot Weather Concreting
ACI 306R	Cold Weather Concreting
ACI 309	Practice for Consolidation of Concrete
ACI 318	Building Code Requirements for Structural Concrete
ACI 350R	Code Requirements for Environmental Engineering Concrete Structures

B. American Society for Testing and Materials (ASTM)

ASTM C31	Making and Curing Concrete Test Specimens
ASTM C33	Concrete Aggregates
ASTM C39	Compressive Strength of Concrete Specimens
ASTM C42	Obtaining and Testing Drilled Cores
ASTM C94	Ready-Mixed Concrete
ASTM C138	Unit Weight, Yield, and Air Content of Concrete
ASTM C143	Test Method for Slump of Concrete
ASTM C150	Portland Cement (Rev. B)
ASTM C172	Sampling Freshly Mixed Concrete
ASTM C231	Air Content of Freshly Mixed Concrete
ASTM C260	Air-Entraining Admixtures for Concrete
ASTM C295	Petrographic Examination of Aggregates
ASTM C311	Sampling and Testing Fly Ash or Natural Pozzolans for Use in Concrete
ASTM C457	Determination of Air Voids in Concrete
ASTM C494	Chemical Admixtures for Concrete
ASTM C595	Specification for Blended Hydraulic Cements
ASTM C618	Fly Ash and Pozzolan for Use in Concrete
ASTM C948	Density, Water Absorption, and Porosity of Fiber Reinforced Concrete
ASTM C989	Iron Blastfurnace Slag For Use in Concrete
ASTM C1260	Test for Alkali Reactivity of Aggregates

1.04 SUBMITTALS

A. Qualifications statement regarding batch plant certification.

B. Concrete Mix Designs - Concrete mixes used on this project shall be either established mixes verified by **"Field Test Data"** or new custom laboratory designed **"Trial Mixtures."** Requirements for either option are as follows.

All data shall be dated within the last year. Partial submittal will not be reviewed.

1. List amount and sources of mix ingredients:

- cement
- fly ash or slag (pozzolans)
- fine aggregate
- coarse aggregate
- water
- admixtures (including superplasticizer and fibers)

2. Strength Test Reports - The average strengths shall be higher than the required average compressive strengths (f'cr) as per ACI 301, paragraph 4.2.3.3.

3. Typed letter signed by officer of supplier stating that all ingredients for proposed mixes are identical and from the same source as ingredients used for concrete in the strength test reports.

4. Certified tests of fine and coarse aggregates meeting requirements in Part 2 of this specification.

5. Certified statement from source of fine and coarse aggregates pertaining to history of alkali-aggregate reactivity.

6. Certified mill test of cement and fly ash or slag.

7. One-page admixture catalog cuts.

C. Submit one-page catalog cut for bonding agent.

D. Submit one-page catalog cut for retarding admixture.

E. Submit one-page catalog cut for surface-applied hot weather evaporation reducer.

F. Submit a filled-in sample batch plant ticket prior to the first concrete placement.

G. Submit special requests for embedment of conduit, etc. Reference restrictions in Part 3 of this specification.

1.05 COORDINATION

A. Coordinate all concrete placements with electrical, instrumentation, mechanical, and structural drawings and specifications.

1.06 QUALIFICATIONS

A. The concrete batch plant providing concrete to this project shall be certified by the State DOT.

PART 2 PRODUCTS

2.01 CONCRETE

A. Concrete Classes and Their Use

Mix A	All uses not otherwise specified or provided for below
Mix B	Sanitary Structures - All concrete in contact with process water
Mix C	Concrete topping/fill at tankage and containment areas

Mix D	Fill concrete below structures
Mix E	Exterior landings, sidewalks, road curbs, and truck unloading containment pads

MIX	28-DAY COMPRESSIVE STRENGTH (PSI)	COARSE AGGREGATE SIZE PER ASTM C33	MINIMUM TOTAL CEMENTITIOUS CONTENT (LBS/CY)	MAXIMUM WATER/CEMENT RATIO (BY WEIGHT)
A	4,500	#57	575	.42
B	4,500	#467	575(1)	.42
C	4,000	#7	550	.44
D	2,500	#467	425	.50
E	5,000	#57	600	.42

(1) Fly ash content shall be 15 to 25 percent of total cementitious content. As an alternate to fly ash, use slag at 20 to 50 percent of total cementitious content. Maximum total cementitious content shall not exceed 660 lbs/CY.
(2) W/C ratio calculation shall include free water content of fine and coarse aggregates, if aggregates are not saturated surface dry (SSD) conditions.

B. All concrete shall be air-entrained with an air content of 6 percent $\pm$1-1/2 percent by volume.

C. Slump for all flatwork shall not exceed 3 inches. Wall concrete, columns and deep beams can be placed with a maximum slump of 4 inches (without plasticizer).

D. Concrete with superplasticizer shall be designed for a final slump of 4 to 6 inches.

2.02 MATERIALS

A. Cement

1. Cement shall be Portland cement Type I or Type II and shall conform to the standard requirements of ASTM Specification C150.

   If aggregates are susceptible to alkali-silica reactivity (ASR), cement shall be low alkali containing less than 0.60 percent of equivalent alkalies ($Na_2O + 0.658K_2O$) per ASTM C150, Table 2 unless other approved measures are included to mitigate ASR. The cement shall be tested frequently during construction, as outlined in Part 3, to monitor alkali levels.

2. If Type II cement is available, it shall be used for below grade construction and for sanitary structures or when air temperatures at the time of placement are expected to exceed 80 degrees F.

3. High early-strength cement (Type III with a maximum tri-calcium aluminate (C_3A) content of 8 percent) shall only be used with advance written approval by the Engineer.

B. Pozzolans

1. Mix B concrete shall contain pozzolans. Reference the mix design chart above.

2. Fly ash shall conform to the requirements of ASTM C618 Class F except as modified below:

   a. Loss of Ignition, Maximum - 5.0 percent.
   b. Maximum Retained on #325 Sieve - 30 percent.

3. Blastfurnace slag material shall meet the requirements of ASTM C989. A blend of Portland cement and ground iron blastfurnace slag shall contain no more than 50 percent slag. The resulting blend of cementitious material shall meet the requirements of ASTM C595.

   Blastfurnace slag material shall be specifically manufactured to produce higher concrete strengths and provide greater resistance to chloride penetration and sulfate attack.

C. Aggregates

1. Fine Aggregate (Sand)

   a. Natural or manufactured siliceous sand.

   b. Quantity of deleterious substances limited by Table 1 of ASTM C33.

   c. Graded within the limits of ASTM C33.

2. Coarse Aggregate

   a. Crushed stone or crushed gravel.

   b. Quantity of deleterious substances limited by Table 3 of ASTM C33 for Class 4S aggregates.

   c. Graded within the limits of ASTM C33.

3. Five cycle soundness tests for fine and coarse aggregates shall meet the requirements of ASTM C33.

PERCENT LOSS

	MAGNESIUM SULFATE	SODIUM SULFATE
Fine Aggregate	15	10
Course Aggregate	18	12

4. Source of fine and coarse aggregates shall not have a history pertaining to alkali-aggregate reactivity. In the event that aggregate source with potential alkali-aggregate reactivity is unavoidable, at least two of the following measures shall be taken to minimize this reaction:

   a. Provide low alkali cement.
   b. Use lithium-based additives.
   c. Test aggregates to show non-reactive.
   d. Use fly ash or slag.

D. Mixing Water - Clear and potable.

2.03 ADMIXTURES

A. General - Admixtures other than those specified may only be used after written approval by the Engineer.

B. Admixtures shall be as manufactured by BASF Chemical Company; Sika Corporation; The Euclid Chemical Company; W.R. Grace, Inc.; or equal.

C. All admixtures proposed shall be selected in advance so that the appropriate trial mixes can be made.

D. Air entrainment admixture shall be added to provide entrained air in the concrete in accordance with ASTM C260.

E. Mixes A, C, D, and E concrete shall contain a "water-reducing admixture" that meets the requirements of ASTM C494 Type A. This admixture shall not contain chlorides.

F. Mix B concrete shall contain a "high range water-reducing admixture" (superplasticizer) to improve workability that meets the requirements of ASTM C494 Types F or G.

G. Retarding Admixture - If air temperatures are expected to exceed 85 degrees F during the placement and/or finishing of any flatwork, a retarding admixture shall be used that meets the requirements of ASTM C494 Type D.

H. Evaporation Reducer - For all concrete flatwork during hot and/or windy weather conditions, apply to freshly placed concrete prior to finishing. Use BASF Chemical Company "Confilm," L&M Construction Chemicals "E-Con," Conspec by Dayton Superior "Aquafilm," or equal.

I. Acceleration admixtures associated with cold weather concrete are not allowed. Reference Section 03370 for cold weather protection procedures.

J. After material sources have been established and approved, these sources shall not be changed for the duration of the project.

K. The Engineer may require that a field representative of the admixture manufacturer provide occasional service in the field to assure proper use of the admixture.

PART 3 EXECUTION

3.01 PREPARATION, MIXING, AND HANDLING OF CONCRETE

A. Batch Plant Requirements - Measurement of materials at the batch plant shall be in accordance with ASTM C94.

B. The batch plant used to supply concrete for this project shall meet the following requirements:

1. Weight Hoppers - The plant shall have separate weight bins for cement and aggregate.

2. Scales - Shall measure the actual weight within an accuracy of 0.1 percent of full scale or one graduation, whichever is less. Scales shall be sealed annually by the Official Sealer of Weights and Measures.

3. Heating and Cooling of Materials

a. In cold weather, the batch plant shall be equipped to heat aggregates and water to produce concrete delivery temperatures at the project site in the range of 65 to 90 degrees F, taking into account air temperatures and site protection. Aggregates shall not contain ice or have frozen lumps nor shall they be heated to a temperature over 120 degrees F.

b. In warm weather, the batch plant shall be equipped to cool water with ice, and cool aggregates by shading and spraying with cool water, to obtain

concrete delivery temperatures at the project site of no greater than 90 degrees F. The Contractor shall take into account drive time, slump loss, admixtures, flash set, etc. and reduce delivery temperatures as appropriate.

4. Moisture Content - The automated batch plant shall adjust aggregate weights dispensed based on their moisture content.

C. Mixing Methods

1. All concrete shall be ready mixed and meet the requirements of ASTM C94.

   The truck mixer shall be equipped with a water tank for carrying mixing water. Water added to the mixer shall be measured to the nearest gallon by use of a water meter. For all trucks arriving on site without an operating water meter, water shall only be added manually into the back of the truck using a calibrated container. Water carried within the truck water tank shall not be used unmetered.

   Water can be added to the mixer to attain initial slump, but only within the limits of the specified water/cement ratio. After addition of water, the concrete shall be mixed at least 30 revolutions in the mixing speed range.

   Mixers shall meet the requirements of the "Truck Mixer and Agitator Standards" Truck Mixer Manufacturer's Bureau and shall bear their certification plate.

   Trucks shall be equipped with a revolution counting device.

2. A written delivery slip or ticket, prepared and signed by the plant operator shall be made out at the proportioning plant for each truck load batch. The delivery slip shall be given to the Engineer as soon as the truck arrives at the job site, and each slip shall show the following information, which represents actual quantities of batched materials in each truck:

   a. Truck number.
   b. Date and time truck is batched.
   c. Ticket number.
   d. Mix designation of concrete.
   e. Cubic yards of concrete.

f. Cement type and weight in pounds.
g. Weight in pounds of each size and type of aggregate.
h. Admixtures, weights in pounds and ounce.
i. Moisture content of fine and coarse aggregates.
j. Water added to the batch at the plant.
k. Water added to the batch during transport from plant to job site.
l. Water added to the batch at the job site.

The driver and/or testing laboratory technician shall record the number of gallons of water added during transport and at the job site. In no case shall the w/c ratio be exceeded.

Any truck delivering concrete to the job site without a delivery slip will be rejected and shall immediately depart from the job site.

3. After completion of mixing, discharging may begin immediately, otherwise the mixer shall be revolved at the agitating speed.

The total time interval from when the cement makes contact with the aggregates to the completion of discharge shall not exceed 90 minutes. The Engineer may reduce the total time limit in hot weather or under unusual conditions if unsatisfactory results are obtained.

4. Mixing at the Construction Site - If the time limits specified cannot be consistently achieved by mixing at the plant or in transit, concrete shall be mixed completely in the truck mixer following the addition of the mixing water at the point of deposition.

Trucks shall be loaded first with coarse and fine aggregates and admixtures during which time the drum may be revolved or rocked. Cement shall be added last and the drum shall remain stationary after the cement is added until water is added at the project site.

Mixing shall begin at the project site after the addition of water and shall continue for a minimum of 100 revolutions or until a uniform mix has been produced. Mixing time shall not exceed 15 minutes.

The entire load shall be discharged within 30 minutes after mixing has been completed.

3.02 EMBEDMENTS IN CONCRETE

A. Embed no pipes other than electrical conduit in structural concrete.

B. Obtain approval from Engineer for any variation from the following requirements unless shown on the Drawings. Make request in writing accompanied by suitable sketch.

1. Do not cut or displace any reinforcement.

2. Do not place conduit between concrete surfaces and reinforcement.

3. Restrict O.D. of conduit to 1/4 of slab thickness. Keep within middle half of that thickness.

4. Place parallel conduits at least 6 inches apart.

5. Conduits that cross must be bent such that they cross between 45 and 90 degrees from each other.

6. Conduits that cross can touch each other, but no more than three conduits can cross at any given location.

7. Do not embed conduit in beams.

3.03 CONCRETE PLACEMENT

A. The Contractor shall notify the Quality Assurance Agent, Engineer, and testing lab a minimum of 48 hours in advance of placement to allow sufficient time for scheduling and observation of the work and for any corrective measures which are subsequently required.

B. Preparation

1. Concrete shall not be placed until all reinforcement is secured in position, nor until the forms have been completely installed and cleaned; coated; form ties retightened; all sleeves, castings, pipe, conduits, anchors, forms for openings have been placed and anchored by the Contractor, nor until all water, snow, and ice have been removed from the space to be occupied by the concrete.

2. Finishing installation of reinforcing and finalization of formwork concurrent with starting of concrete placement is not acceptable.

C. All porous soil or concrete surfaces against which new concrete is to be placed shall be wetted down and dampened

prior to placement. Spraying from the concrete truck hose immediately prior to placement will not be considered sufficient.

D. Concrete shall be placed in accordance with ACI 302, ACI 304, and ACI 318.

E. Concrete shall be conveyed as rapidly as practicable to the point of deposit by methods which prevent the separation or loss of the ingredients.

F. Any concrete being placed shall not be allowed to free fall more than 6 feet as measured from the point of discharge to the bottom of the formed surface. All distances greater than 6 feet shall utilize elephant trunks with hoppers.

G. When placing concrete, sufficient illumination shall be provided in the interior of the forms so that the concrete, at places of deposit, is visible.

H. Concrete shall be placed and vibrated in layers not to exceed 30 inches. Reference ACI 309.

I. Vibration shall be applied directly to the freshly-placed concrete by successive vertical penetrations of the vibrator. It shall be of sufficient duration to accomplish thorough compaction and complete embedment of reinforcement and fixtures.

"Pencil" vibrators shall be on hand and utilized where required.

Vibration shall be supplemented by forking or spading by hand in the corners of forms.

On floor/roof slabs, the vibrator must not ride the form supporting the slab.

Since the duration of vibration required is dependent on the frequency, size of vibrator, and slump of concrete, the length of time must be determined in the field.

Vibrators shall not be used to move concrete laterally within the forms.

J. Place concrete continuously and at full depth of slabs (so as not to permit cold joints) between predetermined expansion, construction, or control joints.

3.04 PUMPING CONCRETE

A. Pumping Concrete - If the pump operator does not have direct visual contact with the location of concrete placement, two-way radio communications shall be provided.

3.05 CONCRETE CURING AND PROTECTION

A. The Contractor shall conform to ACI 305, ACI 306, and Section 03370 when concreting during normal, hot, or cold weather.

3.06 EQUIPMENT AND HOUSEKEEPING PADS

A. The Contractor shall provide minimum 4-inch high concrete pads for all mechanical, plumbing, HVAC, and electrical equipment.

B. If greater thicknesses are shown on Drawings or required by the equipment being installed, provide thickness required. Verify all sizes, locations and anchors with various Contractors.

C. If sizes are not shown on the Drawings, provide concrete pads 6 inches wider than the equipment in all directions.

D. Prior to placing concrete for equipment/housekeeping pads, use a bonding agent.

3.07 CONCRETE TOPPINGS (TYPE G FINISH, REFERENCE SECTION 03350)

A. At new tankage construction, finish the base slab with a Type A scratched finish. Precede the concrete topping with an application of bonding agent.

3.08 INCOMPLETE STRUCTURES

A. Structures which are incomplete may not be capable of withstanding backfill, hydrostatic, surcharge, storage and other permanent or temporary loading conditions imposed during construction. Control of such loading conditions shall be the sole responsibility of the Contractor.

3.09 TESTING FOR QUALITY ASSURANCE

A. The Owner shall hire and pay for the services of an independent testing laboratory to perform the testing for quality assurance. This testing shall consist of materials verification, fine and coarse aggregate moisture content and water absorption, w/c ratio, temperature, slump, air content, determination of the weight per cubic foot of fresh concrete, and tests for the compressive strength.

These test results will be used by the Contractor to assist his control of quality in order to meet specified values.

B. Testing will be required for each placement in excess of 5 cubic yards.

C. The following tests will be performed by the testing laboratory:

1. Aggregate Moisture Content - Upon Engineer's request, the testing laboratory shall visit the batch plant and obtain samples of fine and coarse aggregates for the purpose of verifying actual moisture content as reported by the batch plant.

2. Alkali Aggregate Reactivity (ASR) - Prior to the first concrete placement, the testing laboratory shall obtain samples of fine and coarse aggregates to complete an ASR test per ASTM C1260. Testing laboratory shall also send samples of fine and coarse aggregates to an outside laboratory for a petrographic analysis to report on the alkali-silica reactivity of the aggregates per ASTM C295. Testing laboratory shall report acceptability of aggregates relative to alkali-aggregate reactivity.

   As an alternative to performing an ASR test on the aggregates, the batch plant must provide acceptable results from a previous certified ASR test performed within the last two years.

3. Water/Cement (w/c) Ratio (Calculated Method)

   a. The w/c ratio shall be calculated and recorded for each truckload of concrete delivered to the job site. This calculation shall account for all moisture in the mix including water added during transport and at the job site and the free moisture in both fine and coarse aggregates (adjusted for absorption).

   b. Concrete which exceeds the w/c ratio specified on the approved mix design shall not be utilized.

4. Temperature - Shall be recorded by the testing laboratory for each batch of concrete delivered to the project.

5. Slump Test - Slump tests shall be made in the field by the testing laboratory on each batch of concrete produced, in accordance with ASTM C143.

6. Air Content Test (Fresh Concrete)

   a. Test for entrained air content in accordance with ASTM C231. Concrete which does not contain the proper amount of entrained air shall not be utilized.

   b. A minimum of two tests will be required for each day of operations. Also, at least one test shall be made for each 50 cubic yards and each class of concrete placed within a single day.

   c. If concrete is being pumped, a test shall be performed at both the truck and the other end of the pump discharge. These two tests shall be used to monitor the drop in air content and to better regulate the air content in forthcoming concrete batches.

   d. In the event that test results are outside the limits specified, additional tests shall be required to show that concrete meets the specification requirements or the concrete shall not be used on this project.

   e. Where finishes require a lower air content than specification requires (for instance, slabs-on-grade with "shake-on" applications), the air content shall be adjusted accordingly with the approval of the Engineer.

7. Unit Weight - The unit weight of the fresh concrete shall be measured in accordance with ASTM C138. The unit weight shall be recorded at the same interval as required for air content testing as stated above.

8. Compressive Strength Test

   a. Samples of concrete will be taken and tested by the testing laboratory for compressive strength in accordance with ACI 301; ASTM C31, C39, and C172; except as modified herein.

      At least one sampling will be taken for each 50 cubic yards of each class of concrete placed within a single day. No more than one sampling may be taken from a single batch to satisfy this requirement.

      One sampling shall consist of three test cylinders. One cylinder will be tested at 7 days, and two cylinders tested at 28 days. If the

concrete mix design consists of fly ash or slag, a fourth test cylinder shall be included. This fourth cylinder will be tested at 56 days.

Each cylinder will be identified by a tag, furnished by the Contractor, which will be hooked or wired to the side of the container.

It is the Contractor's responsibility that cylinders be stored in a temperature-controlled curing box, provided by the Contractor on the construction site, for 24 hours after they have been molded and held at a temperature between 60 degrees F and 80 degrees F. Contractor shall provide high/low thermometer to verify temperature range.

After 24 hours, the samples will be transported to the testing laboratory and moist cured until tested.

b. When field temperatures during the 24 hours immediately preceding the time of concrete placement have exceeded 90 degrees F, or have been less than 40 degrees F, or when freezing, hot weather, or other extraordinary field curing conditions are anticipated, or when requested by the Engineer, two additional cylinders shall be molded at each sampling for field curing.

These additional cylinders shall be located by the Contractor to be cured at the structure as near to the point where the sampled concrete was placed as practicable. These cylinders shall receive the same protection and be subject to the same environmental conditions as that portion of structure for a period of at least 21 days from the date of molding.

The additional cylinders shall thereafter be transported to the laboratory and stored at laboratory room temperature and conditions until testing at an age of 28 days.

When field cured cylinders fail to reach 85 percent of the specified compressive strength, then the Contractor shall institute a program to improve field curing/protection conditions and/or mix design.

If the Engineer has reason to believe that low field cured cylinder tests reflect concrete

strengths in the structure, he shall have the authority to order additional tests provided for below.

c. After job site storage, concrete test cylinders shall be transported in rigid boxes specifically sized and constructed to prevent cylinders from becoming damaged from tipping, falling, rolling, or bumping.

d. After a mean value of a ratio between 7-day and 28-day strengths has been established from 10 or more samplings the 7-day strengths shall subsequently be taken as a preliminary indication of the 28-day strengths.

Thereafter, should a 7-day test strength from any sampling be more than 10 percent lower than the 7-day strength which corresponds with the specified 28-day compressive strength, the Contractor shall:

- immediately provide an additional seven days of curing in the affected area from which the deficient test cylinders were taken
- correct the mix for the next concrete placement

e. The strength level of concrete will be evaluated based on criteria in ACI 301, Chapter 17. Concrete is considered satisfactory if all of the following conditions are satisfied:

- the average of 28-day cylinder tests for any three consecutive samplings shall meet or exceed the strength required for the mix specified
- no more than 10 percent of the compressive tests have strengths less than that specified
- no individual compressive strength test result falls below the specified strength by more than 500 psi

f. In the event that the above conditions are not met, additional tests shall be performed as outlined in the next section.

D. Location of Field Tests - All sampling for field tests (cylinders, air content, slump) shall be taken at the delivery truck to allow proper correlation of the tests.

When concrete is being pumped, testing shall be taken at the pump discharge for meeting the requirements of this specification and to reflect material changes through the pump.

3.10 TEST REPORTS

A. The testing laboratory shall either provide carbon copy of field notes or next-day photocopies of field notes from field test results directly to Owner's on-site representative.

B. Compressive strength test results shall be submitted to the site representative within 5 business days following all 7-day, 28-day, and 56-day testing.

3.11 ADDITIONAL TESTS

A. When unsatisfactory test results arise, additional tests as outlined below shall be provided and paid for by the Contractor.

B. Compressive Strength - In the event that one or more standard samples represented by the average of the 28-day test cylinders fail to meet the strength requirements as outlined above, or if tests of field cured cylinders indicate the possibility of deficiencies in protection and curing, the Contractor shall have concrete core specimens obtained and tested from the affected area.

Three cores shall be taken for each sample in which the strength requirements were not met. The drilled cores shall be obtained and tested in conformance with ASTM C42; the tests to be conducted by an independent testing laboratory to be selected by the Engineer.

Coordinate locations with embedded items. Cores shall be obtained which do not include reinforcement.

A core specimen shall be taken perpendicular to the concrete surface and shall be taken from near the middle of a unit of deposit when possible and not near formed joints or obvious edges of a unit deposit.

The diameter of core specimens should be at least 4 inches. The length of specimen, when capped, shall be at least twice the diameter of the specimen.

The core specimens shall be carefully handled while transported to the laboratory. Cores shall be tested and evaluated in accordance with ACI 301, Chapter 17. Copies of the test results shall be mailed directly to the

Engineer. On the same day as they are drilled, core holes shall be repaired with non-shrink grout by the General Contractor.

C. The concrete in question will be considered acceptable if the average of three core specimen compressive strength tests meet or exceed the strength required for the mix specified.

No individual compressive strength test result shall fall below the specified strength by more than 500 psi.

D. Load Tests - If compressive strength requirements under the above procedure are not met by the results of core tests, then the Engineer may order load tests pursuant to ACI-318. Such tests shall be at the Contractor's expense.

E. Air Content - In the event that concrete placed by the Contractor is suspected of, or is tested and shown to not have proper air content or erratic air test results are obtained as specified above, the Contractor shall engage an independent testing laboratory to obtain and test samples for air content in accordance with ASTM C457 and to recommend modification to mix components or additives. The Contractor will be responsible for remediation to the satisfaction of the Engineer/Owner.

3.12 REPAIR OF CONTRACTOR-CAST CONCRETE

A. Areas of concrete in which cracking, spalling, or other signs of deterioration develop during initial curing or thereafter until the end of the guarantee period shall be removed and replaced, or repaired in accordance with this Article.

The Contractor shall submit manufacturer's product data sheets and recommended application procedures to the Engineer for approval.

B. Random Cracks - Shrinkage or structural cracks exceeding the widths listed in the following table shall be repaired utilizing a low viscosity, 100 percent solids, two-component epoxy resin injection system. First, lightly grind the crack surface to fully prepare and expose the extent of the crack, then remove all dust, debris or disintegrated material from crack or void by vacuuming. Injection shall be done using trained and experienced personnel utilizing modern, automated equipment. Manually operated hand pumps are not acceptable.

MAXIMUM ALLOWABLE CRACK WIDTHS

IN-SERVICE MOISTURE CONDITION	MAXIMUM ALLOWABLE CRACK WIDTH
Dry air or protective membrane	0.016 inches
Fluid-retaining or exposed to weather and/or high humidity	0.012 inches

1. Slabs - Where cracks extend through members and are accessible, seal bottom and top of crack. Inject epoxy in accordance with manufacturer's recommendations. Epoxy resin system shall be as manufactured and recommended by Sika Corporation, The Euclid Chemical Company, BASF Chemical Company, or equal.

2. Walls - Patching of walls or overhead cracks shall be accomplished by pressure injection using a similar epoxy material as used for slabs.

3. Preparation, viscosity of epoxy, and installation as recommended by the manufacturer.

C. Excessive Cracking - Concrete slabs containing an excessive amount of cracks as defined herein, and which will remain exposed, shall receive an epoxy mortar topping after sealing of cracks in accordance with the above paragraph.

Excessive cracking shall be defined as areas containing cracks averaging 0.016-inch wide or greater, and in excess of 15 linear feet of cracks per 100 square feet of slab. In the event that excessive cracking occurs in isolated areas of a given concrete slab, topping could only be required in the area of the cracks bounded by construction, expansion, or control joints pending Engineer approval.

Epoxy mortar topping shall be concrete gray in color, shall be non-slip, and be applied to a minimum thickness of 1/8-inch. Proportions shall be 1 part resin to no more than 6 parts quartzite aggregate by volume. Surface preparations, priming, mixing, application and finishing shall be in accordance with the recommendations, and under the supervision of the epoxy mortar topping manufacturer.

Contractor shall submit a suitable remedial product to the Engineer for approval.

D. Spalls and Honeycombing - All weakened, damaged or disintegrated concrete shall be removed to sound concrete. For defective areas involving only the surface and/or the

finish of the concrete, reference Section 03350 for surface repairs.

For spalled and honeycombing areas involving depths generally less than 3 inches, utilize a polymer-modified cementitious repair mortar as recommended by Sika Corporation, The Euclid Chemical Company, BASF Chemical Company, or equal.

Surface preparation, mixing, priming and application shall be in conformance with manufacturer's recommendations. If a dry surface cannot be obtained, the Contractor shall submit a suitable remedial product to the Engineer for approval.

E. Substrength Concrete

1. Concrete which fails to meet the strength requirements as outlined above in Article 3.11, will be analyzed by the Engineer as to its adequacy based upon design loading and exposure conditions for the particular area of concrete in question.

2. If the concrete in question is found unacceptable based upon this analysis, that portion of the structure shall be strengthened or replaced by the Contractor at his expense. The method of strengthening or extent of replacement shall be as defined by the Engineer.

3. Concrete not requiring strengthening but still falling below the strength requirements, may be accepted by the Owner in accordance with the General Conditions, specifically the paragraph entitled "Acceptance of Defective Work."

F. Inadequate Air Content - Concrete which will be exposed to freeze-thaw cycles when in service, and which is found to have inadequate air content, shall be replaced to the extent defined by the Engineer.

END OF SECTION

SECTION 03301

TIGHTNESS TESTING OF
FLUID CONTAINMENT CONCRETE STRUCTURES

PART 1 GENERAL

1.01 SECTION INCLUDES

A. Leak testing (hydrostatic test) procedures to verify the new construction of high quality, dense, durable, watertight fluid containment concrete structures (including tankage and channels), all referred to as tanks in this section.

B. Leakage testing schedule.

C. Leak testing calculations.

D. Repair of concrete that does not pass the leak testing.

1.02 RELATED SECTIONS

A. Section 03300 - CAST-IN-PLACE CONCRETE: Concrete repairs.

1.03 REFERENCES

The publications listed below form a part of this specification:

A. American Concrete Institute (ACI)

1. ACI 350.1 Tightness Testing of Environmental Engineering Concrete Structures

1.04 SUBMITTALS

A. Completed report on acceptable leakage testing results for each tank listed in the leakage testing schedule.

B. Proposed concrete repairs for tankage that has not passed the leakage test.

1.05 COORDINATION

A. The Contractor shall be responsible for the supply and disposal of water needed to leak test all tankage identified in the leakage testing schedule.

B. Each cell (compartment) of multi-cell tanks shall be considered a single tank and tested individually.

C. Tank shall not be backfilled prior to acceptable completion of leak testing.

D. No tank shall be leak tested before all of the structure is complete and the tank's concrete has attained its specified compressive strength.

E. The Contractor shall be responsible to plug all pipes and tank penetrations prior to the start of leakage testing.

1.06 HYDROSTATIC TEST (HST) CRITERION

DESIGNATION	TIGHTNESS CRITERION
HST-NML	No measurable loss
HST-025	0.025 percent per day
HST-050(1)	0.050 percent per day
HST-075	0.075 percent per day
HST-100	0.100 percent per day
HST-VIO(2)	Visual inspection only

(1) Standard criterion for tankage if no other is stated.
(2) This shall be a preliminary test for all other test designations.

1.07 LEAKAGE TESTING SCHEDULE

STRUCTURE	ELEVATION OF TEST WATER LEVEL(1)	TEST DESIGNATION
All fluid containment structures	High water level	HST-050

(1) Elevation of test water level shall be the high water level indicated on the Hydraulic Profile on the Contract Drawings.

PART 2 PRODUCTS

2.01 TESTING MATERIALS

A. Water - Clear and potable.

B. Floating Control Container – Floating, Non-metallic, calibrated open container for used to measure evaporation and precipitation during testing.

PART 3 EXECUTION

3.01 GENERAL PROCEDURE

A. Test designation HST-VIO shall be the preliminary test for all other HST tests as well as an individual standard test.

3.02 TANK INSPECTION AND HST-VIO - PART 1

A. Clean exposed concrete surfaces of the tank of all foreign material and debris.

B. Standing water inside or outside the tank that would interfere with the observation of the exposed concrete surfaces shall be removed.

C. Concrete surfaces and concrete joints shall be inspected for potential leakage points and shall be repaired prior to filling the tank with water.

D. All openings, fittings, and pipe penetrations in the tank shell shall be inspected at both faces of the concrete, if practical. Defective or cracked concrete shall be repaired prior to filling the tank with water.

3.03 TEST PREPARATION AND HST-VIO - PART 2

A. All tank penetrations and outlets shall be sealed to prevent the loss of any water from the tank during the test. If the tank is to be filled using the tank inlet pipe, positive means shall be provided to check that water is not entering or leaving the tank through this pipe once the tank is filled to test level.

B. Tank penetrations and pipe, channel, and conduit outlets shall be monitored before and during the test to determine the watertightness of these appurtenances. Leakage at these outlets shall be repaired prior to test measurements. No allowance shall be made in test measurements for uncorrected known points of leakage. The flow from the underdrain system shall be monitored during this same period and any increase in flow shall be recorded.

C. The groundwater level shall be brought to a level below the top of the base slab and kept at that elevation or at a lower elevation during the test.

D. The initial filling of a tank should not exceed a rate of 4 ft/hour. Filling shall be continued until the water

surface is at the design maximum liquid level or 4 inches below any fixed overflow level, whichever is lower.

E. The water shall be kept at the test level of unlined concrete tanks for at least three days prior to the start of the actual test.

F. The exterior surfaces of the tank shall be inspected during filling of the tank. If any flow of water is observed from the tank exterior surfaces, including joints or cracks, the defect causing the leakage shall be repaired.

3.04 TEST MEASUREMENTS

A. The test measurements shall not be scheduled for a period when the forecast is for a substantial change in the weather pattern. The test shall also not be scheduled when the weather forecast indicates the water surface would be frozen before the test is completed.

B. The vertical distance to the water surface shall be measured from a fixed point on the tank above the water surface. Measurements shall be recorded at 24-hour intervals.

C. The test period shall be at least the theoretical time required to lower the water surface 3/8 inch assuming a loss of water at the maximum allowable rate (see Article 3.05). The test period need not be longer than five days.

D. The water temperature shall be recorded at a depth of 18 inches below the water surface.

E. In uncovered tanks, evaporation and precipitation shall be measured. Evaporation shall also be measured in well-ventilated covered tanks.

1. A floating, restrained, partially filled, calibrated, open container for evaporation and precipitation measurement should be positioned in open tanks and the water level in the container recorded.

2. Determination of evaporation by shallow pan-type measuring devices is not allowed. The heating of the bottom of a shallow pan can cause accelerated evaporation of water, as compared to that taking place from a deep tank.

F. The tank shall be inspected daily for damp spots, seepage, and leakage.

G. After every 24-hour testing interval and at the end of the completed test period, the water surface shall be recorded at the location of the original measurements. The water temperature and the evaporation and precipitation measurements shall also be recorded.

H. The change in water volume in the tank shall be calculated and corrected for evaporation, precipitation, and temperature. If the loss exceeds the required criterion, the tank shall be considered to have failed the test. The tank shall also be considered to have failed the test if water is observed flowing or seeping from the tank or if moisture can be transferred from the exterior surface to a dry hand. Dampness or wetness on top of a footing, with no signs of flowing water, shall not be considered as a failure to meet the acceptance criterion.

3.05 QUANTITATIVE CRITERIA

A. The allowable rate of loss of water for HST-050 tightness tests shall not exceed 0.050 percent of the test water volume in 24 hours. The test shall be continued for a duration sufficient to cause a 3/8 inch drop in the water surface assuming the loss of water is at the maximum rate (0.050 percent per 24 hours).

B. There is no numerical value for the allowable loss of water during the HST-VIO tightness test. However, no flow or seepage of water from the tank shall be present on the exterior surfaces after the tank is filled to test level and throughout the duration of the test.

C. A restart of the test shall be required when test measurements become unreliable due to unusual precipitation or other external factors.

D. The tank builder shall be permitted to immediately retest a tank failing the test when no visible leakage is exhibited. If the tank fails the second test or the builder does not exercise the option of immediately retesting after the first test failure, the interior of the tank shall be inspected by a diver or by other means to determine probable areas of leakage. The tank shall only be retested after the most probable areas of leakage are repaired.

E. Tanks shall be retested until they meet the required criterion. Repairs shall be made to the probable leakage areas before each retest.

END OF SECTION

SECTION 03350

CONCRETE FINISHES

PART 1 GENERAL

1.01 SECTION INCLUDES

A. Concrete finishes.

B. Sample wall finish requirements and approvals.

C. ACI certification requirements.

D. Plugging of tie holes and patching of surface defects.

E. Saw cuts and repair to exposed rebar.

1.02 RELATED SECTIONS

A. Section 03100 - CONCRETE FORMWORK
B. Section 03300 - CAST-IN-PLACE CONCRETE
C. Section 03370 - CONCRETE CURING AND PROTECTION
D. Section 03600 - GROUT

1.03 REFERENCES

A. The publications listed below form a part of this specification.

1. American Society for Testing and Materials (ASTM) - ASTM C309, Liquid Membrane-Forming Compounds for Curing Concrete (note limited use on this project).

1.04 SAMPLES

A. For rubbed wall finishes on this project, the first wall placement shall be rubbed finished as soon as practical and shall be inspected by the Engineer for approval purposes. This first wall placement shall be re-rubbed as required until the Engineer's approval is obtained.

B. The approved sample(s) shall serve as the standard for color, texture, and quality for the remainder of the job. The Engineer shall be notified when samples (of each type finish) are completed and shall inspect same. The samples shall be approved by the Engineer in writing prior to starting the remaining areas.

1.05 SUBMITTALS

A. Submit product data and manufacturer's installation instructions for the following:

1. Plug mortar for tie holes.

2. Patching mortar for surface defects and Type V finish.

3. Curing compound used for Type V finish shall be submitted under Section 03370.

B. Submit copy of Contractor's ACI certification and/or experience record.

1.06 QUALITY ASSURANCE

A. Contractor's finishing foreman shall have ACI training and certification for concrete finishing and/or a minimum of five years' experience as a finishing concrete foreman.

PART 2 PRODUCTS

2.01 MATERIALS

A. Concrete repair materials are specified in Section 03300.

B. For limited use, to cure the grout used in a Type V finish, liquid curing compound shall be used. Reference Section 03370 for products.

C. Plug mortar shall be a fast-setting hydraulic cement compound that can immediately stop running water or seepage leaks in concrete. Use BASF Chemical Company "Waterplug," The Euclid Chemical Company "Speed Plug," L&M Construction Chemicals, Inc. "Duraplug," or equal.

D. Patching mortar mix design shall consist of 1 part Portland cement and 1-1/2 parts fine sand mixed to a thin masonry mortar consistency.

The sand and the Portland cement shall be obtained from the concrete batch plant where the concrete was purchased and shall be the same used in the concrete.

PART 3 EXECUTION

3.01 CONCRETE FINISHES

The finish of all walls shall be described below and in accordance with the schedule at the end of this section. Exposed tops of walls shall be finished, as described under slab and floor finishes.

A. As-Cast Wall Finishes

1. Type I - Rough Form Finish - No select form facing materials shall be specified for rough form finish surfaces. Tie holes shall be filled with plug mortar. Honeycomb and other surface defects shall be filled with patching mortar. Fins exceeding 1/4 inch in height shall be removed. Otherwise, surfaces shall be left with the texture imprinted by the forms.

2. Type II - Smooth Form Finish - The form facing material shall produce a smooth, hard, uniform texture on the concrete. It may be plywood, tempered concrete-form-grade hardboard, metal, plastic, paper, or other approved material capable of producing the desired finish.

   Material with raised grain, torn surfaces, worn edges, patches, dents, or other defects which will impair the texture of the concrete surface shall not be used.

   The arrangement of the facing material shall be orderly and symmetrical, with the number of seams kept to the practical minimum. It shall be supported by studs or other backing capable of preventing excessive deflection (see Section 03100 for tolerances).

   Tie holes and defects shall be patched as specified under Type I finish. All fins shall be completely removed.

B. Rubbed Wall Finishes - The following finishes shall be produced on concrete with a Type II smooth form finish. Where smooth rubbed finish is to be applied, the forms shall have been removed and necessary patching completed as soon after placement as possible without jeopardizing the structure and taking into account the required curing and protection. Reference Section 03370.

1. Type IV - New Concrete, Smooth Rubbed Finish - New concrete is defined here as concrete less than seven days old. Maintain curing and protection during the finishing operations.

   a. Wet curing can be briefly interrupted for finishing as long as the concrete is not allowed to surface dry. Contractor shall be prepared to re-wet every 15 minutes or more often as needed.

   b. The finishing shall be applied no later than the day following form removal (green concrete maximum seven days old). Surfaces shall be wetted and rubbed with a carborundum brick until uniform color and texture are produced.

   c. No cement grout shall be used other than the cement paste drawn from the concrete itself by the rubbing process. Delayed application of Type IV finish will not be accepted. A Type V finish will be required.

2. Type V - Old Concrete, Grout Rubbed Finish - Old concrete is defined here as concrete over seven days old that cannot be "green rubbed."

   a. Concrete shall have completed a seven-day cure per Section 03370.

   b. Large areas more than 12 feet high or 24 feet long shall be marked off with chalk lines to produce a uniform overall pattern.

   c. The surface shall be soaked with water. The surface being worked on shall not be in the sun while finishing. Curing in the sun is acceptable.

   d. Immediately after soaking, apply patching mortar mix with a rubber or cork float. The material is spread to form a thin paste over the area being worked on.

      The applicator shall always work to a wet edge.

      If the area starts to visually lighten up or dry, water can be added by shaking a wetted brush or using a pump sprayer to moisten the surface.

      The coated area shall be permitted to set similar to waiting for a concrete floor.

e. The applicator shall use a carborundum brick or specialty power tool to vigorously work the material in a circular motion to a smooth rubbed finish.

f. It is not intended to leave a thin mortar coating, "swirl," or "fan" pattern visible on the wall.

g. Should the mixture start to dry out or become too stiff to work, the applicator may re-wet the wall with either a pump or brush.

h. When the area is complete, it will be smooth and dark to medium grey in color. The smooth surface will be equal to a medium grade of sand paper with no "bugholes," globs, or excess material remaining.

i. When viewed from a distance about 20 to 30 feet, the concrete will appear to be a uniform grey, creamy smooth surface.

j. Grout rubbed walls shall be further cured by immediately spraying the surface with liquid curing compound. The curing compound must have appropriate approvals as stated above in Part 2 or a wet cure shall be maintained as specified in Section 03370 for an additional three days.

C. Slab and Floor Finishes - The finish of all floors, slabs, flow channels, and tops of walls shall be described below and in accordance with the schedule at the end of this section. Reference Table 03350-1 at the end of this section for floor finishing tolerances.

1. Type A - Scratched Finish - After the concrete has been placed, consolidated, struck off, and leveled, the concrete shall be floated with a magnesium float.

   If any water has been brought to the surface by the float during rough finishing, floating operations shall not continue until this water is allowed to evaporate.

   Floating shall proceed when the water sheen has disappeared and the surface has stiffened sufficiently. During floating, planeness of surface shall be checked with a 10-foot straightedge applied at not less than two different angles.

After floating to a Class C tolerance, the surface shall be roughened to a 1/4-inch amplitude with a coarse steel rake before final set.

2. Type B - Floated Finish - The procedure for a floated finish is the same as for Type A up to roughening the surface.

   The slab is floated, with all high spots cut down and all low spots filled to produce a surface with a Class B tolerance. The slab shall be finish floated to a uniform sandy texture.

   Tops of walls shall be finished with a Type B finish, except initial floating shall be followed immediately with a light trowel, being careful not to trowel in bleed water. If bleed water is present, Contractor shall wait for its evaporation before applying trowel finish.

3. Type C - Troweled Finish - The surface shall first receive a Type B floated finish. It shall next be power troweled, and finally hand troweled for thorough consolidation. The first troweling after power troweling shall produce a smooth surface which is relatively free of defects but which may still show some trowel marks. Additional trowelings shall be done by hand after the surface has hardened sufficiently.

   The final troweling shall be done when a ringing sound is produced as the trowel is moved over the surface.

   The finished surface shall be essentially free of trowel marks, uniform in texture and appearance and shall be plane to a Class A tolerance, except tolerance for concrete of tankage base slabs shall be to a Class B tolerance.

   On surfaces intended to support floor coverings, any defects of sufficient magnitude to show through the floor covering shall be removed by grinding.

   If the concrete surface contains excess alkaline, the Contractor shall acid etch the floor and wash same so that a proper bond can later be achieved between floor covering adhesive and the concrete.

4. Type D - Broom Finish - First, finish the concrete with a Type B floated finish. The concrete shall be

given a transverse scored texture by drawing a coarse broom across the surface.

5. Type E - Concrete Floor Sealant - All exposed to view floor slabs, sidewalks, landings, etc. not scheduled to receive other coatings or coverings, shall be sealed as follows:

   a. At new concrete floors, remove all dirt, oil, grease, and other foreign matter with caustics and detergents.

   b. At existing concrete floors, the concrete shall first be cleaned using an abrasive brush-off blast, followed by caustics and detergents.

   c. Thoroughly rinse and apply two coats of sealer in accordance with manufacturer's recommendations.

   d. The first coating shall be applied as soon as possible after finishing and curing and the second coating shall be applied near project completion after installation of all equipment and piping and after completion of other related construction activities.

6. Type G - Concrete Topping

   a. This finish shall be applied to certain tank slabs as scheduled. Reference Section 03300 for Mix C concrete.

   b. Prior to placement of topping, the floor or tank slab shall be prepared, cleaned, and dampened but left free of standing water.

   c. Immediately before the topping is placed, a coat of bonding grout (concrete without coarse aggregate) shall be scrubbed into the surface; it shall not be allowed to set or dry before the topping is placed. Bonding agents other than cement grout may be used. Reference Section 03300 for bonding agent.

   d. The concrete topping shall be placed against screeds in conformance with the pitches shown. The resulting finish shall be the equivalent to a Type C troweled finish. When applicable, the topping shall be "swept" in by the permanent mechanical equipment.

D. Finishes for Bottom and Side Formed Surfaces Exposed to View

1. General - This includes the side and underside finishes of slabs, stairs, beams, girders, columns and other miscellaneous surfaces left exposed after form removal.

2. Finishes - These surfaces shall be finished to the same quality as scheduled for the wall surfaces in a given area. In the event there is no scheduled finish, all surfaces exposed to view shall receive the equivalent of a Type II finish.

E. Finish Schedules

1. Floor Finishes - See Table 03350-2 at the end of this section.

2. Wall Finishes - See Table 03350-3 at the end of this section.

3.02 TIE HOLES AND SURFACE DEFECTS

A. General - Repair Contractor-cast concrete, including tie holes and surface defects (honeycombs, pits, and other defective concrete areas greater than 1 square inch or 1/4 inch depth).

B. Tie holes shall be filled with specified plug mortar.

C. Surface defects shall be removed down to sound concrete. If chipping is necessary, the edges shall be perpendicular to the surface or slightly undercut. No featheredges will be permitted.

1. The area to be patched and an area at least 6 inches wide surrounding it shall be dampened to prevent absorption of water from the patching mortar.

2. The quantity of mixing water shall be no more than necessary for handling and placing.

3. After surface water has evaporated, the patching mortar shall be applied.

4. The mortar shall be consolidated into place and struck off so as to leave the patch slightly higher than the surrounding surface. To permit initial shrinkage, it shall be left undisturbed for approximately one hour before being finally finished.

5. The patched area shall be cured using a liquid curing compound. Metal tools shall not be used in finishing a patched area which will be exposed. Exposed surfaces shall be left uniform in appearance. Patching shall be completed prior to application of other specified surface finishes.

3.03 SAW CUTS

A. After saw cutting concrete, repair exposed rebar as follows:

1. Chip back concrete around rebar end with maximum 20-lb. chipping hammer.

2. Cut off exposed rebar minimum 1-1/2 inches past concrete surface.

3. Patch hole using bonding agent and non-shrink grout.

TABLE 03350-1 - FLOOR FINISHING TOLERANCES

Class A	Troweled finishes and troweled toppings shall be true planes within 1/8-inch in 10 feet, as determined by a 10-foot straightedge placed anywhere on the slab in any direction.
Class B	Floated finishes shall be true planes within 1/4-inch in 10 feet, as determined by a 10-foot straightedge placed anywhere on the slab in any direction.
Class C	Scratch finishes and concrete fills shall be true planes within 1/4-inch in 2 feet, as determined by a 2-foot straightedge placed anywhere on the slab in any direction.

TABLE 03350-2 - WALL FINISHES

Type I	Rough Form Finish - All concrete not exposed to view. Below-grade walls not receiving dampproofing or insulation.
Type II	Smooth Form Finish - The interior of all tanks, flow channels, areas in contact with liquids, and all concrete to be dampproofed and/or receive insulation.
Type IV (Exterior)	Smooth Rubbed Finish - Exterior exposed-to-view concrete wall areas. Unacceptable Type IV finish areas shall be refinished with a Type V grout rubbed finish. This finish shall be carried to a minimum of 6 inches below finished grade.
Type IV (Interior)	Smooth Rubbed Finish - Interior exposed-to-view concrete wall areas, columns, curbs, equipment supports, and housekeeping pads. Unacceptable Type IV finish areas shall be refinished with a Type V grout rubbed finish.

TABLE 03350-3 - FLOOR FINISHES

Type A	Scratched Finish - For surfaces intended to receive bonded applied cementitious applications (Type G, Concrete Topping).
Type B	Floated Finish - At tops of walls and for surfaces intended to receive a Type D broom finish.
Type C	Troweled Finish - For interior floors intended as dry walking surfaces, flow channels, tankage, and all areas where in contact with liquids including Type G, Concrete Topping.
Type D	Broom Finish - For sidewalks and other exterior walking surfaces.
Type G	Concrete Topping - Where shown on the Contract Drawings.

END OF SECTION

SECTION 03370

CONCRETE CURING AND PROTECTION

PART 1 GENERAL

1.01 SECTION INCLUDES

A. Wet curing and protection for all concrete slabs (and beams) and walls (and columns) during normal weather conditions.

B. Limited uses of curing compounds.

C. Adjustments for concrete curing and protection during hot weather conditions.

D. Adjustments for concrete curing and protection during cold weather conditions.

1.02 RELATED SECTIONS

A. Section 03300 - CAST-IN-PLACE CONCRETE
B. Section 03350 - CONCRETE FINISHES

1.03 REFERENCES

The publications listed below form a part of this specification.

A. American Concrete Institute

1. ACI 305R - Hot Weather Concreting
2. ACI 306R - Cold Weather Concreting
3. ACI 308R - Guide to Curing Concrete

B. American Society for Testing Materials

1. ASTM C309 - Liquid Membrane Forming Compounds for Curing Concrete (Note - limited use on this project).

1.04 SUBMITTALS

A. Prior to placement of any concrete, submit an outline indicating various curing methods and procedures intended for use on this project during each of the following conditions:

1. Normal weather conditions.
2. Hot weather conditions.
3. Cold weather conditions.

B. Include procedures for slabs (and beams) and walls (and columns).

C. Include single-page catalog cut for curing compound with fugitive dye specifically indicated.

PART 2 PRODUCTS

2.01 CURING WATER

A. Water shall be potable.

B. Water shall be free of materials that have the potential to stain concrete.

2.02 CURING COMPOUNDS

A. Curing compounds shall be dissipating, VOC-compliant, water-based, liquid membrane-forming, including a fugitive dye, and conforming to ASTM C309, Type 1-D.

B. Use Conspec by Dayton Superior "RX Cure WB," The Euclid Chemical Company "Tammscure WB 30D," W. R. Meadows, Inc., "1100-Clear," or equal.

C. Curing compound shall be applied at twice the manufacturer's recommended application rate.

2.03 ADMIXTURES

A. Accelerating admixtures associated with cold weather concrete are not allowed.

PART 3 EXECUTION

3.01 PREPARATION

A. All freshly placed concrete shall be protected from adverse weather and from defacement. As soon as the concrete has been placed and horizontal top surfaces have received their required finish, provisions shall be made for providing continuous curing and protection as required below.

3.02 NORMAL WEATHER CURING

A. Definition of Normal Conditions - All conditions not defined as either hot or cold weather.

B. Slabs (and Beams), Curbs, Sidewalks, Toppings, and Other Flatwork

1. After finishing and immediately after the concrete surface has hardened enough to prevent dilution of the cement paste, provide continuous moist curing for at least the first 24 hours.

2. After the initial 24-hour period, cure for an additional six days with one of the following methods:

   a. Cover with waterproof paper.

   b. Cover with white polyethylene.

   c. Cover with burlap and continuous sprinkling with water.

   d. Continuous water spray with no covering.

C. Walls (and Columns)

1. Immediately after the concrete surface has hardened enough to prevent dilution of the cement paste, provide continuous moisture at the top of the formed surface for at least the first 24 hours.

2. After the initial 24-hour period, cure for an additional six days with one of the following methods:

   a. Leave forms in place, tight. Provide continuous moisture at the top of the wall.

   b. Leave forms in place; loosen after 24 hours. Provide continuous water at top of wall to soak sides.

   c. Remove forms; soak walls with water. Cover tightly with white polyethylene.

   d. Remove forms; cover with burlap and soak by continuous spray.

D. Interruptions, not to exceed a total of four hours are permitted for the purpose of layout, shoring or reshoring, finishing, or other required construction needs as long as the surface is not allowed to completely dry. The Contractor shall be prepared to spray the exposed surface every 15 to 30 minutes.

3.03 HOT WEATHER CURING

A. The Contractor shall conform to ACI 305R when concreting during hot weather except as modified below.

B. Definition of Hot Weather - When air temperatures exceed 85 degrees F, or when dry conditions exist even at moderate temperatures (follow guidelines of ACI 305R), particularly if accompanied by high winds, the Contractor and his concrete supplier shall exercise precautionary measures in preparing, delivering, placing, finishing and curing of the concrete.

C. Curing of the concrete shall begin immediately after completion of the initial finishing operation.

D. Slabs (and Beams) and Other Flatwork

1. After the initial 24-hour period of moist curing, continue wet cure for an additional six days with one of the following:

a. Soak with water and cover with white polyethylene.

b. Cover with burlap and continuous sprinkling with water.

E. Walls (and Columns) - After the initial 24-hour moist curing, continue wet cure for an additional six days with one of the following:

1. Leave forms in place, tight with soaker hose on top.

2. Leave forms in place; loosen after 24 hours. Provide continuous water or double soaker hoses.

3. Remove forms; soak walls with water. Cover tightly with white polyethylene over soaker hose at top of wall.

F. Interruptions, not to exceed a total of four hours are permitted for the purpose of layout, finishing, or other required construction needs as long as the surface is not allowed to completely dry. The Contractor shall be prepared to spray the exposed surface every 15 to 30 minutes.

3.04 COLD WEATHER CURING AND PROTECTION

A. The Contractor shall conform to ACI 306R when concreting during cold weather except as modified below.

B. Definition of Cold Weather - A period when for more than three consecutive days the average daily temperature drops below 40 degrees F. When temperatures above 50 degrees F occur during more than half of any 24-hour period, the concrete shall no longer be regarded as cold weather concrete. The Owner's representative shall monitor daily temperatures for determination of start and stop of cold weather concreting; Contractor shall comply with this determination.

C. The methods of curing and protecting the concrete shall be such as will prevent drying. Labor, equipment, and materials necessary for cold weather curing and protection (including heating) shall be on the site in sufficient quantity before the work begins.

D. Concrete must be cured and protected from cold weather simultaneously.

E. Curing

1. Slabs (and beams) and other flatwork shall be cured with one of the following:

   a. Coat with curing compound applied at twice the recommended manufacturer's application rate.

   b. Cover with polyethylene.

2. Walls (and columns) shall have forms left in place, tight for the first 24 hours. Apply double the application rate of curing compound to the top surface or cover with polyethylene. After the initial 24-hour period, cure for an additional six days with one of the following:

   a. Leave forms in place, tight as above.

   b. Forms loosened; immediately remove forms and apply curing compound at twice the manufacturer's recommended application rate to all surfaces.

   c. Forms loosened; immediately remove forms and cover tightly with polyethylene.

F. Protection

1. Protection shall proceed as follows:

a. For Flatwork (Slabs, [and Beams] Toppings, Etc.)

1) Cover with blankets and/or heated enclosure as required.

b. For Walls (and Columns)

1) Forms Left In Place, Not Loosened - Cover with blankets and/or heated enclosure as required.

2) Forms Removed Prior To End Of Protection Period - Re-cover with blankets and/or heated enclosure as required.

2. The length of the protection period for each type of member shall be as determined in the table below.

COLD WEATHER PROTECTION PERIOD				
TYPE OF MEMBER	SERVICE CATEGORY	TEMPERATURE RANGE	TYPE I OR II CEMENT (DAYS)	TYPE III CEMENT (DAYS)
Fill concrete	2	50°F - 70°F	3	2
Slab-on grade	3	50°F - 70°F	6	4
Columns	3	50°F - 70°F	6	4
Walls[1]	3	50°F - 70°F	6	4
Walls[2]	4[4]	50°F - 70°F	21[5]	14[5]
Beams	4[4]	50°F - 70°F	21[5]	14[5]
Slabs (other)[3]	4[4]	50°F - 70°F	21[5]	14[5]

(1) Walls that will not be service loaded (water tested or backfilled) for at least 60 days after placement.
(2) Walls that are to be service loaded soon after concrete placement.
(3) All structural slabs supported by temporary formwork.
(4) Formwork shall remain in place until the end of the protection period for Service Category 4 structural members.
(5) Protection period could be shortened based on concrete achieving at least 75 percent of the required design strength as determined by testing of field-cured cylinders.

G. Suitable means shall be provided for maintaining the deposited concrete within the temperature range as defined above. Curing provisions as stated above must be in place prior to exposing concrete to heat.

Heating may be provided by using a vented heating unit, insulated blankets, or a combination of both.

1. If blankets are to be used, they should be applied to the concrete as specified in ACI 306R, Chapter 7,

Charts 7.3.1-7.3.4. Special attention should be given to corners and edges of concrete members which could require about three times the thickness of insulation to maintain concrete temperature, as might be required for interior spaces. Also note that excessive amounts of blankets could raise the temperature of the concrete too high which could cause an increase of thermal shrinkage and cause cracking due to thermal shock.

2. Where heated enclosures are provided, vent flue gases from combustion heating units to the outside of the enclosure. Place and direct heaters to avoid areas of overheating or drying of the concrete surface. Exposed concrete surfaces must be protected and cured. Where continuous moist curing is not practical, tightly adhered polyethylene or curing compounds shall be used.

H. Monitoring of Concrete Temperatures

1. In order to better follow the Contractor's cold weather procedures, various thermometers (supplied and maintained by the Contractor) shall be placed along concrete members that are undergoing cold weather protection, particularly at corners and edges of concrete members where it is more difficult to maintain the required temperature.

2. Contractor monitoring of these temperatures must be done throughout the day, taking into account forecasted night conditions, so that the Contractor can make timely adjustments to maintain an even temperature.

3. Access to these thermometers must be made available for the Owner's representative to perform spot-checking of the Contractor's effectiveness to achieve proper cold weather protection.

4. The Contractor shall provide the proper type and sufficient quantity of thermometers to determine the temperature of the concrete. As a minimum, the Contractor shall provide, locate, and maintain at least one Hi-Low thermometer and at least two surface thermometers for <u>each</u> placement of concrete which is simultaneously undergoing cold weather curing and protection.

I. Interruptions to Protection

1. Measures shall be taken to assure the concrete temperatures will not drop below 32 degrees F.

2. Interrupted time must be made up in accordance with ACI 306R, Section 7.7 on a degree-hour basis.

J. After the required protection period listed in the above table, concrete shall have curing coverings removed and be allowed to gradually dry out prior to lowering temperatures to freezing as described in the table below:

MAXIMUM CONCRETE TEMPERATURE DROPS AT END OF PROTECTION PERIOD	
THICKNESS OF SECTION, INCHES	MAXIMUM GRADUAL DECREASE IN SURFACE TEMPERATURE DURING AND 24 HOURS AFTER END OF PROTECTION, °F
Less than 12	50
12 to less than 36	40
36 to 72	30
Greater than 72	20

K. Complete removal of curing compounds will be required prior to application of coatings or other toppings. A light abrasive blast or other mechanical means will be required.

END OF SECTION

SECTION 03600

GROUT

PART 1 GENERAL

1.01 SECTION INCLUDES

A. Non-shrink grout for setting of equipment, precast units, and baseplates.

1.02 RELATED SECTIONS

A. Section 03350 - CONCRETE FINISHES
B. Section 03370 - CONCRETE CURING AND PROTECTION
C. Section 05505 - CONCRETE AND MASONRY ANCHORS

1.03 REFERENCES

The publications listed below form a part of this specification.

A. American Concrete Institute

ACI 304	Recommended Practice for Measuring, Mixing, Transporting, and Placing Concrete
ACI 305R	Hot Weather Concreting
ACI 306R	Cold Weather Concreting
ACI 309	Practice for Consolidation of Concrete

B. American Society for Testing and Materials

ASTM C31	Method of Making and Curing Concrete Test Specimens in the Field
ASTM C33	Concrete Aggregates
ASTM C88	Test Method for Soundness of Aggregates by Use of Sodium Sulfate or Magnesium Sulfate
ASTM C109	Test Method for Compressive Strength of Hydraulic Cement Mortars (Using 2-inch or 50-mm Cube Specimens)
ASTM C143	Test Method for Slump of Portland Cement Concrete
ASTM C150	Portland Cement
ASTM C1019	Standard Method of Sampling and Testing Grout

1.04 SUBMITTALS

A. Submit single-page catalog cut for non-shrink grout.

PART 2 PRODUCTS

2.01 GROUT

A. Non-Shrink Grout - Shall be a flowable non-gas liberating cement base product, manufactured premixed, requiring only the addition of water or latex mix solution as supplied by the grout manufacturer at the job site. All components shall be inorganic.

1. For supporting smaller equipment of 10 HP or less, use non-shrink grout with a minimum strength of 5000 psi at 28 days. Also use for setting of precast sills, etc.

2. For support of heavy equipment, column baseplates, other large loads, and when stresses from vibrations are involved or when equipment will be subject to thermal movement, use grout specifically manufactured for such applications.

   Provide Engineer with manufacturer's certification for the use intended, including 2-inch by 2-inch grout cube strength tests in accordance with ASTM C109. Grout tests shall achieve 5000 psi in 7 days and 7000 psi in 28 days.

B. Grout for patching and plugging concrete is as specified in Section 03350.

C. Adhesive anchor systems used to install bolts into concrete and masonry and to install reinforcing dowels into concrete shall be as specified in Section 05505.

PART 3 EXECUTION

3.01 INSTALLATION

A. Prepare surfaces, mix products, and install grout per manufacturer's instructions.

END OF SECTION

SECTION 05500

MISCELLANEOUS FABRICATIONS

PART 1 GENERAL

1.01 SECTION INCLUDES

A. Shop-fabricated ferrous and non-ferrous metal and fiberglass items, including miscellaneous framing, custom fabrications, bollards, bearing plates, anchor bolts, ladders, access hatches, checkered floor plate, wall brackets, custom pipe supports, etc.

1.02 RELATED SECTIONS

A. Section 05505 - CONCRETE AND MASONRY ANCHORS

1.03 REFERENCES

ANSI A14.3	Ladders, Fixed, Safety Requirements
ASTM A36	Structural Steel shapes (36 ksi)
ASTM A53	Pipe, Steel, Black and Hot-Dip Galvanized
ASTM A123	Zinc Coating (Hot-Dip Galvanized) on Steel Products
ASTM A153	Zinc Coating (Hot-Dip Galvanized) on Steel Hardware
ASTM A276	Stainless and Heat-Resisting Steel Bars and Shapes
ASTM A307	Carbon Steel Bolts and Studs, 60 ksi Tensile Strength
ASTM A325	Structural Bolts, Heat Treated, 120/105 ksi Tensile Strength
ASTM A489	Carbon Steel Eyebolts
ASTM A500	Cold-Formed Welded and Seamless Carbon Steel Structural Tubing in Rounds and Shapes
ASTM A536	Ductile Iron Castings
ASTM A992	Structural Steel Shapes (50 ksi)
ASTM B209	Aluminum-Alloy Sheet and Plate
ASTM B221	Aluminum-Alloy Extruded Bars, Rods, Wire, Shapes, and Tubes
ASTM B308	Aluminum-Alloy 6061-T6 Standard Structural Shapes
ASTM B632	Aluminum Tread Plate
ASTM F593	Stainless Steel Bolts, Hex Cap Screws, and Studs
AWS A2.0	Standard Welding Symbols
AWS D1.1	Welding Code - Steel
AWS D1.2	Welding Code - Aluminum
SSPC	Steel Structures Painting Council

1.04 SUBMITTALS

A. Shop Drawings - Indicate profiles, sizes, connections, attachments, reinforcing, anchorage, size and type of welds, holes, fasteners, and accessories.

B. Include detailed fabrication drawings, erection drawings, bill of materials, finishes, and applicable details such that the Contractor does not need to reference the Contract Drawings.

C. Submit manufacturer's product data for floor hatches, ladders, and other manufactured items to include details of manufactured product with installation instructions.

D. Submit welder personnel AWS certification.

1.05 QUALIFICATIONS

A. Weld procedures and welder personnel shall be AWS qualified.

PART 2 PRODUCTS

2.01 MATERIALS

A. Steel Channels, Angles, and Plates - ASTM A36.

B. "W"-Shape Steel Beams - ASTM A992.

C. "S"-Shape Steel Beams - ASTM A36.

D. Rectangular and Square Hollow Structural Sections (HSS) - ASTM A500, Grade B.

E. Aluminum Sections - ASTM B308 Alloy 6061-T6. Use Aluminum Association shapes.

F. Stainless Steel Structural Shapes - ASTM A276, Type 316 or Type 316/316L, annealed.

G. Stainless Steel Angles and Plates - ASTM A276, Type 316 or Type 316/316L.

H. Aluminum Checkered Floor Plate - ASTM B632 Alloy 6061-T6.

I. Pipe - Schedule 40 and Schedule 80; steel ASTM A53 Grade B; aluminum alloy 6061-T6.

J. Fiberglass Fabrications - All structural shapes shall be manufactured using the pultrusion process with a minimum glass content of 45 percent. Use extra corrosion-resistant vinyl ester resin material for all shapes and plates. All fiberglass resin shall contain an integral UV inhibitor and be produced with a resin-rich surface to protect against exposure and wear.

K. Bolts - F593 stainless steel, Type 316 with raised letter of symbol indicating manufacturer; ASTM A325 carbon steel; galvanized bolts galvanized to ASTM A153; ASTM A489 steel eyebolts.

All bolt accessories including nuts, washers, etc. shall be of the same material as the bolts.

L. Bolted Attachment to Concrete and Masonry - For structural loads, use minimum 5/8-inch diameter adhesive anchors as specified in Section 05505. Expansion anchors are not allowed unless specifically requested by Contractor for a particular application and approved by Engineer.

M. Anchor Rods (Bolts) - F1554 anchor rods galvanized to ASTM A153. Reference Section 05505.

N. Welding Materials - AWS D1.1 and D1.2; type required for materials being welded.

O. Touch-Up Primer for Galvanized Surfaces - Zinc-rich paint.

P. Bollards - 6-inch steel pipe; concrete filled, crowned cap; prime and finish paint.

Q. Anchorage for metal items cast in concrete shall have welded-on strap anchors 2 feet o.c., made from 1/4-inch thick x 1-inch wide x 6-inch long bar stock with each end bent 90 degrees.

R. Access Hatches

1. Exterior - Use 1/4-inch aluminum checkered plate hatch with watertight gasket seal, aluminum channel frame with drain coupling, backpainted, H-20 load capacity, complete stainless steel hardware including standard slam lock with security cover plug and recessed padlock clip. Contractor shall provide high security padlocks keyed to Owner standards. Contractor to extend drain to exterior or to sump.

   Use standard size single-leaf Bilco Type J-AL H20, Syracuse Castings Type DT-HD, Halliday Products Series H1W, or equal. Hatch sizes shall be as shown on the Contract Drawings.

2. Provide a hinged aluminum or FRP safety grate fall-through protection system at all hatches.

3. Provide a hinged aluminum or FRP safety grate fall-through protection system on existing hatches where noted on the Contract Drawings. Safety grate shall be Series X Retro-grate by Halliday Products, or equal.

S. Ladders - General

1. Rungs

a. Square or rectangular in profile with ridged or serrated non-slip top surface, capable of supporting a 300-lb. concentrated load at any point along the length of the rung without failure or permanent deformation.

b. Vertical spacing of rungs to be equal, from floor to upper landing, and not to exceed 12 inches.

c. Centerline of rungs to be 7 inches from wall or other surface or obstruction opposite climber.

d. Material to match side rails.

2. See Contract Drawings for specific configurations.

3. Ladders to conform in all respects to the requirements of OSHA 1910.27.

4. Side rails shall be supported by brackets with a maximum vertical spacing of 48 inches o.c. Secure brackets to wall with 5/8-inch diameter adhesive anchors, 4-inch minimum embedment.

5. Bolts to be Type 316 stainless steel, minimum 5/8-inch diameter.

T. Aluminum Ladders

1. 6061-T6 or 6063-T5 mill finish aluminum.

2. All welds and sharp edges to be ground smooth.

3. Side rails shall be 1/8-inch minimum thickness rectangular tube or channel in profile and to have minimum dimensions of 1-1/16 inches wide by 2-1/2 inches deep.

U. Provide stainless steel or aluminum telescoping safety post at all ladders below hatches, "Ladder UP" by Bilco, "Safety Post" or "Safety Extensions" by U.S.F. Fabrication, or equal.

V. Fall Protection

1. Provide fall protection safety harness rail or cable on ladders where noted on the Contract Drawings. Fall protection safety harness rail or cable shall be model Vi-Go with VGCS-SC by Miller, or equal.

2. Provide fall protection safety harness rail or cable on existing ladders where noted on the Contract Drawings. Fall protection safety harness rail or cable shall be model Vi-Go with VGCS-SC by Miller, or equal.

2.02 FINISHES

A. Prepare steel surfaces in accordance with SSPC SP-6.

B. Do not prime surfaces where field welding is required.

C. Galvanize in accordance with ASTM A123 or A153. Provide minimum 2.0 oz/sq.ft. galvanized coating.

D. Shop prime paint steel items, not galvanized, and top coat after installation.

E. Unless noted otherwise, aluminum shall be mill finish.

F. Aluminum in contact with concrete or masonry shall be backpainted with bituminous paint.

PART 3 EXECUTION

3.01 EXAMINATION

A. Ensure that field conditions are acceptable and are ready to receive work. Measurements and dimensions to be field verified.

B. Beginning of installation means Contractor accepts existing conditions.

3.02 FABRICATION

A. Fit and shop assemble in largest practical sections, for delivery to site.

B. Fabricate items with joints tightly fitted and secured.

C. Welds shall be continuous unless noted otherwise.

D. Exposed Mechanical Fastenings - Unobtrusively located, consistent with design of component.

E. Supply components required for anchorage of fabrications. Aluminum and fiberglass fabrications require stainless steel fasteners.

F. Fiberglass Fabrications - All cuts and drilled holes shall be sealed with vinyl ester resin to provide maximum corrosion resistance.

3.03 FABRICATION TOLERANCES

A. Squareness - 1/8-inch maximum difference in diagonal measurements.

B. Maximum Offset Between Faces - 1/16-inch.

C. Maximum Misalignment of Adjacent Members - 1/16-inch.

D. Maximum Bow - 1/8-inch in 48 inches.

E. Maximum Deviation From Plane - 1/16 inch in 48 inches.

3.04 INSTALLATION

A. Install items plumb and level, accurately fitted, free from distortion or defects.

B. Allow for erection loads, and for sufficient temporary bracing to maintain true alignment until completion of erection and installation of permanent attachments.

C. Perform field welding in accordance with AWS.

D. Fasten aluminum and/or fiberglass fabrications using Type 316 stainless steel bolts.

E. Carbon steel bolts shall only be used for carbon steel framing connections.

F. Isolate dissimilar metals with dielectric and appropriate fasteners.

G. Obtain Engineer approval prior to site cutting or making adjustments not indicated.

H. Prior to installation, aluminum surfaces in contact with concrete and/or masonry require backpainting.

I. After erection, touch up paint welds, bolts, connection material, and abrasions.

J. Top paint all exposed steel that is not galvanized.

K. Fiberglass Fabrications - All field cuts and drilled holes shall be sealed with vinyl ester resin as supplied by the manufacturer to provide maximum corrosion protection.

3.05 INSTALLATION TOLERANCES

A. Maximum Variation From Plumb - 1/4-inch.

B. Maximum Offset From True Alignment - 1/4-inch.

C. Maximum Out-of-Position - 1/4-inch.

END OF SECTION

SECTION 05505

CONCRETE AND MASONRY ANCHORS

PART 1 GENERAL

1.01 SECTION INCLUDES

A. Post-installed chemical adhesive anchor system for installing bolts and dowels into concrete and masonry.

B. Limited use of post-installed mechanical anchors in concrete and masonry

C. Cast-in anchors for attachment to concrete.

1.02 RELATED SECTIONS

A. Section 03200 - CONCRETE REINFORCEMENT
B. Section 03600 - GROUT
C. Section 05500 - MISCELLANEOUS FABRICATIONS

1.03 REFERENCES

ACI 355.1R	State-of-the-Art Report on Anchorage to Concrete
ASTM A36	Carbon Structural Steel
ASTM A153	Zinc Coating (Hot-Dip) on Iron and Steel Hardware
ASTM A307	Carbon Steel Bolts and Studs, 60 ksi Tensile Strength
ASTM A325	Structural Bolts, Heat Treated, 120/105 ksi Tensile Strength
ASTM A449	Hex Cap Screws, Bolts and Studs, Steel, Heat Treated, 120/105/90 ksi Minimum Tensile Strength, General Use
ASTM A615	Deformed and Plain Carbon-Steel Bars for Concrete Reinforcement
ASTM E488	Strength of Anchors in Concrete and Masonry Elements
ASTM E1512	Testing Bond Performance of Bonded Anchors
ASTM F593	Stainless Steel Bolts, Hex Cap Screws, and Studs
ASTM F594	Stainless Steel Nuts
ASTM F1554	Anchor Bolts, Steel, 36, 55, and 105-ksi Yield Strength
AWS A2.0	Standard Welding Symbols
AWS D1.1	Welding Code - Steel
ICC AC 308	Acceptance Criteria for Post-installed Adhesive Anchors in Concrete Elements

1.04 SUBMITTALS

A. Submit catalog cuts for chemical adhesive grout product to be used for anchoring bolts and dowels into concrete and masonry (as needed).

Catalog cuts shall include:

1. Tension and shear strength design values for each anchor size used on this project.

2. Manufacturer's installation instructions.

3. Allowable temperature range for proper anchor installation.

B. Submit the ICC-ES Evaluation Service Report (ESR) for proposed adhesive anchor system.

C. Submit data on adhesive anchor threaded rods to be used, including materials, sizes, lengths, etc.

1.05 QUALITY ASSURANCE

A. If the Contractor is not experienced in installing chemical adhesive anchors, a representative from the adhesive anchor manufacturer shall be present at start of project to instruct the Contractor how to properly install the adhesive anchors.

B. A sample of adhesive anchors shall be proof-loaded by an independent testing laboratory. The sample size and location(s) shall be determined by the Engineer. These test results shall be submitted to the Engineer.

C. Adhesive anchor systems shall have a current ICC-ES Evaluation Service Report that states recommended design capacities. Reports shall be performed in accordance with ICC AC 308 and ASTM E1512.

1.06 QUALITY ASSURANCE

A. Contractor shall coordinate the placement of anchor bolts with approved items and miscellaneous fabrications.

PART 2 PRODUCTS

2.01 MATERIALS

A. Adhesive anchor system shall be a high-strength, premeasured, two-part, self-mixing, cartridge-type adhesive such as "HIT HY-150" by Hilti, Inc.; "Epcon G5" by ITW Red Head, "Epoxy-Tie Adhesive" by Simpson; Strong-Tie Company, Inc.; or equal.

B. Mechanical Anchors - Mechanical (expansion-type) anchors are not allowed unless specifically requested (for a special application) by the Contractor and approved by Engineer in writing.

C. Cast-in Anchor Rods (Bolts) - F1554 anchor rods (galvanized to ASTM A153). Use 3/4-inch diameter rods (L-bolts) bent 90 degrees with 3-inch hook. Anchor rods shall be 18 inches long or as shown on the Contract Drawings.

D. Stainless Steel Threaded Rods - ASTM A593, Type 316.

E. Stainless Steel Nuts - ASTM A594, Type 316.

F. Reinforcing Steel Dowels - ASTM A615, Grade 60 deformed bar.

G. All threaded rods and anchor bolt accessories, including nuts, washers, etc. shall be of the same material as the rods/bolts.

PART 3 EXECUTION

3.01 INSTALLATION OF ADHESIVE ANCHOR SYSTEMS

A. All bolted connections to concrete and masonry shall utilize an adhesive anchor system as specified above.

B. Threaded stainless steel rods shall be used for all anchor bolt applications, unless noted otherwise in the Contract Documents.

C. Provide templates or other means to accurately locate anchors.

D. Drilled holes shall be cleaned out and shall be fee of dust and trapped water.

E. Masonry anchors shall be installed in grout-filled cores. In existing construction where masonry cores cannot be grout-filled, manufacturer's masonry screen tubes shall be used to install anchors.

F. Install adhesive anchors in accordance to manufacturer's recommendations.

G. Anchor bolts installed into concrete and masonry shall not be closer than 6 inches o.c.

H. All structural members bolted to concrete and masonry shall be made with a minimum of two 5/8-inch diameter anchors at each end of member, unless noted otherwise.

I. Anchor bolts and dowels shall be clean and free of coatings or other contaminants that would impair bonding to the chemical adhesive.

J. Threaded rods shall extend through the entire depth of nut and shall not project more than 1/2 inch beyond the top of nut.

K. Anchor bolts shall not be installed in concrete less than seven days old or as recommended by the manufacturer.

L. Adhesive anchors shall be fully cure prior to applying load on anchor.

3.02 INSTALLATION OF CAST-IN ANCHORS IN CONCRETE

A. All cast-in anchors shall be hot-dip galvanized, unless noted otherwise in the Contract Documents.

B. Provide templates or other means to accurately place anchors.

C. Anchors shall be secured in place to not allow displacement during placement of concrete.

D. Concrete shall be thoroughly vibrated around the anchors for proper bonding of the anchors.

E. Anchor rods shall extend through the entire depth of nut and shall not project more than 1/2 inch beyond the top of nut.

F. Concrete shall be at full 28-day compressive strength prior to applying load on anchor.

END OF SECTION

SECTION 09900

FIELD PAINTING

PART 1 GENERAL

1.01 SUMMARY

A. This Section includes Field Painting of all work indicated on the Contract Drawings and specified herein.

B. Do not paint prefinished items, concealed spaces, finished metal surfaces, operating parts, and labels.

1.02 REFERENCES

A. Materials and installation shall be in accordance with the latest revisions of the following codes, standards and specifications, except where more stringent requirements have been specified herein:

1. American Society for Testing and Materials (ASTM)

a. C2246 - Freeze-Thaw Test
b. D2247 - Humidity Test
c. B117 - Salt Spray Test
d. E84 - Surface Burning Characteristics Test
e. D16 - Definitions of Terms Relating to Paint, Varnish, Lacquer, and Related Products
f. D2805 - Contrast Ratio
g. D1308 - Stain Resistance
h. D4060 - Abrasion
I. D4541 - Adhesion
j. D522 - Conical Mandrel Elongation

2. Steel Structures Painting Council (SSPC)

a. Steel Structures Painting Manual, Volume 2, Systems and Specifications.

1.03 QUALITY ASSURANCE

A. All materials shall remain in their original containers with manufacturer's label intact. Manufacturer's name, product name and number, and color and batch number, shall appear on the label.

B. Manufacturer's representative shall be available to advise applicator on proper application techniques and procedures.

1.04 SUBMITTALS

A. Submittals shall be submitted in accordance with the provisions set forth in the Special Project Conditions, General Provisions and General Specifications.

B. In addition to those submittals identified in the Special Project Conditions, General Provisions, and General Specifications, the following items shall be submitted:

1. Manufacturer's descriptive data fully describing each product to include solids by volume and V.O.C. ratings.

2. Manufacturer's certification that all materials furnished are in compliance with the applicable requirements of the referenced standards and this specification.

3. Manufacturer's application instructions.

4. Color charts illustrating range of colors and textures available for selection.

PART 2 PRODUCTS

2.01 MANUFACTURERS

A. The following manufacturers are named to establish a standard of quality necessary for the Project:

1. Porter International
2. Tnemec Company
3. Benjamin Moore & Co. (Benjamin Moore)
4. ICI Paint, Inc.(DuluxPaint)
5. PPG Industries Inc.(Pittsburgh Paints)
6. Sherwin- Williams Co. (Sherwin-Williams)

2.02 GENERAL

A. Coatings shall be applied per manufacturer's recommendations.

B. All coordination for compatibility between shop primers, shop finish coats, field coats, and possible tie coats, shall be the responsibility of the Contractor.

C. All field surfaces prepared for field painting will be reviewed by the Engineer before coating application begins.

D. All coatings specified herein are in addition to shop coatings specified elsewhere.

E. Apply coatings with a brush or a roller. Spray paint only where scheduled or with Engineer's review.

F. Clean damaged shop coatings and retouch before any successive field painting is performed.

2.03 EXTRA STOCK

A. One gallon of unopened paint, in each type and color specified, shall be furnished to the Owner. Multi-component paints shall be supplied as a complete kit.

PART 3 EXECUTION

3.01 PRE-APPLICATION

A. Examine surfaces to be coated and report any conditions that would adversely affect the appearance or performance of the coating systems, and which cannot be put into an acceptable condition by the preparatory work specified.

B. The Contractor shall insure that moisture content of surfaces is within manufacturer's recommendations.

3.02 SURFACE PREPARATION

A. General

1. Remove dust and loose material by dusting, sweeping, vacuuming, or blowing with high-pressure air.

2. Remove oil, wax, and grease in accordance with the manufacturer's recommendations.

3. Verify with Owner's representative that all surfaces to be coated are dry, clean, and free from dirt, dust, wax, grease, or other contaminants.

4. Remove electrical plates, hardware, light fixtures, trim, and fittings prior to preparing surfaces.

5. Shellac and/or seal marks which may bleed through surface finishes that could not be removed.

B. Metals

1. Prepare all non-primed metal surfaces in accordance with the Steel Structures Painting Manual.

a. Sandblasting shall conform to the Steel Structures Painting Council Surface Preparations Specifications for near-white blast cleaning (SSPC-SP 10) and commercial blast cleaning (SSPC-SP 6).

b. Before blast cleaning begins, the Contractor shall prepare a sample which shall correspond to the photographic standards of SSPC.

c. Proportions of sand, grit, or shot shall be adjusted as necessary to produce a prepared surface equivalent to the reviewed sample.

d. Applications of protective coatings shall be within 8 hours after blast cleaning.

e. Surfaces showing any traces of rust shall be blasted again before application of protective coatings.

f. In areas where assemblies are to receive a sandblasted surface preparation, and portions of the assembly have been previously coated, all prior coatings shall be removed by blast cleaning to the extent necessary for proper adhesion of the specified coating.

2. Shop Primed Metals or Ferrous Metals

a. SSPC-SP3-Power Tool Clean field connections, welds, burned, and abraded areas to remove rust and contaminants; touch up with specified primer. Feather edges to make patches inconspicuous where exposed to view.

3. Ferrous Metal - Submerged Service

a. SSPC-SP10 - Near White Blast Clean

4. Ferrous Metal - Non-Submerged Service

a. SSPC-SP6 - Commercial Blast Clean

5. Non-Ferrous Metal

a. SSPC-SP1 - Solvent Cleaning

6. Galvanized Metal

a. SSPC-SP1 - Solvent Cleaning.

b. SSPC-SP3 - Power Tool Clean, white rust; Care shall be taken not to damage or remove galvanizing.

C. Concrete and Masonry

1. Allow new concrete and masonry to cure 28 days.

2. Patch holes and cracks in the concrete flush with the surface using a portland cement grout patching material or equivalent.

3. Clean mortar joints

4. Remove stains caused by weathering or corroding metals by cleaning with manufacturer Os approved methods.

5. Verify required acid/alkali balance and allowable moisture content of material.

6. Brush Off Blast Cleaning: The surface shall be lightly abraded without entirely removing the surface or exposing the underlying aggregates. The cleaned surface shall have the uniform texture of 100 grit medium sandpaper.

7. For concrete floors: Acid etch, whip blast, or mechanical shot blast in accordance with paint manufacturers recommended procedures.

D. Impervious Surfaces

1. Remove mildew and mold in accordance with the manufacturer's recommendation.

3.03 APPLICATION

A. Mix and thin material in accordance with the manufacturer's printed instructions.

B. Allow each coat to dry thoroughly before recoating.

C. Vary color slightly to indicate each successive coating.

D. Cut in edges clean and sharp where work joins other materials or colors.

E. Make finish coats smooth, uniform in color, and free of brush marks, laps, runs, dry spray, overspray, and missed areas.

F. Where clear finishes are required, tint fillers to match wood. Work fillers into the grain before set. Wipe excess from surface.

G. Prime back surfaces of interior and exterior woodwork with primer paint.

H. Prime back surfaces of interior woodwork scheduled to receive stain or varnish finish with gloss varnish reduced 25 percent with mineral spirits.

3.04 UNCOATED MATERIALS AND ITEMS

A. Glazed wall finishes, special coatings, and floor finishes are specified elsewhere.

B. Surfaces not requiring protective coatings:

1. Brass, Aluminum, PVC, Bronze, Copper, FRP, stainless steel and rubber.

3.05 SCHEDULE FOR PAINTING AND FINISHING

Legend

(1) Brush or roller application and spray application on metal deck and bar joist ceiling may require two coats to achieve required mil thickness.

(2) Actual film thickness will depend on porosity of surface.

(3) Dry Film Thickness (D.F.T.).

A. Steel-Structural, Tanks, Pipes and Equipment

1. Exterior, Non-Immersion

Porter	D.F.T.(3)
Surface Preparation: SSPC-SP6	
1st Coat: 7500 Magna-Prime (1)	3.0 - 5.0
2nd Coat: 7510 Magna-Coat (1)	4.0 - 6.0
3rd Coat: 8610 Hythane Super	3.0 - 4.0
	10.0 - 15.0

Tnemec	D.F.T.(3)
Surface Preparation: SSPC-SP6	
1st Coat: 66-1211 Hi-Build Epoxoline (1)	3.0 - 5.0
2nd Coat: 66-color Hi-Build Epoxoline (1)	4.0 - 6.0
3rd Coat: 74/75-color Endura-Shield	2.0 - 3.0
	9.0 - 14.0

2. Interior, Non-Immersion

Porter	D.F.T.(3)
Surface Preparation: SSPC-SP6	
1st Coat: 7500 Magna-Prime (1)	3.0 - 5.0
2nd Coat: 7510 Magna Coat (1)	4.0 - 6.0
3rd Coat: 7510 Magna Coat (1)	4.0 - 6.0
	11.0 - 17.0

Tnemec	D.F.T.(3)
Surface Preparation: SSPC-SP6	
1st Coat: 66-1211 Hi-Build Epoxoline (1)	3.0 - 5.0
2nd Coat: 66-color Hi-Build Epoxoline (1)	4.0 - 6.0
3rd Coat: 66-color Epoxoline (1)	4.0 - 6.0
	11.0 - 17.0

3. Immersion, Non-Potable Water

Porter	D.F.T.(3)
Surface Preparation: SSPC-SP10	
1st Coat: 65 High Solids Epoxy (1)	6.0 - 8.0
2nd Coat: 65 High Solids Epoxy (1)	6.0 - 8.0
	12.0 - 16.0

Tnemec	D.F.T.(3)
Surface Preparation: SSPC-SP10	
Roughen the surface before topcoating if the 104-1211 has been exposed exterior for 14 days or longer.	
1st Coat: 104-1211 H.S. Epoxy (1)	8.0 - 10.0
2nd Coat: 104-color H.S. Epoxy (1)	8.0 - 10.0
	16.0 - 20.0

4. Low Temperature Curing Applications

Porter	D.F.T.(3)
Surface Preparation: SSPC-SP6	
1st Coat: FR-51	3.0 - 5.0
2nd Coat: FR-51	4.0 - 6.0
3rd Coat: FR-51 (Interior)	4.0 - 6.0
or 3rd Coat: 8610 Hythane Super (exterior)	3.0 - 4.0
	11.0 - 17.0
	or
	10.0 - 15.0

Tnemec	D.F.T.(3)
Surface Preparation: SSPC-SP6	
1st Coat: 161-1211 Tneme-Fascure (1)	3.0 - 5.0
2nd Coat: 161-color Tneme-Fascure (1)	4.0 - 6.0
3rd Coat: 161-color Tneme-Fascure (1) (interior)	4.0 - 6.0
or 3rd Coat: 74/75 End.-Shield (exterior)	2.0 - 3.0
	11.0 - 17.0
	or
	9.0 -14.0

B. Galvanized Steel, Non-Ferrous Metal, Pipe, Roof Deck and Miscellaneous Fabrications

1. Exterior, Non-Immersion

Porter	D.F.T.(3)
Surface Preparation: SSPC-SP1	
1st Coat: MCR 4351 HB (1)	4.0 - 6.0
2nd Coat: 8610 Hythane Super	3.0 - 4.0
	7.0 - 10.0

Tnemec	D.F.T.(3)
Surface Preparation: SSPC-SP1	
1st Coat: 66-color Hi-Build Epoxoline (1)	4.0 - 6.0
2nd Coat: 74/75-color Endura-Shield	2.0 - 3.0
	6.0 - 9.0

2. Interior, Non-Immersion

Porter	D.F.T.(3)
Surface Preparation: SSPC-SP1	
1st Coat: MCR 4351 H.B. (1)	4.0 - 6.0
2nd Coat: MCR 4351 H.B. (1)	4.0 - 6.0
	8.0 -12.0

Tnemec	D.F.T.(3)
Surface Preparation: SSPC-SP1	
1st Coat: 66-color Hi-Build Epoxoline (1)	4.0 - 6.0
2nd Coat: 66-color Hi-Build Epoxoline (1)	4.0 - 6.0
	8.0 - 12.0

C. Ferrous piping, valves, operators, misc. appurtenances installed within the pipeline. All of the following systems are for the coating of the exterior of pipe, valves, etc. only.

1. Interior, Immersion, Non-Potable

Porter	D.F.T.(3)
Surface Preparation: SSPC-SP10	
1st Coat: 7500 Magna-Prime (1)	3.0 - 5.0
2nd Coat: 7510 Magna Coat (1)	4.0 - 6.0
3rd Coat: 7510 Magna Coat (1)	4.0 - 6.0
	11.0 - 17.0

Tnemec	D.F.T.(3)
Surface Preparation: SSPC-SP10	
1st Coat: 66-1211 Hi-Build Epoxoline (1)	3.0 - 5.0
2nd Coat: 66-color Hi-Build Epoxoline (1)	4.0 - 6.0
3rd Coat: 66-color Hi-Build Epoxoline (1)	4.0 - 6.0
	11.0 - 17.0

2. Interior, Non-Immersion

Porter	D.F.T.(3)
Surface Preparation: SSPC-SP6	
1st Coat: 7500 Magna - Prime (1)	3.0 - 5.0
2nd Coat: 7510 Magna Coat (1)	4.0 - 6.0
	7.0 - 11.0

Tnemec	D.F.T.(3)
Surface Preparation: SSPC-SP6	
1st Coat: 66-color Hi-Build Epoxoline (1)	3.0 - 5.0
2nd Coat: 66-color Hi-Build Epoxoline (1)	4.0 - 6.0
	7.0 - 11.0

3. Exterior, Non-Immersion

Porter	D.F.T.(3)
Surface Preparation: SSPC-SP6	
1st Coat: 7500 Magna - Prime (1)	3.0 - 5.0
2nd Coat: 7510 Magna Coat (1)	4.0 - 6.0
3rd Coat: 8610 Hythane Super	3.0 - 4.0
	10.0 - 15.0

Tnemec	D.F.T.(3)
Surface Preparation: SSPC-SP6	3.0 - 5.0
1st Coat: 66-1211 Hi-Build Epoxoline (1)	4.0 - 6.0
2nd Coat: 66-color Hi-Build Epoxoline (1)	2.0 - 3.0
3rd Coat: 74/75 - color Endura-Shield	9.0 - 14.0

4. Exterior, Below Grade

Porter	D.F.T.(3)
Surface Preparation: Clean and Dry	
1st Coat: 7080 Tarset Maxibuild	16.0 - 20.0
	16.0 - 20.0

Tnemec	D.F.T. (3)
Surface Preparation: Clean and Dry	
1st Coat: 46H-413 Hi-Build Tneme-Tar (1)	16.0 - 20.0
	16.0 - 20.0

D. Galvanized, Non-Ferrous, Wrought piping, valves, operators, misc. appurtenances installed within the pipeline. All of the following systems are for the coating of the exterior of pipe, valves, etc. only.

1. Exterior, Non-Immersion

Porter	D.F.T.(3)
Surface Preparation: SSPC-SP1	
1st Coat: MCR 4351 HB (1)	4.0 - 6.0
2nd Coat: 8610 Hythane Super	3.0 - 4.0
	7.0 -10.0

Tnemec	D.F.T. (3)
Surface Preparation: SSPC-SP1	4.0 - 6.0
1st Coat: 66-color Hi-Build Epoxoline (1)	2.0 - 3.0
2nd Coat: 74/75-color Endura-Shield	6.0 - 9.0

2. Exterior, Below Grade

Porter	D.F.T.(3)
Surface Preparation: Clean and Dry	
1st Coat: 7080 Tarset Maxibuild	16.0 - 20.0
	16.0 - 20.0

Tnemec	D.F.T. (3)
Surface Preparation: Clean and Dry	
1st Coat: 46H-413 Hi-Build Tneme-Tar (1)	16.0 - 20.0
	16.0 - 20.0

3. Interior, Non-Immersion

Porter	D.F.T.(3)
Surface Preparation: SSPC-SP6	
1st Coat: 7500 Magna - Prime (1)	3.0 - 5.0
2nd Coat: 7510 Magna Coat (1)	4.0 - 6.0
	7.0 - 11.0

Tnemec	D.F.T. (3)
Surface Preparation: SSPC-SP6	
1st Coat: 66-color Hi-Build Epoxoline (1)	3.0 - 5.0
2nd Coat: 66-color Hi-Build Epoxoline (1)	4.0 - 6.0
	7.0 - 11.0

4. Interior, Immersion, Non-Potable

Porter	D.F.T.(3)
Surface Preparation: SSPC-SP10	
1st Coat: 7500 Magna - Prime (1)	3.0 - 5.0
2nd Coat: 7510 Magna Coat (1)	4.0 - 6.0
3rd Coat: 7410 Magna Coat (1)	4.0 - 6.0
	11.0 - 17.0

Tnemec	D.F.T. (3)
Surface Preparation: SSPC-SP10	
1st Coat: 66-1211 Hi-Build Epoxoline (1)	3.0 - 5.0
2nd Coat: 66-color Hi-Build Epoxoline (1)	4.0 - 6.0
3rd Coat: 66-color Hi-Build Epoxoline (1)	4.0 - 6.0
	11.0 - 17.0

END OF SECTION

SECTION 11296

CONVEYANCE FLUSHING SYSTEM

PART 1 GENERAL

1.01 SUMMARY

A. This Section includes furnishing and installing a conveyance flushing system complete with embedded anchors, flushing gates, gate frames, hydraulic supply lines with anchors, preassembled hydraulic power pack unit, control panel, level sensors, and all other necessary appurtenances in compliance with the Contract Documents.

1.02 RELATED SECTIONS

A. Section 03300 Cast-in-Place Concrete
B. Section 05500 Miscellaneous Fabrications
C. All Division 16 Specifications
D. Section 17105 Fiber Optic Communications Systems

1.03 REFERENCES

A. Material and installation shall be in accordance with the latest revisions of the following codes, standards, and specifications, except where more stringent requirements are specified herein:

1. American Society for Testing and Materials (ASTM)
2. American National Standards Institute (ANSI)
3. American Society of Mechanical Engineers (ASME)
4. Canadian Standards Association (CSA)

1.04 SUBMITTALS

A. Submittals shall be in accordance with the provisions set forth in the Special Project Conditions, General Provisions, and General Specifications.

B. Prior to obtaining any material in connection with this Section, detailed shop drawings shall be submitted. In addition to other requirements, submit load calculations to indicate UPS sizing complies with the UPS backup time requirements.

C. Other Submittals

1. Operation and maintenance manual in accordance with the Special Project Conditions and the General Specifications.

2. Manufacturer's performance affidavit in accordance with the Special Project Conditions.

1.05 QUALITY ASSURANCE

A. Design - The flushing gates and appurtenances shall be designed for installation in the flushing chamber structures as shown on the Contract Drawings. The conveyance flushing system must be designed to provide effective flushing under the following conditions:

	CONVEYANCE FLUSHING CHAMBER A	CONVEYANCE FLUSHING CHAMBER B
Flushway Length	600 feet	500 feet
Flushway Width	144-inch diameter	96-inch diameter
Flushway Slope	0.0017 ft/ft	0.0024 ft/ft

B. Workmanship - All work shall be performed in accordance with the best modern practice for the manufacture of high-grade machinery. All parts shall conform accurately to the design dimensions and shall be free of all defects in workmanship or material that shall impair their service. The flushing gates shall be completely shop assembled to insure proper fit and adjustment of all parts.

1.06 DELIVERY, STORAGE, AND HANDLING

A. The conveyance flushing system and all appurtenances shall be handled and stored in accordance with manufacturer's instructions and requirements.

1.07 WARRANTY

A. The conveyance flushing system and all appurtenances shall be warranted in accordance with General Provisions G-1.13.

B. In addition to the Contractor's warranty period identified in General Provisions G-1.13, the conveyance flushing system (the embedded anchoring system, the frame, the gate, the locking and sealing mechanism, the hydraulic cylinder the hydraulic tubing, the hydraulic pump, reservoir, valves and mechanical connections) shall be warranted by the flushing gate manufacturer for five years from the

date of beneficial occupancy. The electronic control panel, PLC, fiber optic patch panel, Ethernet switch, level transmitters/transducers, expansion modules, solenoids, motor, relays, timers, level sensors and all other electronic components supplied by the flushing gate manufacturer shall be warranted for two years from the date of beneficial occupancy.

PART 2 PRODUCTS

2.01 MANUFACTURER

A. The flushing gates shall be HydrOself Model HS-20 as manufactured by Gabriel Novac & Associates, Inc.(GNA), or approved equal.

B. The manufacturer shall have at least five (5) years experience in sizing, designing, fabricating and installing the equipment specified herein. Suppliers shall have furnished equipment to a minimum of (10) presently operating facilities utilizing similar flushing gates, at least four (4) of which are presently operating in North America.

2.02 EQUIPMENT

A. Each flushing gate shall be constructed of Type 316 stainless steel. The welds shall be sized to withstand both the static and dynamic loading experienced under normal operation and installation conditions.

2.03 SUPPORTS AND ANCHORS

A. The flushing gate supports shall be fabricated entirely of Type 316 stainless steel, and anchored to walls using anchors, T-bolts and hardware fabricated entirely of Type 316 stainless steel. The support systems must be designed to withstand both static and dynamic loads.

B. Supports and anchors shall be as specified by the flushing gate manufacturer.

C. Frames and anchoring channels for the flushing gates shall be continuous and of Type 316 stainless steel. The channels used to form the continuous type frame, shall have an ASTM 153 finish and minimum yield strength of 32,000 psi. Frames, channels and other

anchoring equipment shall be in accordance with the manufacturer's requirements, instructions, and recommendations. After installation of the frame and all required hold down and attachment hardware, and prior to installation of flushing gates, the frame installation shall be inspected by the gate manufacturer's representative. Any deficiencies or variations from the manufacturer's requirements and recommendations noted by the manufacturer's representative shall be corrected by the Contractor at no additional cost to the Owner. The manufacturer's representative shall provide a written copy of the frame inspection report to the Owner's Representative.

2.04 HINGES AND LOCKING DEVICE

A. The flushing gate hinge mechanism shall be designed to withstand all operational forces, to allow for full travel and permit manual lifting of gate flap to a minimum of 135° degrees from the vertical plane (when the gate is fully closed). The hinges shall be adjustable in two directions. Material for hinges shall be Type 316 stainless steel and bronze only. The hinges MUST be flexible and open uniformly across the entire length of the unit

B. The flushing gate locking mechanism shall be constructed entirely of Type 316 stainless steel and bronze. It shall be made of parts which are easily removable and interchangeable with no damage to gates whatsoever and no special tools shall be required for this operation. A universal key shall be the only tool necessary.

2.05 HYDRAULIC COMPONENTS

A. There shall be only one hydraulic cylinder and one hydraulic line for each gate. The hydraulic cylinder shall be constructed entirely of Type 316 stainless steel. The hydraulic cylinder will be constructed to withstand the operating pressure of the system and will require no more than 225 psi to release or open the locking mechanism. The cylinder shall be completely sealed and leak proof.

B. The flushing gate must be closed at all times unless it is in the operating cycle.

C. NO HYDRAULIC PRESSURE SHALL BE USED to lock the gates or to keep the gates closed.

D. There shall be no sealing material inside or in the operating shaft. The hydraulic cylinder will have no mechanical or friction seals, no pistons rings or sealed shaft. It will not have any sliding metal parts that can allow leakage and will not be equipped with rubber or plastic bellows.

E. Hydraulic fluid shall be supplied and be as required by the flushing gate manufacturer. The minimum characteristics are as follows:

Viscosity @ 40°C (104°F) shall be no less than 26.9 centistokes.

Viscosity @ -40°C (104°F) shall be no less than 85.0 centistokes.

F. The hydraulic pipelines will be 3/8 inch diameter and will be made entirely of Type 316 stainless steel PVC coated material.

G. All couplings will be quick connect type made entirely of Type 316 stainless steel. The hydraulic lines anchoring system, the mounting rails, struts and rail nuts, weld plates and support kits shall be fabricated in Type 316 stainless steel.

2.06 EQUIPMENT ENCLOSURE

A. The conveyance flushing system controls and hydraulic power pack shall be installed inside a NEMA 4X rated (type 316 stainless steel, 10 ga.) outdoor equipment enclosure which shall be pad mounted above grade at the location indicated on the Contract Drawings.

B Equipment enclosure shall be large enough to house all mechanical, electrical, instrumentation, PLC and appurtenances as shown in the Contract Documents. Equipment enclosure shall be at least 60" high by 48" wide by 16" deep. Mechanical equipment (motors, hydraulic power pack, solenoid valves, etc) shall be physically isolated from other equipment (electrical, instrumentation, PLC, etc.) within the equipment enclosure. Flushing system supplier shall coordinate with the fiber optic communications supplier to provide adequate space in the equipment enclosure for mounting and connection of SCADA networking equipment installed within the equipment enclosure. The cabinet shall be provided with vent slots, lockable hasp, and

thermostatically regulated heater for condensation control. No pilot devices shall be mounted on the exterior doors of the enclosure including the HMI.

C. Equipment enclosure and shall be constructed in accordance with Division 16 specifications.

2.07 HYDRAULIC POWER PACK

A. The hydraulic power pack consists of the electric motor, hydraulic fluid pump, reservoir, solenoid operated valves, the electronic and analog systems alarms.

B. The power pack will be manually operable using push button controls located on an inner door of the enclosure. The panel will be equipped with a key operated selector switch for local or remote operation. It will also be equipped with alarm lights, power light, mode light, sump storage water level lights, light test button and buttons for the manual operation of the flushing gates.

C. The hydraulic power pack enclosure will house the following:

- One 3/4 hp electric motor, 480 VAC, 3 phase, 60 Hz motor.
- One two (2) gallon hydraulic fluid reservoir.
- Two (2) normally closed, triple ported, solenoid operated, hydraulic valves.
- One (1) normally open, double ported, solenoid operated, hydraulic valve
- One (1) hydraulic fluid low level switch.
- One (1) hydraulic fluid high temperature switch.
- One (1) hydraulic fluid low pressure (when motor is operating) switch.
- One (1) adjustable pressure relief valve.
- One (1) aluminum manifold to mount all solenoid operated valves and pressure relief valve.
- One (1) gear pump with a capacity of 0.71 gals at 1000 rpm.
- One temperature and level gauge.
- One pressure gauge from 0 to 20 bar.

- One enclosure to house all PLC and SCADA communications equipment, electrical components, terminal connections, intrinsically safe barriers, one voltage transformer, motor contactor and overload protection and other items noted in 2.08 SYSTEM CONTROLS.

2.08 SYSTEM CONTROLS

A. The PLC-based control panel will control the local flushing of the system from a series of virtual pushbuttons displayed on a Human Machine Interface (HMI). The HMI shall be an Allen Bradley PanelView Plus 700 with an Ethernet communications and RS-232 printer port. Operator interaction shall be through virtual selector switches, pushbuttons, indicator lights and displayed on color graphic screens, unless otherwise noted. It will be equipped with a PLC and a three position key operated selector switch which will allow for MANUAL/OFF/AUTO operation. The control panel enclosure will house both the previously described hydraulic equipment and the electronic components. A second enclosure within the first will separate the electronic components from the hydraulic ones. The enclosure will be sized to accommodate all of the equipment required and shall be provided in accordance with Section 16161, Control Panels and Enclosures. It will be equipped with a main breaker and fuses.

   The HMI shall incorporate virtual status light indicators for the system, which will show if the system is "on" or "off", "local" or "remote" mode, "manual" or "automatic" flushing. The HMI shall also display alarms for each of the following; low oil level, high oil temperature, low oil pressure alarm. All alarms will be manually reset via the HMI. The HMI shall also provide operator access to operator adjustable set points, conveyance and flushing gate system levels.

B. The PLC shall be manufactured by Allen Bradley, SLC 5/05. The PLC shall be configured with an Ethernet port to allow connection to the Owner's existing SCADA system, as noted on the Contract Drawings. The PLC shall be designated as PLC M83, to maintain consistency with the Owner's SCADA System configuration.

The PLC shall convert all raw data to appropriate engineering units. Equipment runtime, equipment status, monitoring and control shall all be maintained through the PLC.

I/O Point Configuration
Shall be consistent with the Owner's existing SCADA I/O scheme and shall be used to identify all physical points within the PLC, as presented as follows:

Example point ID: S##LLCPP

S = County Service Area, e.g. - B = B'ville, C = Brewerton, L = Meadowbrook-Limestone, F = Oak Orchard, G = Wetzel Road, M = Metro

= PLC number within the Rack. The Owner shall provide PLC number(s) to be assigned to prevent conflicts with Owner's existing PLCs. The Owner shall also provide the IP address.

LL = Logical Rack within the PLC

C = PLC card # within the Logical Rack

PP = Physical I/O Point on Card

i.e. M0701103 would be a PLC I/O point at Metro in PLC #07 on a card in logical rack 01, Card # 1, third point (03) on card.

Virtual Points associated with the physical I/O shall be configured by additional descriptive tagging. i.e.: M0701103_virtual_point_tag

The PLC shall store all data within its own memory completely configured and ready to be accessed by the supervisory software program without further modification within the supervisory program. Reserved data tables shall be used for all data exchange between PLC and HMI. Elements and bits shall be utilized in a contiguous structure in order to maintain data transfer efficiency.

Point and program design shall follow standard design currently employed by the County. Sample programs are available, at County's discretion.

PLC programmer shall develop a batch file so that PLC set points may be uploaded to the PLC from the Owner's Cimplicity-base supervisory software in the event of PLC failure.

PLC diagnostics shall be provided. As a minimum, provide communication failure alarms, low memory battery alarms, PLC panel power loss alarms, and PLC UPS and battery low alarm.

At the time of first submission of shop drawings, the contractor shall supply a complete listing of PLC points and corresponding PLC register addressed to the Engineer and Owner so that the data can be accessed via the Owner's existing Cimplicity-based SCADA system. Remit I/O matrices to the Engineer and Owner as an electronic Microsoft Excel file. I/O matrices shall identify the PLC memory location for each data point in the PLC (including virtual), description of the data point, state of the data point is active (for discrete), scaling of all analog data points, engineering units for all analog data points, and additional clarifications on the I/O matrices or PLC function as requested by the Engineer or Owner.

C. The PLC control panel shall incorporate the following features:

1. All I/O shall be wired to terminal strips. Where relays, intrinsically safe barriers and/or surge protection for I/O are required, wiring shall be from the I/O module to the relay, barrier, or surge protector to the terminal strip.

2. Provide intrinsically safe barriers for I/O originating in hazardous areas as indicated on the Contract Drawings. Installation and separation of wiring shall be in full accordance with the latest revision of the NEC.

3. Provide surge protection for all I/O originating from outside of the enclosure. Surge protection shall be located on a separate DIN rail from the terminal strips.

4. Provide loop power to analog inputs if required.

5. Provide 120VAC power for discrete outputs where required.

6. Provide 24VDC power supplies required by field devices.

D. The HMI shall be door-mounted on the enclosure inner door. Provide gasketed mounting kits. Height of centerline shall be between 4 feet 9 inches and 5 feet 0 inches above finished floor. Provide sufficient memory for a minimum of 10 screens. As a minimum, the following screens shall be provided:

1. Overview screen showing operational status of the flushing system/CSO 044 systems.

2. Alarm screen.

3. Setpoint screen.

4. PLC operating status screen.

5. Any other screens as required.

Provide one licensed copy of the HMI development software provided by the HMI manufacturer.

E. The control panel will be located in an outdoor equipment enclosure as shown on the Contract Drawings. This panel will allow for manual operation (push button) of the flushing system, so that any of the gates may be released. It will be equipped with a three way key operated selector switch (MANUAL/OFF/AUTO) which can be locked in any of the three positions. Once a flush is started the control panel will not accept another signal, other than abort, until the flush is completed. It will be equipped with virtual HMI status indicator showing which flushing gate is operating. The panel will also be equipped with virtual indicator lights to show if high water level (HWL) conditions exist in the storage areas or the sumps. The panel will meet specifications for installation in NEMA 4X environment.

The control panel shall be provided with an uninterruptible power supply (UPS) to allow the PLC, communications devices, and level instrumentation to remain powered for a minimum of 30 minutes after a power failure. Submit loading calculations to indicate compliance.

F. The PLC will be used to control the duration of the flush by using various internal timers and relays and by taking the water level in the sump into consideration. It will use the signal from the water level indicator, located in the sump. The level indicator will be equipped with intrinsically safe circuits to render it explosionproof.

G. The Contractor shall furnish and install, ready to operate, the following level sensing systems, complete with all necessary accessories, to monitor as indicated herein in compliance with the following specifications and as shown on the Contract Drawings. Level transmitter shall be installed in the flushing chamber system control panel.

SCHEDULE OF ULTRASONIC LEVEL SENSORS

SERVICE NAMEPLATE DESIGNATION	EQUIPMENT DESIGNATION	UNITS
CSO 044 level transmitter	LIT-8301	Feet
CSO 044 regulator level	LE-8301A	----
(Future site level)	LE-8301B	----
Flushing Chamber A&B level transmitter	LIT-8300	Feet
Flushing Chamber A level transducer	LE-8300A	----
Flushing Chamber B level transducer	LE-8300B	----

H. Contractor is responsible to verify with the supplier that the ultrasonic transducer and transmitter are mounted in locations that do not compromise their integrity. Echo obstructions (structure walls, mixer, ladder rungs, etc.) and temperature limitations shall be considerations. Any such deviation from that which is specified shall be brought to the Engineer's attention during shop drawing submittals.

I. The level sensors and all appurtenances shall be warranted in accordance with General Provisions G-1.13. In addition to the Contractor's warranty period identified in General Provisions G-1.13, the level sensors shall be warranted by the manufacturer for two years.

J. The level sensing equipment shall be the following or equal:

1. Siemens Model HydroRanger 200; level transmitter with diagnostic and configuration software with Model XPS-15F transducers for hazardous areas.

2. Pulsar Model Series Ultra Twin level transmitter with diagnostic and configuration software and Model Series dB transducer for hazardous areas.

K. Ultrasonic Sensors/Transducer

1. The transducer shall serve as a combination transmitter and receiver designed to emit a conical ultrasonic beam onto a surface and receive the echo that is generated.

2. Provide transducers for each transmitter listed as "LIT." Provide one spare transducer.

3. The transducer shall be a seamless, hermetically sealed, chemical-resistant, Kynar-encapsulated unit.

4. The transducer shall be non-contact design and include no moving parts or mechanical linkages.

5. Ultrasonic depth transducer shall compensate for changes in the speed of sound caused by air temperature variation.

6. Ultrasonic depth transducer shall be capable of operating at ambient temperatures from -40 to 203 degrees F.

7. Transducers shall be provided suitable for use in Class I, Division 1, Groups C and D hazardous environments.

8. Provide submergence shields on all transducers.

L. Ultrasonic Level Transmitters

1. The system electronics for the level transmitter shall measure and convert the time lapse between transmitted and received ultrasonic signals at the transducer into a 4-20 mADC signal directly proportional to tank level.

2. The electronics shall also compensate the liquid level signal for the time delay variation caused by temperature changes.

a. Level transmitter shall transmit 4 mADC at zero (differential) level and 20 mADC at maximum (differential) level. Maximum level shall be field adjustable.

3. The transmitters shall be capable of sending its output signal into a load of 750 ohms.

4. Operating temperature range of the electronics shall be -40 to 122 degrees F.

5. Memory shall be non-volatile EEPROM. Configuration parameters and alarm setpoints shall not be lost upon power loss.

6. Each Level transmitter shall have the following additional features:

   a. The system electronics shall be calibrated by an infrared handheld programming keypad. All other methods of non-intrusive interrogation are unacceptable. Provide one hand-held unit with each transmitter.

   b. A multi-digit LED indicator readout calibrated in feet, meters, inches, cm, mm, or percent, depending on the application. Digital indicator shall be capable of displaying to the hundredths position. LCD shall utilize four digits, 0.7 inches high, minimum.

   c. Provide temperature compensation for changes in the speed of sound.

   d. Labeled terminal strips for all external electrical connections.

   e. Five multipurpose relays with one Form "C" contact per relay, rated 5 amps at 250 VAC non-inductive.

   f. Loss of Echo - Transmitter shall provide two forms of "loss of echo" indication. Transmitter shall be configurable to drive the 4 to 20 mA signal either below 4 mA or above 20 mA. Output contacts on the transmitter shall be configurable to energize upon "loss of echo."

g. Power Loss - Transmitter shall be configurable to energize upon "power loss."

h. Provide two 4-20 mA signal outputs and one 4-20 mA signal input.

M. Level Measuring System Feature and Performance Requirements

1. Minimum distance measurement of 33 feet.

2. The systems shall have a minimum accuracy of +0.25 percent of range, or 0.24 inches, whichever is greater.

3. Beam angle shall not exceed 12 degrees.

4. Blanking distance shall not exceed 12 inches.

5. Resolution - 0.1 percent of span or 0.08 inch, whichever is greater.

6. Power Requirements - 120 VAC.

7. Mounting Hardware - Provide stainless steel mounting hardware as necessary to mount equipment in locations as described in the Contract Documents. Use manufacturer's supplied mounting brackets as required.

8. Cabling - Provide power, and signal, cable and conduit to locate transmitters and transducers in locations shown on the Contact Documents according to Section 17000.

N. Each 4-20mA signal from the level transmitters shall be connected to PLC analog inputs (quantity 4). Points shall be programmed to track the level transmitter output and display on the HMI and be available to the SCADA system supervisory software. All signal scaling shall be performed in the PLC. Resolution shall be to two decimal places.

1. LIT-8300 shall monitor the water level in each of the flushing chamber storage areas; LE-8300A for Flushing Chamber A, LE-8300B for Flushing Chamber B. The PLC shall programmed to provide an operator setpoint level for each flushing chamber storage area that corresponds to the level required to adequately flush the conveyance

system. Provide programming for operator adjustable high level alarm setpoints for each transducer. Initial value shall be set at a level corresponding to the level of the storage area containment wall plus 6 inches. Program fault alarms in the transmitter processed by the PLC to indicate a failure of a level transducer loss of echo.

2. LIT-8301 shall monitor the water level in the CSO 044 regulator structure; LE-8301A. The second analog output (LE-8301B) of the transmitter shall be fully wired to the PLC as a wired and programmed spare for future use. Provide programming for operator adjustable high level alarm setpoints for each transducer. Initial level value shall correspond to the overflow weir height. Program fault alarms in the transmitter processed by the PLC to indicate a failure of a level transducer loss of echo.

PART 3 EXECUTION

3.01 INSTALLATION

A. The conveyance flushing system and all necessary appurtenances shall be installed in accordance with the manufacturer's installation instructions, approved shop drawings, Contract Drawings and this Section.

B. The Contractor shall review the method of installation for the flushing gates and appurtenances with the respective manufacturers.

C. The Contractor shall field verify existing conditions and shall notify the Owner's Representative/Engineer of any conditions that need to be corrected prior to commencing the work of this Section. Commencement of work by the Contractor is acceptance of existing conditions.

D. An equipment manufacturer's representative shall supervise, check or assist in the installation of the flushing gates and appurtenances including level monitoring equipment as required by the Special Project Conditions and the General Specifications.

E. All required concrete inserts shall be Type 316 stainless steel and shall be supplied by the flushing gate manufacturer and be delivered to the site well in advance of the pouring of the concrete.

F. The flushing gates shall be shipped to the site preassembled and ready to install. The hydraulic power pack/control panel shall be preassembled, tested and contained in its own cabinet and pre-wired to its terminal blocks. All field connections to the level indicators, interconnections to remote control panel and power supply shall be the responsibility of Contract No. 6 - General.

3.02 FIELD TESTING

A. Field tests shall be conducted on the conveyance flushing system to ensure that the equipment is assembled and installed in accordance with the manufacturer's installation instructions, approved shop drawings, Contract Drawings and this Section. The primary goal of field testing is to ensure the proper installation, setup and operation of equipment or systems. Field testing includes all testing, measuring and adjusting of equipment or systems by the Contractor and/or manufacturer's representative prior to performance testing.

B. Field tests shall be conducted in accordance with the manufacturer's instructions and requirements.

C. Deficiencies identified during field tests shall be corrected.

D. All labor, equipment, water, special tools or apparatus and supplies required for field tests shall be supplied by the Contractor.

E. Field tests shall include, but are not limited to the following, where applicable:

1. Checking the voltage to a piece of equipment or system.

2. Checking the rotation of a motor.

3. Checking the clearance between mounting and mating surfaces.

4. Testing the operation of a manually operated or motorized piece of equipment to ensure smooth operation of mechanisms.

5. Checking the flow rate through a piece of equipment, system or structure.

6. Testing the operation of equipment controls.

7. Any testing of the operation of a piece of equipment or system prior to performance testing.

8. Testing the operation of the level measuring equipment.

F. Coordinate with the supplier of fiber optic communications equipment supplied under Section 17105 and SCADA system programmer to test performance of network data passed from the flushing chamber equipment to the Owner's SCADA system.

3.03 PERFORMANCE TESTING AND REPORTING

A. Performance tests shall be conducted on the conveyance flushing system. Performance testing consists of extended duration operation, under actual working or design conditions, of all facility equipment and systems, as outlined in the General Specifications. Installation and all other field testing and adjustments to equipment and systems shall be completed and checked by a manufacturer's representative prior to performance testing. A manufacturer's representative shall be present during performance testing as required by the Special Project Conditions and the General Specifications. A startup report outlining the results of performance testing shall be prepared by the manufacturer's representative and submitted directly to the Engineer in accordance with the General Specifications and the Special Project Conditions.

B. Performance tests shall be conducted in accordance with the manufacturer's instructions and requirements.

C. Deficiencies identified during performance tests shall be corrected and the performance test shall be resumed in accordance with the General Specifications.

D. All labor, equipment, special tools or apparatus and supplies required for performance tests shall be supplied by the Contractor.

3.04 SERVICES OF MANUFACTURER'S REPRESENTATIVE

A. The Contractor shall arrange for the equipment manufacturer to furnish the services of an authorized and qualified factory representative in accordance with the General Specifications. The manufacturer's representative shall be available to perform the services listed, for the durations noted, in the Special Project Conditions.

B. The manufacturer's representative shall prepare a written start-up report, as described in the General Specifications, at the conclusion of performance testing. The start-up report shall include an installation certification and shall be submitted directly to the Engineer.

3.05 FLUSHING GATE SCHEDULE

LOCATION	QUANTITY	CHANNEL DIAMETER
Conveyance Flushing Chamber A	1	12 feet
Conveyance Flushing Chamber B	1	8 feet

END OF SECTION

SECTION 15101

MISCELLANEOUS VALVES AND PIPING APPURTENANCES

PART 1 GENERAL

1.01 SECTION INCLUDES

A. Furnishing various types of valves and piping appurtenances.

B. Knife gate valves.

C. Valve operators.

D. Installation.

E. Testing.

1.02 RELATED SECTIONS

A. Special Project Conditions, General Provisions and General Specifications
B. Section 02530 - Sewage and Drainage Piping Installation
C. Section 02620 - Polyvinyl Chloride (PVC) Non-Pressure Pipe
D. Section 09900 - Painting

1.03 DESIGN REQUIREMENTS

A. The design working pressure shall be 150 psig for fluid valves 12 inches NPS in diameter and smaller.

1.04 SUBMITTALS

A. Submittals shall be submitted in accordance with the provisions set forth in the Special Project Conditions, General Provisions and General Specifications.

B. Submit shop drawings of types of valves, hydrants and appurtenances proposed for the project including conformance to ANSI/AWWA codes and related details for field assembly, operations and maintenance.

C. Manufacturer's Installation Instructions - Indicate special procedures required to install products specified.

D. Results of shop tests, if required.

E. Actuators - For those valves with actuators, submittals shall indicate dimensions and orientation of actuators.

1.05 DELIVERY, STORAGE, HANDLING

A. Delivery, storage, and handling of valves shall be in accordance with the Special Project Conditions, General Provisions and General Specifications.

PART 2 PRODUCTS

2.01 MATERIALS

A. Valves shall be of standard manufacturer and of highest quality, both as to material and workmanship, conforming to the latest edition of AWWA standards specified.

B. All valves shall have the manufacturer's name monogrammed or initialed by the manufacturer thereon and shall be identified by catalog numbers.

C. All valves shall be provided with flange or screwed ends as shown on the Contract Drawings.

D. Valves over 2 inches in nominal diameter shall be iron bodied, fully brass or bronze mounted unless otherwise indicated on the Contract Drawings.

E. All surface forming joints or bearing surfaces shall be machined to a perfect fit.

F. All disc and seat rings shall be carefully and thoroughly secured in place with the iron castings machined where the rings are bare and the backs of the rings machined all over.

G. After the rings have been fastened securely in place, the front shall be machined all over to a perfectly true and smooth bearing surface.

H. Valves shall open counterclockwise (left) unless otherwise specified.

2.02 RESILIENT SEATED KNIFE GATE VALVE

A. Valves shall be of the bonnetless knife gate type with wafer MSS-SP-81 flanged connections. Raised face flanges shall be drilled to ANSI 125/150 pound standards. C.W.P. valve rating shall be 150 psi. Valves shall meet TAPPI TIS 405-8 and ANSI B16.5 standards.

B. Valves shall be resilient seated. Valve bodies shall be furnished with all wetted parts of type 316 stainless steel.

C. Valve packing shall be multiple layers of square braided PTFE impregnated synthetic fiber. The gate shall have a rounded bottom with a beveled knife edge. All sides of the gate shall be finish ground. The stem shall be stainless steel. Valve superstructure shall be carbon steel. The yoke sleeve shall be bronze. The valve body shall incorporate guides and jams to assist the seating. Valves shall have a raised face seat with a relieved area around the seat to prevent jamming.

D. Resilient seated valves shall have a seat ring with a molded resilient insert to the body and gate sides for installations where drip-tight shutoff is required. Resilient seat material shall be EPDM.

E. An extended stem operator shall be furnished on each valve.

F. Valves shall be Red Valve Series G Knife Gate Valves or approved equal.

G. All non-stainless metallic parts of the valve, interior and exterior, shall be coated with a factory applied epoxy coating. Refer to Section 09900 for additional requirements.

2.03 OPERATING WRENCH

A. Wrench for wrench-operated valves located above ground shall be of bronze or cast iron, and shall fit 2" square nut and be 6'-0" long to facilitate an effortless operation. One such wrench shall be provided for each valve on the project requiring wrench operation.

2.04 EXTENDED STEM OPERATORS AND GUIDES

A. All valves located below grade shall be provided with extended stem operators.

B. Extended stem operators shall be cold rolled steel supported by bronze bushed stem guide brackets at intervals not to exceed 10 feet.

C. Extended stem operators shall be of sufficient length to allow operation of valve from approximately 24 inches below grade.

D. Anchor bolts for guide brackets shall be stainless steel.

2.05 VALVE BOXES

A. Boxes shall be cast iron screw-type with 5-1/4 inch inside diameter.
B. Box cover shall have the word "STORM" cast into it.

2.06 FLANGE ADAPTER

A. A PVC pipe flange adapter shall be provided for valve installation as shown on the Contract Drawings.

2.07 FINISHES

A. All surfaces of the valves shall be clean, dry and free from grease before painting. The valve interior and exterior surfaces except for seating shall have manufacturer's standard epoxy finish and comply with all pertinent AWWA Standards.

PART 3 EXECUTION

3.01 EXAMINATION

A. Verify that structures are complete and ready to receive work.

B. All valves and appurtenances shall be carefully inspected in the field before installation. Cracked, broken, warped, out-of-round, damaged joints, including damaged linings or coatings, or otherwise defective valves, hydrants and stops, as determined by the Owner's Representative, shall be culled out and not installed. Such rejected material shall be clearly tagged in such manner as not to deface or damage it, and the material shall then be removed from the job site by the Contractor at his own expense.

C. The Contractor shall have on the job site all the proper tools, gauges, pipe cutters, lubricants, etc., to properly install valves, appurtenances, etc.

D. The Contractor shall verify all valve positions and locations before installation.

3.02 TOLERANCES

A. Valves and appurtenances shall be installed at the elevations and locations shown on the Contract Drawings.

3.03 INSTALLATION

A. The Contractor shall furnish slings, straps, and/or approved devices to provide satisfactory support of the valves when lifted. Transportation from storage areas to the work area shall be restricted to operations which can cause no damage to the coating or lining or castings.

B. The valves shall not be dropped from trucks onto the ground.

C. All valves shall be installed in accordance with the specifications for the pipe to which they are to be connected and as previously described for individual types of valves.

D. Joints of valves shall be made up in accordance with the Drawings and/or as described under the appropriate pipe joint descriptions found in other sections of these specifications.

E. The valves shall be so located that they are accessible for operating purposes and shall bear no stresses due to loads from the adjacent pipe.

F. All valves shall be inspected before installation, and they shall be cleaned and well lubricated before being installed in the line.

3.04 SERVICES OF MANUFACTURER'S REPRESENTATIVE

A. Installation supervision shall be as required for proper installation via phone or fax.

END OF SECTION

SECTION 16055

ELECTRICAL WORK

PART 1 GENERAL

1.01 SECTION INCLUDES

A. General work description and requirements for electrical work included in this contract.

B. Raceways, fittings and boxes.

C. Conductors and accessories.

D. Grounding.

E. Disconnect and safety switches.

F. Nameplates and labels.

G. Spare devices.

1.02 RELATED SECTIONS

A. General Provisions
B. General Specifications
C. Section 02230 - Select Fill
D. Section 02300 - Earthwork
E. Section 02515 - Walks and Curbs
F. Section 02721 - Paving and Resurfacing
G. Section 02936 - Lawn Seeding
H. Section 03200 - Concrete Reinforcement
I. Section 03300 - Cast-in-Place Concrete
J. Section 03350 - Concrete Finishes
K. Section 16161 - Control Panels and Enclosures
L. Section 16484 - Contactors and Motor Starting Equipment
M. Section 16900 - Auxiliary Controls and Relays
N. Section 16950 - Testing and Inspection

1.03 GENERAL REQUIREMENTS

A. All work shall be subject to applicable sections of these specifications, not necessarily the aforementioned related sections.

B. Examination of Premises

1. Before submitting a proposal, the Contractor shall examine all drawings and specifications relating to work of all trades to determine scope and relation to other work.

2. Ascertain access to site, available storage, and delivery facilities.

3. Before commencing work, verify all governing dimensions and examine all adjacent work at site.

4. Some equipment or material items may be special order items having long order times and shall be ordered well in advance of installation. Unavailability due to long lead times or special orders is not an excuse for not providing the specified items.

1.04 SCOPE OF WORK

A. The principal items of electrical work include, but are not necessarily limited to, the following:

1. Provide all electrical power, control, instrumentation, and ductbank systems, including all raceway systems, conductors, cables, fittings, special control, wiring devices, distribution equipment, overcurrent protection, terminations, connections, and interconnections, and all related appurtenances to provide a complete and operating electrical system.

2. Provide all system and equipment grounding in conformance with the requirements of these specifications and the NEC.

3. Provide electrical labels, signs, and nameplates per this section.

4. Install all electrical equipment, conduit, wire, conductor cable, connections, etc., required for complete and operating systems.

5. Coordinate work with the work of others for timely completion of the work of this Contract.

6. Have New York Board of Fire Underwriters or other third-party Owner-approved inspecting agency inspect electrical installation. Submit a final certificate approving all work to the Engineer prior to final acceptance of the electrical work.

7. See the General Specifications for additional requirements for record drawings, operation and maintenance manual, final testing and inspection, and guarantees and warranties.

8. Provide all materials, equipment, and labor required for complete and operating electrical systems.

9. Perform all trenching, backfilling, restoration of surfaces, dewatering (as required), ductbank fabrication, grounding system, distribution, and instrumentation.

1.05 CODES AND STANDARDS

A. Reference to various codes and standards are a minimum installation requirements standard. In case(s) of discrepancy between the Contract Documents and the NEC, the stricter requirement shall apply.

B. All work, equipment, and materials furnished shall conform with the existing rules, requirements, and specifications of the Insurance Rating Organization having jurisdiction; the National Electrical Code (NEC); the National Electric Manufacturer's Association (NEMA); the Underwriters Laboratories (U.L.); and the respective utilities.

C. All material and equipment shall bear the inspection labels of Underwriters Laboratories, unless otherwise allowed by the Engineer in writing and if the material and equipment is of the class inspected by said laboratories. All labeling shall be for the intended usage.

D. The Contractor shall be held responsible for adherence to all rules, requirements, and specifications as set forth above. Any additional work or material necessary for adherence will not be allowed as an extra, but shall be included in the bid price. Ignorance of any rule, requirement, or specification shall not be allowed as an excuse for non-conformity. Acceptance by the Owner or Engineer does not relieve the Contractor from the expense involved for the correction of any errors which may exist in the drawings submitted or in the satisfactory operation of any equipment.

1.06 SUBMITTALS

A. Submit shop drawings under provisions of the General Specifications.

B. The Engineer's approval shall be obtained for all equipment and material for which shop drawings are required before delivery to the job site. Delivery, storage or installation of equipment or material which

has not had prior approval will not be permitted at the job site.

C. Provide submittals for all conduit, wire, cable, boxes other than device boxes, enclosures, fittings, hangers, supports, outlets, disconnect switches, overcurrent devices, control panels, sealoffs, and all other electrical equipment as listed in other Sections.

1.07 RECORD DRAWINGS

A. In addition to the requirements of the General Specifications regarding record drawings, prepare and submit two additional copies of the marked-up field record drawings, which shall include all addenda items and changes made during construction, to the Engineer prior to final acceptance. Additionally, submit record drawings consisting of the following three types of drawings:

1. Elementary or Schematic Diagrams - All control schematics and elementary diagrams. Those constructed as shown on Contract Drawings need only be verified on the marked-up field set. For those that changed, submit preliminary diagrams before work on the final block diagrams is begun.

2. Block Diagrams - Prepare and submit fully labeled block diagrams, showing all point-to-point connections giving conduit size and fill (each conductor number, size, and color listed) showing all junctions boxes, pullboxes, panels, etc., together with terminal numbers at all conductor terminations. Drawings shall be 24-inch by 36-inch reproducible mylar. Block diagrams are to be updated to reflect all final connections (connections labeled) or other changes. When there is more than one sheet of block diagrams, an index shall be included to indicate on which sheet the respective pieces of equipment can be found. See sample attached to end of this Section.

3. Contractor's As-built Drawings - Provide one 24-inch by 36-inch mylar copy of electrical as-built drawings of the Contract Drawings with all field notes and comments to illustrate actual construction conditions. As-built drawings shall include all addenda items issued during bidding and all other changes to the documents that occurred during construction. Drawing to be titled "Contractor's As-built Drawing, Prepared by: (name of Contactor ___, Date Issued: _____."

B. Provide the final approved record drawings on 24-inch by 36-inch mylar.

C. All drawings shall be produced using the computer aided drafting system, AutoCad 2002 as a minimum.

D. One mylar reproducible (24-inch by 36-inch) showing all concealed conduit including ductbanks that cannot be shown clearly on the marked-up field set. All underground conduit routings and ductbanks shall be dimensioned from aboveground structures. All manholes, handholes, pullboxes, and bends without structures shall have at least two ties.

PART 2 MATERIALS AND EXECUTION

2.01 RACEWAYS, FITTINGS AND BOXES

A. Raceways

1. Type A - Rigid Galvanized Steel Conduit (RGS)

a. Application - Unless otherwise indicated on the Contract Drawings or under this section, all wiring shall be run in Type A conduit.

b. Description - Hot dipped galvanized rigid steel conduit, shall conform to ASA C80-1.

c. Manufacturers

1) Allied.
2) Wheatland.
3) Republic.
4) Or equal.

2. Type D - Rigid Non-metallic Conduit Schedule 40 (PVC)

a. This conduit shall be used in ductbanks only, except signal conduits shall be Type A or E-1. This type conduit shall be not used for stub-ups from ductbanks. Stub-ups shall be Type D-1 unless through or into hazardous areas, where Type E-1 shall be used.

b. Description - Rigid, non-metallic conduit, shall be rigid polyvinyl chloride (PVC), Schedule 40 and shall conform to Federal Specifications W-C-1094 and Underwriters Laboratories, Inc. Standard UL-651.

c. Manufacturers

1) Allied.
2) Carlon
3) Or equal.

3. Type D-1 - Rigid Non-metallic Conduit Schedule 80 (PVC)

a. Application - For ductbank stub-ups, except through or in hazardous areas where Type E-1 shall be used, from 24 inches below grade up to the connected enclosure and ground conductor protection.

b. Description - Rigid, non-metallic conduit, shall be rigid polyvinyl chloride (PVC), Schedule 80 and shall conform to Federal Specifications W-C-1094 and Underwriters Laboratories, Inc. Standard UL-651.

c. Manufacturers

1) Allied
2) Carlon
3) Or equal

4. Type E-1 - Polyvinyl Chloride Coated Rigid Steel Conduit with an Interior Urethane Coating

a. Application - For use in hazardous areas and for all signal conduit stub-ups.

b. Description -Polyvinyl chloride coated, rigid steel conduit. Shall conform to Federal Specification WWC-581d and be coated with a heat polymerizing adhesive prior to plastic coating. PVC coating shall be applied by plastisol method. The interior coating shall be a factory-applied two part 2 mil thick chemically cured hot dipped urethane coating colored to distinguish the Type E-1 system from the standard Type E system. The conduit shall conform to NEMA Standard No. RNI-1986.

c. Manufacturers

1) Robroy
2) Ocal
3) Or equal.

5. Type G-2 - Non-Metallic, Liquid-tight Flexible Conduit
   a. Application - For use inside enclosures.

   b. Description - Liquid-tight, flexible, non-metallic conduit. Conform to UL 1660 consisting of hard PVC spirals with extra flexible thin-wall PVC coating.

   c. Manufacturers

      1) Carlon Carflex.
      2) Thomas & Betts Xtraflex
      3) Or equal

6. Type H - Explosionproof, Flexible Conduit

   a. Application - For use in hazardous areas as final connection to motors and other vibrating equipment.

   b. Description - Explosionproof, flexible conduit shall be flexible core with bronze braid covering and steel end fittings.

   c. Manufacturers

      1) Crouse-Hinds
      2) Appleton
      3) Killark
      4) Or equal

B. Conduit Fittings

   1. All Fittings - Cast type, material shall match conduit system it is to be used with.

   2. Covers shall be of the same material as the fittings to which they are attached.

C. Expansion Fittings

   1. Material shall match conduit system it is to be used with, designed for 4-inch movement.

   2. Coupling shall compensate for axial expansion or contraction.

D. Access Fitting and Pulling Fitting - Of the same construction as conduit fittings. Provide cover gasket in wet locations.

E. Boxes

1. Junction and Pullboxes - Of the same construction as conduit fittings. Up to 100 cubic inches. Larger boxes shall be galvanized with hinged covers. Provide cover gasket in wet locations. Provide terminal strips for joining conductors in boxes over 100 cubic inches.

2. Concrete Pullboxes, Manholes, and Concrete Junction Boxes

   a. Precast concrete boxes shall be in accordance with the Contract Drawings.

   b. Pulling irons located adjacent to and below duct windows.

   c. Pulling Irons - 3/4-inch diameter, cold-rolled steel, unless otherwise noted.

   d. Manhole covers for manholes and boxes. Cast iron frames and covers.

   e. Pullbox and Junction Box Covers - Concrete for H-20 loading.

   f. Manufacturers

      1) Fort Miller
      2) Kistner
      3) Lakelands
      4) Or equal

F. Elbows - Factory made by same manufacturer as couplings or conduit. Material to match conduit system it is to be used with.

G. Miscellaneous

1. Nipples, Locknuts, and Bushings - Factory made; material to match conduit system it is to be used with.

H. Conduit and Core Hole Sealing - Mechanical link type with elastomeric links joined by stainless steel bolts which also serve to expand the seal. Manufacturer - Thunderline Corporation, Model "Linkseal."

2.02 CONDUCTORS AND ACCESSORIES

A. Conductors: Application - Material - Manufacturers

1. Building Wire and Cable

a. Application - For general use for all conductor applications unless specifically called out otherwise. Not for use as service entrance cable, power distribution cable, and submersible cable.

b. Description - Single conductor insulated wire type as indicated below.

1) Conductor - Stranded copper.

2) Insulation Voltage Rating - 600 volts.

3) Insulation Type - Type THHW/THWN for all power and control wiring.

4) Insulation Material - PVC or thermoplastic with nylon overall jacket.

c. Manufacturers

1) Anixter
2) Okonite
3) Or equal

2. Instrumentation and Signal Cable

a. Application - For use where called for on Contract Drawings when not provided by equipment suppliers.

b. Description - Single or multi, twisted pair and twisted triad cable with overall shield.

1) Conductor - Stranded copper, Size 16 or 14 AWG, as required.

2) Insulation Voltage Rating - 600 volts.

3) Insulation Material - Color coded PVC for individual conductors and nylon or overall jacket.

4) Shielding - Single pair or triad tinned copper braid. Multi-pair or triad 4 mil soft copper overall cover tape.

5) Drain - Tinned copper wire.

c. Manufacturers

1) Alpha
2) Okonite
3) Or equal

3. Bonding and Grounding Conductors

a. Application - For use as needed to meet the requirements of this specification as shown on the Drawings and the NEC for bonding and grounding.

b. Description - Multi-conductor cable, Insulated conductor are twisted into pairs.

1) Conductor - Bare copper wire.

2) Stranding - Solid ASTM B-1 for Sizes No. 8 and smaller. Stranded ASTM B-8 for Sizes No. 6 and larger.

3) Grounding system conductor from inside equipment to grounding rods or plates shall be tin-plated. Note: This may be a special order item. Order well in advance of installation.

c. Manufacturers

1) Anixter
2) Cablec
3) Or equal

4. Control Panel Wire

a. Application - For use in all manufactured control panels.

b. Description - 90 degrees C Machine Tool Wire (MTW).

1) Conductor - Minimum Size AWG #16, 19 strand.

2) Insulation - PVC, 2/64-inch for 600 V service.

c. Manufacturers

1) Carol
2) Anixter
3) Or equal

5. Fiber Optic Cable (See Specification 17105)

B. Wire Terminations and Connectors

1. General

a. Connector material shall be compatible with the wire that it is to be used with.

b. Connectors made of aluminum shall not be used with copper conductors.

c. Connectors listed below are for use with copper wire. Connectors to be used with aluminum wire shall be of the same general type and construction as those listed below, but shall be suitable for use with aluminum conductors.

2. Terminal Block Manufacture

a. Control Wiring

1) Buchanan - Model 0241
2) Connectron - Model NSS3
3) Or equal

b. Equipment Power Wiring

1) Buchanan - Model 416
2) Connectron - Model NC3
3) Or equal

3. Two-Way Splices

a. Description - Tubular compression type for conductors 1/0 and larger. Rated 600 VAC and uninsulated.

b. Manufacturer

1) Burndy - Model YS-L "Hylink"
2) Thomas & Betts - Model 545
3) 3M Model 10000
4) Or equal

4. Crimp Connectors

   a. Description - For branch circuit connections, other than lighting and receptacle circuits.

   b. Manufacturer

      1) Ideal - Series 30; Model 410
      2) Thomas & Betts - Model PT66M
      3) Or equal

5. Terminal Strip Connectors

   a. Description - For control and instrumentation connections to terminal strips. Locking fork, vinyl self insulated, crimp type connectors or tubular clamp type.

   b. Manufacturers

      1) Burndy - "VINYLUG" Types TP-LF and BA-EL.

      2) Thomas & Betts - Catalog Series 18RA, 14RB, and 10RC.

      3) Ideal - Series 83-7.

      4) Or equal.

6. Wire Nuts

   a. For Unclassified Areas - Hexagonal-shaped for use with a nut driver, compact swept-wings, ribbed cap, UL-listed for 600V with temperature rating of 105 degrees C (221 degrees F).

      1) Ideal - Models 341 and 342.
      2) 3M - Models 212, 312, and 512.
      3) Buchanan - Models B-1, B-2, and B-4.
      4) Or equal.

   b. For Wet, Corrosive, and Hazardous Areas - Compact swept-wings, ribbed cap, filled with non-hardening sealant, UL listed for 600V with temperature rating of 105 degrees C (221 degrees F).

      1) Ideal - Model DB Plus
      2) Buchanan - Model BTS2 and BTS4.
      3) Or equal.

7. Bolted Wire Connectors - Mechanical connectors for all combination of conductors. Connectors shall be of a compact high-strength design, tin-plated copper alloy, two-piece connector, and shall utilize two hex head bolts.

   a. Burndy - Model KVSU.
   b. Or equal.

2.03 GROUNDING

A. Install ground system as shown on the Contract Drawings by installing driven ground rods into the ground a minimum of 12 inches below grade. Where rods cannot be driven due to rock formations, install grounding plates below groundwater level of a minimum of 6 feet below grade. Depth of the system conductors is to be 30 inches minimum. Use approved mechanical connections to rods. Ground rods shall be steel core copper jacketed rods; 3/4-inch diameter by 10 feet long.

2.04 NAMEPLATES AND LABELS

A. Nameplates

1. Material - Rigid laminated plastic.

2. Lettering Height - 5/16-inch high.

3. Lettering Color - White.

4. Background Color - Black.

B. Labels

1. Self-debossing, aluminum foil type.

2. Typewritten or preprinted black legends on white background.

3. Permanent Pressure-Sensitive Adhesive - Provide high temperature adhesive for labels on heat producing devices.

4. Use preprinted sleeve type for conductors. Label at each termination or splice.

5. Manufacturers - Seton or equal.

C. Equipment and Control Identification

1. In addition to the requirements of the National Electrical Code, install an identification label which will clearly indicate information required for use and maintenance of items such as cabinets, motor controllers (starters), safety switches, separately enclosed circuit breakers, control devices and other significant equipment.

2. Provide nameplates for all electrical equipment and controls.

3. Attach nameplates with stainless steel or other non-corrosive metallic rivets or screws.

4. Provide a nameplate at each remote switch or control device when the controlled function is not readily identifiable.

5. All wiring except primary service conductors shall have each end of the conductor labeled. Label wires at each junction box.

2.05 SPARE DEVICES

A. Provide the following spare devices:

1. Six each of all fuses.

2. Two spare pilot or indicator light bulbs of each type; store in a NEMA 1 enclosure 12 inches by 12 inches by 4 inches minimum mounted inside each overall equipment enclosure.

PART 3 EXECUTION

3.01 CONDUIT INSTALLATION

A. Conduit System Fabrication

1. Conduit Defects - All conduit runs, cuts in coatings, to be free of indentations, elliptical sections, blisters, and other defects. Repair or replace damaged conduit sections as instructed by the Engineer.

2. Conduit Cutting - Cut all conduit ends square and remove all burrs. Cut conduit ends exactly to avoid excessive penetration into boxes.

3. Expansion Joints - Provide approved conduit expansion joints wherever conduit crosses a structural expansion joint, is attached between two separate structures, the conduit run is 50 feet or more in a single length, or wherever shown or specified. Support conduit on each side of the expansion joint.

4. Preparation for Conductor Installation - Prior to pulling cables in any conduit system, thoroughly clean the inside of each length of conduit by swabbing or the use of compressed air to remove all foreign matter. Then temporarily plug the ends of each conduit to prevent the entrance of dirt or foreign matter.

5. Couplings

   a. Tightly butt ends of conduit into the couplings.

   b. In exposed work only, where standard couplings cannot be used, only union-type couplings are permitted or as otherwise acceptable to the Owner.

6. Connection to Devices - Conduit attachment to all electrical equipment, such as sheet steel junction boxes, pullboxes, switches, etc., to be made with approved fittings with non-metallic bushings.

7. Conduit Bends and Elbows

   a. Rigid Metallic Conduit Systems (Types A and E-1)

      1) Heating metal conduit to facilitate bending is <u>strictly prohibited</u>.

      2) Field bending metal conduit is permitted as follows:

         a) Types A and E-1 - Up to and including 3/4-inch size.

      3) For all rigid metal conduit larger than that above, use manufactured elbows or use hydraulic one-shot bender to fabricate bends.

      4) Make all bends with radius no less than N.E.C. requirement.

b. Rigid Non-Metallic Systems (Types D and D-1)

1) Join non-metallic conduit using cement as recommended by manufacturer. Wipe non-metallic conduit with appropriate cleaner, then dry before joining. Apply full even coat of cement to entire area inserted in fitting. Allow joint to cure for 20 minutes, minimum.

2) Field bending of Types D and D-1 conduit is permitted only if a "hot box" is used.

3) Make all bends with radius no less than NEC requirement.

4) Kinked or crimped conduit bends are not acceptable. Remove and replace all such bends.

8. Routing of Conduits - Keep the number of bends, offsets, and crossovers to a minimum; however, not more than three 90-degree elbows or equivalent bends up to 270 degrees is to be installed in any run between pulling or access fittings.

9. Structural - Make holes around conduit or cables watertight or gas-tight via silicone masonry sealant or other applicable sealant upon completion of conduit or cable system.

10. Do not cross conduits one over the other in concrete slabs in any circumstances.

B. Conduit Size - Minimum conduit sizes shall be as follows unless specifically shown otherwise:

1. 3/4-inch for exposed locations.

2. 1-inch for any concealed conduit.

3. 2-inch for any conduit in ductbanks.

C. Changes in Conduit Sizes - Made at pull or junction boxes except where specifically shown via a pull fitting.

D. Conduit and Sleeve Sealing

1. Seal inside of conduit (after installing and testing conductors) where passing through exterior walls or walls containing vapor seals or required to be gastight. Sealing may be accomplished by

locating junction or approved sealing fitting at wall and filling with an approved waterproof electrical putty or sealing compound. Seal around all interior conduit passing through enclosure walls or other structures.

2. Where driptight and watertight NEMA 4X and 12 installations are required, use only watertight hubs for top or side entry. Locknuts with gaskets are not acceptable. Conduits entering the top of electrical equipment are to either be sealed or located in such a manner as to prevent water from entering the equipment through the conduit system. Install conduit for ease of sealing.
3. Provide boxouts where conduit passes through poured-in-place concrete slabs.

E. Access Fittings

1. May be used as required to facilitate installation of conductors or where shown.

2. Provide access fittings or conductors, as manufacturer recommends so as not to damage conductor or insulation during conductor pulling operations.

3.02 CONDUCTOR INSTALLATION

A. Installation

1. Install products in accordance with manufacturers' instructions.

2. Do not pull thermoplastic wire at temperatures below 35 degrees F.

3. Protect exposed cable from damage.

4. Neatly train and lace wiring inside boxes, equipment, and panelboards.

5. Install electrical circuit loadings as designed on Contract Drawings unless approved otherwise by Engineer.

6. Where instrumentation cables are installed in panels, etc., the Contractor shall arrange wiring to provide maximum clearance between instrumentation cables and other conductors. Instrumentation cables shall not be installed in the same bundle with conductors of other circuits.

7. Intrinsically safe conductors shall be in separate conduits both inside and outside enclosure and shall be terminated on terminal strips with barriers. Barriers are to physically isolate intrinsically safe conductors from non-intrinsically safe conductors.

8. Installation in Concrete Manholes and Handholes - Neatly bundle conductors and train them around the outside of the enclosure. Support conductors from hooks inside of enclosure.

9. Wiring Diagrams

   a. Any wiring diagrams shown on plans for hookup of equipment furnished by others are approximate and are for bidding purposes only.

   b. Obtain wiring diagrams, certified correct for the job, from respective supplier for all equipment and systems furnished by them.

   c. Install all work in accordance with certified wiring diagrams.

10. Provide all power, control, and signal wiring and conduits between system components, including final connections to labeled terminal strips integral in equipment, as shown on Drawings, and in accordance with approved manufacturer's wiring diagrams.

B. Color Coding

1. Provide color coding for all feeder, branch, control, and signaling circuit conductors.

2. Grounded Conductor Color Coding in New Installations

   a. Ground - Green
   b. Neutrals - White*

   * Exception - Where neutrals of more than one system are installed in the same raceway or box, each neutral shall be white with a different colored (not green) stripe.

3. In addition to existing facilities, ungrounded conductors in different voltage systems shall match the existing system and/or be as follows:

   a. 120/240-volt, single phase: Red and black

b. DC Power - Positive Lead - Red.
- Negative Lead - Black.

c. DC Control - All blue.

d. 120-volt Control Wiring - Single conductor AC control wire shall be red, except a wire entering a control panel which is an interlock shall be color coded yellow.

e. 24-volt Control Wiring - Orange.

f. Neutral (Grounded Conductor) - White for 120 VAC and gray for 277 VAC systems.

g. Grounding Conductor - Green.

C. Conductor Sizing

1. Conductor sizes that are shown for equipment branch circuits are the minimum sizes allowed. Refer to Schedule in paragraph 3.02.C.2.c. below for sizing conductors on circuits longer than the minimum length shown for the various voltages. Adjust conduit sizes accordingly.

2. Wiring shown without size to be sized by one of the following methods, whichever is larger. No additional payment will be made for oversized conduit or conductor.

a. Power and Lighting Circuits - Minimum size No. 12 AWG. Quantity as required for proper operation. Use 3/4-inch conduit types as required for the area where conduit is installed.

b. Control Circuits - Minimum size No. 14 AWG. Quantity as required for proper operation, use 3/4-inch conduit, type as required for the area where conduit is installed.

c. Increase minimum size conductors for 20 ampere single phase circuits where distance between power source and item served exceeds noted length in accordance with the following table. No more than 2 percent voltage drop of all branch circuits at equipment's rated full load current is permitted.

120 volts	100' to 150'	#10	151' to 225'	#8	226' and up	#6
208/240 volts	100' to 175'	#10	176' to 250'	#8	251' and up	#6

d. Minimum size of branch circuits over 20 amps per requirements of NEC Tables 310.16 thru 310.31.

3. Neutral Wire - To be equal to ungrounded wires unless otherwise shown.

4. Ground Wire - Minimum size as required by the NEC Table 250-122.

D. Spare Conductors - Wherever groups of control and instrumentation conductors are required, provide the following minimum numbers of spare conductors. This is in addition to conductors shown on the Drawings. Contractor shall increase conduit size as required for the additional conductors. Terminate at terminal strips on both ends and mark as spare and indicate the location of opposite end.

CONDUCTORS	SPARES
Up to 10	4
11 to 18	6
19 and over	8

3.03 CONDUCTOR STRANDING

A. All conductors shall be stranded. Use appropriate solderless terminations.

3.04 CONNECTORS AND TERMINATIONS

A. Use manufacturer's standard lugs for connection of conductors to equipment panel or devices.

B. Use UL approved wire nuts for lighting and receptacle circuits and for other circuits, compression connectors for connection of conductors to other conductors.

C. Terminal Board Terminations - All interconnecting instrumentation wiring to terminal boards and strips to be made with insulated crimp type connectors (locking fork type). Stranded wire is not to be directly connected to terminals without the use of connectors unless the terminations are specifically made to accept bare stranded wire, i.e., tubular clamp type termination. No loose strands shall be permitted outside of the connector, whichever is utilized.

D. Motor Connections

1. Motors Less Than 1 HP - Use wire nut appropriate for the environment where the motor is located.

2. Motors From 1 to 20 HP - Use branch circuit crimp-type connectors.

E. Splicing - Make splices in accessible locations and in junction boxes. No splices will be permitted in pulling fittings.

3.05 GROUNDING

A. Maintain electrical integrity of conduit system throughout. Provide bonding jumpers at fittings as required; jumpers to be no longer than required. Provide separate ground wire for all non-metallic conduit systems and where grounding integrity is doubtful.

B. Basic intent of grounding specification is that grounding conductor be completely separate from system neutral and that neutral only be connected to ground at the main service grounding point. Run equipment ground independently back to main service ground. Use separate insulated (green) grounding conductors for all grounding conductors. Where ground passes through panels and disconnects, braze ground lugs to panel or disconnect housings. Isolate neutral bus or lug from ground. Ground all conduits at each panel.

C. Shielding to be continuous and grounded at one point only unless otherwise required by equipment manufacturer's recommendations.

(continued)

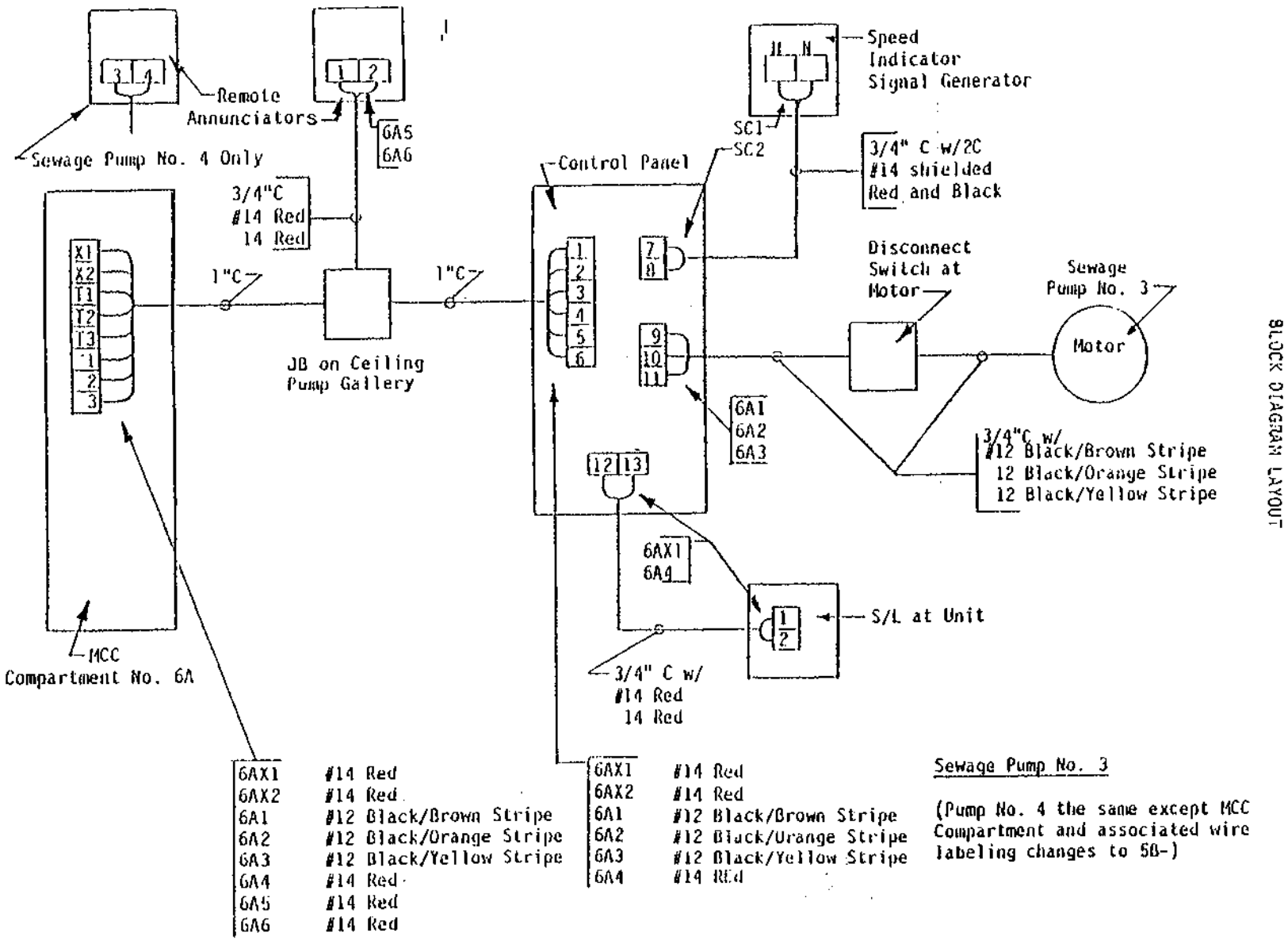

END OF SECTION

SECTION 16161

CONTROL PANELS AND ENCLOSURES

PART 1 GENERAL

1.01 SECTION INCLUDES

A. Hinged cover enclosures.

B. Cabinets.

C. Terminal blocks.

D. Control stations.

E. Accessories.

1.02 RELATED SECTIONS

A. General Provisions
B. General Specifications
C. Section 11296 - Conveyance Flushing System
D. All other Division 16 specifications
E. Division 17 specifications

1.03 REFERENCES

NEMA 250	Enclosures for Electrical Equipment (1000 Volts Maximum)
NEMA ICS 4	Terminal Blocks for Industrial Control Equipment and Systems
ANSI/NFPA 70	National Electrical Code
UL	Underwriters Laboratories, Inc.

1.04 SUBMITTALS

A. Submit under General Provisions and General Specifications and Section 16055.

B. Submit shop drawings for all control panels. The submitted information shall be detailed specification information proving compliance to these Specifications. Submittals shall include, but not be limited to, the following:

1. Enclosure information including size and NEMA classification.

2. Subpanel layout.

3. Wiring diagrams and elementaries.

4. Bill of materials.

5. Internal components (specification information, cut sheets).

6. List of nameplate titles.

7. Dimensions.

C. Shop drawings shall be submitted for all materials used as enclosures.

D. Submit equipment and material samples as requested by the Engineer.

E. Manufacturer's Instructions - Indicate application conditions and limitations of use stipulated by product testing agency specified under Article 1.06. Include instructions for storage, handling, protection, examination, preparation, installation, and starting of product.

1.05 DEFINITIONS

A. Power Wiring - Shall mean conductors, conduit, wireway and connections, and related electrical work to supply electrical power to equipment, including electrical power to supply point for equipment control systems.

B. Control Wiring - Shall mean conductors, conduit, wireway, construction and related work to connect or interconnect relays, solenoids, contact devices, signal lights and audible signals, as well as any and all other electrical control devices indicated as related to the control functions.

C. Control Panel (CP) - Is an enclosure used to house logic or power devices such as CPT, starters, contactors, relays, timers, and may also contain pilot devices.

D. Control Station (CS) - Is an enclosure used to house pilot devices only, such as pushbuttons, indicating lights, and selector switches.

1.06 REGULATORY REQUIREMENTS

A. Conform to requirements of ANSI/NFPA 70.

B. Furnish products listed and classified by Underwriters Laboratories, Inc. as suitable for purpose specified and shown.

1.07 EXTRA MATERIALS

A. Furnish under General Provisions and General Specifications and Section 16055.

B. Provide two of each cabinet key.

1.08 WORK INCLUDED

A. The following control panels shall be provided:

1. Flushing Chamber A equipment enclosure.
2. Flushing Chamber B.
3. CSO 044 level equipment.

PART 2 PRODUCTS

2.01 MANUFACTURERS

A. NEMA 3R stainless steel (special fabrication).

1. Hoffman.
2. Schaefer's Electrical Enclosures.
3. Or equal.

B. NEMA 1 painted steel.

1. Hoffman.
2. Schaefer's Electrical Enclosures.
3. Or equal.

2.02 SHEET METAL ENCLOSURE FABRICATION

A. After fabrication and assembly of all sheet metal enclosures, grind all welds smooth, and then thoroughly degrease and clean.

For painted steel enclosures, apply at least two coats of rust inhibiting primer or undercoat of the manufacturer's standard quality followed by at least two coats of baked enamel or epoxy finish. For exterior enclosures utilizing an epoxy finish, the enclosure shall have a final overcoat of clear acrylic polyurethane.

Finish Color of All Enclosures - ANSI 61 Light Gray.

B. Turn back edges and file all sharp corners smooth.

C. Enclosure Opening

1. Roll lips on all sides.

2. Provide neoprene gasket.

3. Provide drip shield kits for exterior enclosures.

D. Doors - Dead Front

1. Rolled lips on unhinged sides (three sides).

2. Full length piano type hinges.

3. Provide all front or rear panel doors with door holders sized appropriately for the weight of the equipment on the door.

4. Hinged doors over 24 inches high shall have latching device at three points.

E. Other

1. Provide heat and ventilation for interior ambient control (40 to 95 degrees F). Replaceable/cleanable filters with vandalproof louvers and screens.

2. Enclosure to be fully insulated with 1 inch of rigid foam insulation (Styroform by Dow or equal).

3. Enclosure thickness shall be 10 gauge.

4. Provide sun shield over top of enclosure.

2.03 ACCESSORIES

A. Manufacturer - Cable Ties

1. Thomas & Betts - Model Nylon TY-WRAPS.

2. Or equal.

B. Manufacturer - Terminal Blocks

1. Buchanan - Model 0241.

2. Connectron - Model N553.

3. Or equal.

C. Manufacturer - Wire Duct

1. Stahlin Brothers - Model XT-Panel Channel.

2. Panduit Corporation - Model Type E-Dark Grey.

3. Or equal.

D. Manufacturer - Grounding Terminals

1. Burndy - Model OA4C-AB.

2. Or equal.

E. Provide one drawing pocket in the panel, minimum size 10 inches wide by 10 inches high by 1/2 inch deep, panel manufacturer's standard material and finish.

PART 3 EXECUTION

3.01 ELECTRICAL CONTROL

A. Shall be in accordance with Section 16900.

3.02 POWER CIRCUIT PROTECTIVE DEVICES

A. Shall be in accordance with Section 16055.

3.03 NAMEPLATES

A. Provide nameplates on the exterior of each enclosure identifying the application or function of the enclosed equipment.

B. Nameplates and labels per Section 16055.

3.04 EQUIPMENT HOUSING TYPES

A. Enclosure, Control Panel or Device Applications

1. Exterior Locations - NEMA 3R stainless steel.

2. Interior Locations (inside the overall equipment enclosures) - NEMA 1 painted steel.

3.05 CONTROL PANEL CONNECTIONS

A. Regardless of who furnishes or installs the various panels, all are connected electrically by the electrical trade unless specifically shown or specified otherwise.

3.06 ENCLOSURE REPAIR

A. Repair any and all damages to the enclosure. Depending on the extent of damage, a new enclosure may be ordered by the Owner at his discretion.

3.07 DOOR QUANTITY

A. Provide two outer and inner doors if panel is larger than 36 inches wide.

3.08 CONTROLS AND ASSOCIATED CIRCUITRY

A. Each control panel shall contain all applicable disconnects, including a single main power disconnect (unless specifically shown otherwise on the drawings); motor circuit disconnect - one for each motor; necessary control pushbuttons; timers; relays; door interlock switches; indicator lights; selector switches; alarms; instruments and associated circuitry to monitor and control the associated equipment.

3.09 CONTROL PANEL WIRING

A. Wire Type - See Section 16055.

B. Wire Duct - Used for wiring between devices that are mounted on the back panel of control panels.

C. Wire Bundling - Where it is not possible to run wire in wire duct, such as wire run from devices located in the back of a panel to devices mounted on the door of a panel, the wire is to be bundled. Wire lacing or twine is not acceptable.

Bundles are to be wrapped by a spiral plastic protective sheath. Secure bundles to the panel structure for a stable support with a spacing of no less than every 8 inches.

A wire bundle which must cross a hinge shall run along the hinge as far as possible or have a large loop in bundle and be secured at both ends so that the twisting is taken over the longest length of hinge possible. Wire shall not be split off from the bundle along this length.

D. Wiring and Termination Methods - Interior wiring to be point-to-point with no splices. All wiring from and to the control panel to be through terminals located in the panel. Solderless insulated crimp-type locking fork lugs shall be used for terminations to screw-type terminals. Where screw-type terminals are not used, terminals shall be of the tubular clamp type. Install lugs such that no uninsulated wire is visible at the wire entry point, and wire strands are visible but not protruding from the screw connections end. Use solderless connectors or tubular clamp connectors for <u>all</u> connections to terminals and equipment.

E. Shielded Wire - Separate from other wires and equipment with suitable barriers and with terminal blocks for continuous shield grounding to the connecting cables.

F. Separate intrinsically safe wiring from all other wiring with barriers.

G. Furnish panels factory-wired and tested with all equipment and appurtenances mounted thereon.

H. Wire Labeling - Mark wires at both ends with numbers from Engineer-approved elementaries per Section 16055. Color coding per Section 16055.

I. Panel Wiring - All panel wiring shall be installed by the panel manufacturer.

J. Lamp Test Switch - For panels with more than five indicating lights. Provide a single lamp test switch in lieu of push-to-test type indicating light.

3.10 TERMINAL BLOCKS

A. Arrange terminals in alphabetic and numeric order in columns on removable subplates. Locate columns at least 4 inches from any edge of the subplate and space 6-inch on centers and at least 2 inches from a wiring duct.

B. Provide marked terminals with wire number from Engineer-approved elementaries. Locate terminals with the same wire number adjacent to each other and jumpered.

C. Make a maximum of two connections to each side of a terminal, including jumpers.

D. Provide an additional 20 percent spare terminals with the following as minimum requirements:

Power terminals	Two spares
Control terminals	Ten spares

E. At least one position on a terminal block must be reserved for termination of each incoming wire. Locate all such positions on the same side of the column of terminals. A wiring duct to feed the terminals must be sized to include wires for these positions.

F. Connect all ground terminals of power receptacles solidly to the frame of the panel. Provide the panel with one grounding terminal in the control panel. Mount grounding terminals to the frame of the panel or rack.

3.11 WIRING DUCT

A. Size wiring duct at 60 percent fill according to the maximum number of wires at any cross section, including field wiring terminations and spares. Wiring duct must be plastic.

3.12 CONTROL PANEL INSTALLATION

A. Furnish control panels, where shown, with power disconnect switches which will de-energize the power supply to the panel.

B. Ground Panels - Connect all equipment and circuits in the panels shown or required to be grounded to the grounding conductors.

C. Install panels where shown. Provide conduit entry as shown or specified or as required for the installation.

D. Upon completion of installation, the equipment manufacturer's representative shall check panels and make necessary adjustments.

E. Panel manufacturer to mount all equipment shown or specified to be furnished with a panel. Furnish panels as completely assembled units.

3.13 MOUNTING HEIGHT

Mount control panels such that:

A. No pilot device is higher than 5 feet 6 inches or lower than 3 feet 6 inches.

B. No operator interface device (i.e., graphic display screen, etc.) is higher than 5 feet 0 inches to the centerline of the device or lower than 4 feet 6 inches.

C. Do not provide legs.

3.14 ENCLOSURE INSTALLATION METHODS

A. Support - adequately support all enclosures either inside outer enclosure from mounting plates or the outer enclosure to slabs or pads via stainless steel 3/4-inch grouted anchors. Provide additional supports for seismic restraint, as required.

B. Support Material - Size fasteners utilizing a safety factor of 5.

C. Mounting Accessories - Section 16055.

D. All panels and enclosures shall be installed level and plumb.

END OF SECTION

SECTION 16484

CONTACTORS AND MOTOR STARTING EQUIPMENT

PART 1 GENERAL

1.01 DESCRIPTION

A. This section covers contactors and motor starting equipment for 600 volts and less.

1.02 SECTION INCLUDES

A. Motor starters.

1.03 RELATED SECTIONS

A. General Provisions
B. General Specifications
C. Section 11296 - Conveyance Flushing System
D. All other Division 16 specifications

1.04 REFERENCES

A. UL listing is required for all factory-fabricated assemblies. Individual component listing is also required.

B. Size equipment per NEMA and UL standards to match motor or equipment controlled.

C. The following specifications and standards, except as hereinafter modified, are incorporated herein by reference and form a part of this specification to the extent indicated by the references thereto. The issue in effect at time of construction shall be applicable. In text, such specifications and standards are referred to by basic designation only.

1. National Electric Code (NEC).

2. Underwriters Laboratories, Inc. (UL) - UL-508.

3. National Electrical Manufacturers Association (NEMA)

   a. NEMA-1C-1
   b. NEMA AB-1 - Molded Case Circuit Breakers

4. American National Standards Institute (ANSI).

5. J.I.C. Standards for Industrial Control.

1.05 SUBMITTALS

A. Submittals shall be made in accordance with the General Provisions, General Specifications, and Section 16055.

B. Shop drawings shall be submitted for all starters and contactors. The submittal shall contain all the information needed to prove conformance with these specifications.

C. Submit elementaries and block diagrams for systems of relays and/or contactors.

D. Samples shall be submitted as may be requested by the Engineer.

1.06 QUALITY ASSURANCE

A. Perform Work in accordance with NECA Standard of Installation.

1.07 QUALIFICATIONS

A. Manufacturer - Company specializing in manufacturing the products specified in this section with minimum three years' experience.

1.08 REGULATORY REQUIREMENTS

A. Conform to requirements of NFPA 70.

B. Furnish products listed and classified by Underwriters Laboratories, Inc. as suitable for purpose specified and indicated.

PART 2 PRODUCTS

2.01 GENERAL

A. All equipment furnished shall be of one approved manufacturer where possible. Manufacturers are General Electric Company, Square D Company, Allen-Bradley, Cutler-Hammer, or equal.

B. For control panels with motors less than 1/2 HP, starters may be IEC rated motor protective switches. All other starters shall be NEMA rated and sized starters.

C. Construction

1. Parts shall be easily removable when subject to wear, arcing damage, or electrical failure.

2. Enclosures - Cold rolled, formed seam-welded steel or cast aluminum with suitable legend plates and NEMA enclosures as per Section 16161.

3. Overload Protection

a. Magnetic Starters

1) Melting Alloy or Bi-metal - For all motors including those with internal protection, of proper size to match the controller. One sensing device per ungrounded motor lead. Size heaters per manufacturer's table supplied with the starter for the actual motor full load current and enclosure indicated on the motor nameplates. Temperature compensating motor starter overloads where or when required.

2) Solid State - Overload relay, self powered, current sensing, phase unbalance and phase loss protection, NC standard trip contacts, visible trip indication, trip test function, power LED. Provide auxiliary NO contact (convertible to NC). Adjust solid state overload settings to match motor manufacturers nameplate motor data.

Manufacturers - Square D, Allen-Bradley, or equal.

2.02 MAGNETIC STARTERS

A. General

1. Size per NEMA and UL standard to match motor controlled. Exceptions: NEMA Size 1 minimum or as shown otherwise.

2. Starter coil voltage shall be 120 VAC unless noted otherwise.

3. Provide auxiliary contacts as required.

4. Provide with melting alloy thermal overloads.

B. Full Voltage Non-Reversing Starting (FVNR)

1. Across-the-line type, rated 600 volts maximum.

2. Equipped with double break silver alloy contacts. (Single break shall be supplied on Size 8.)

3. Straight-through wiring.

4. Coils - Of molded construction through NEMA Size 7. Coils on Size 8 starters shall be form wound, taped, varnished and baked. Replaceable from the front without removing the starter from the panel.

5. Suitable for the addition of at least four auxiliary contacts.

6. Cutler-Hammer Type AN16, Square D Class 8536, General Electric, or equal.

2.03 COMBINATION MAGNETIC STARTERS

A. Factory assembled of UL-listed components within a single enclosure containing MCP, magnetic starter, CPT, overloads, and pilot devices as called for.

B. Handle mechanism permanently connected to switch (operating through approximately a 180-degree arc) and installed in body of enclosure (door-mounted handles not allowed) with interlock to prevent unauthorized opening or closing of door with switch on.

C. Provision for padlocking disconnect handle in off position.

D. Disconnect handle having clear indication of switch(es) position.

E. Auxiliary switches where indicated on Contract Drawings.

F. Magnetic starter, auxiliary controls and motor circuit protector as specified.

2.04 RELAYS (0-25 AMPS)

A. See Section 16900.

2.05 INTRINSICALLY-SAFE BARRIERS

A. See Section 16900.

PART 3 EXECUTION

3.01 GENERAL

A. Install according to the requirements of the National Electric Code and as shown or noted on the Contact Documents.

B. Mount all contactors in an enclosure as individual units or in a control panel as part of a control system.

C. Enclosures and control panels to comply with Section 16161 as much as possible.

END OF SECTION

SECTION 16900

AUXILIARY CONTROLS AND RELAYS

PART 1 GENERAL

1.01 SECTION INCLUDES

A. Pushbutton.

B. Selector switches.

C. Indicating pilot lights.

D. Contact blocks.

E. Fuse blocks.

F. Time delay relays.

G. Relays.

H. Intrinsically safe barriers.

1.02 RELATED SECTIONS

A. General Provisions
B. General Specifications
C. Section 11296 - Conveyance Flushing System
D. All other Division 16 specifications
E. All Division 17 specifications

1.03 REFERENCES

NEMA ICS 1	General Standards for Industrial Control Systems
NEMA ICS 2	Standards for Industrial Control Devices, Controllers and Assemblies
NEMA ICS 6	Enclosures for Industrial Controls and Systems
NEMA ST 1	Standard for Specialty Transformers (Except General Purpose Type)

1.04 SUBMITTALS

A. Submit shop drawings under the General Provisions and General Specifications and Section 16055.

B. Submit shop drawings to NEMA ICS 1 indicating control panel layouts, wiring connections and diagrams, dimensions, support points.

C. Submit product data under the General Provisions and General Specifications and Section 16055.

D. Submit product data for each component specified. The submittal shall be included as part of the system in which the component is specified.

E. Submit manufacturer's installation instructions under the General Provisions and General Specifications and Section 16055.

F. Submit samples as requested by the Engineer.

1.05 PROJECT RECORD DOCUMENTS

A. Submit record documents under the General Provisions and General Specifications and Section 16055.

B. Project record documents shall be submitted to the Owner in electronic (compact disk) and hard copy formats.

C. Accurately record actual locations of control equipment. Revise diagrams included in Drawings to reflect actual control device connections.

1.06 OPERATION AND MAINTENANCE DATA

A. Submit operation data under the General Provisions and General Specifications and Section 16055.

B. Project record documents shall be submitted to the Owner in electronic (compact disk) and hard copy formats.

C. Include instructions for adjusting and resetting time delay relays, timers, and counters.

D. Submit maintenance data under the General Provisions and General Specifications and Section 16055.

E. Include recommended preventive maintenance procedures and materials.

1.07 QUALIFICATIONS

A. Manufacturer - Company specializing in manufacturing the products specified in this Section with minimum three years' experience.

PART 2 PRODUCTS

2.01 PILOT DEVICES

A. General

1. Pilot devices shall include indicating light, pushbuttons, and selector switches.

2. Heavy-duty, industrial type, construction.

3. Area Classification

a. Non-Classified Area Device Rating - NEMA 13 oil-tight.

b. Wet Area or Exterior Device Rating - NEMA 4 and NEMA 13 oil-tight and watertight.

4. Provide extra large nameplates in accordance with Section 16055 for all door or enclosure front-mounted devices.

5. Controls and relays shall be by one manufacturer wherever possible.

6. Provide enclosure for field mounted devices and individual controls in accordance with Section 16161.

7. 30-millimeter diameter.

8. Retaining ring and boot type.

B. Pushbuttons and Selector Switches (PB) and (SEL SW)

1. Lockout feature as indicated.

2. Color - Red for stop or terminate function; black for all others.

3. Operators

a. Provide "gloved hand" knobs for selector switches.

b. Provide "mushroom head" button on emergency stop pushbuttons.

4. Stackable contact blocks.

5. Devices shall be either momentary, maintained, spring return, push-pull, or other operational types as shown or otherwise specified.

6. Manufacturer NEMA 4 and 13 Oil and Water Tight - General Electric, Square D Type K.

C. Indicating Pilot Lights (IL)

1. Glass or plastic lens.

2. 120-volt LED transformer type.

3. Push-to-test type. When six or more pilot lights are used in control panels, a single lamp test switch can be used in lieu of all lamps being push-to-test.

4. Lens color shall be as follows:

FUNCTION	COLOR
Motor running	Red
Malfunction	Amber
Ready	White or Green

5. Manufacturers - General Electric, Square D, Crouse-Hinds, Allen Bradley, or equal.

2.02 CONTACT BLOCKS

A. Molded of an amorphous transparent polyamid material with high impact resistance and resistant to carbon tracking.

B. Contacts - Double break silver type rated at 10 amp at 120 VAC continuous.

2.03 FUSE BLOCKS

A. General purpose Class H, K, and R phenolic fuse block for dual-element cartridge fuses.

B. DIN rail mounted in control panels.

C. Manufacturer - Buchanan or equal.

2.04 ELAPSED TIME METERS (ETM)

A. Minimum six digit, non-resettable hour meter panel mounted.

B. For operation on 120 volts.
C. Manufacturer - General Electric or equal.

2.05 TIME DELAY RELAYS (TR)

A. Solid-state type with calibrated dial head or dip switch adjustment, encapsulated coil, snap-action switch assembly of number of poles indicated.

B. "On-Delay," "Off-Delay," or "On-Off Delay" dual head type as indicated; timing range intervals as shown or specified.

C. Bases shall have captive screws for locking fork solderless connectors, single tier design, with relay retainer clips.

D. Dust-tight construction.

E. Provide auxiliary contacts where indicated.

F. Contacts rated 10 amps resistive at 120 VAC.

G. Manufacturer - Diversified Electronics Series "TD;" Square D, Type JCK; Timemark 300 Series; or equal.

2.06 GENERAL PURPOSE CONTROL RELAYS (CR)

A. Units shall be plug-in type.

B. Use - Shall be used only for such things as indicating lights, alarm output, and motor starting coil seal in contact.

C. Number of poles and arrangement as shown or specified.

D. Contacts

1. Shall be rated 10 amps at 240 volts AC.

2. Material shall be silver cadmium oxide.

E. Coils shall be rated continuous duty.

F. Sockets

1. Supply with relay retainer clip.

2. Terminal connections with captive screw to accept locking fork solderless connectors.

3. Single tier design.

G. Manufacturers - Square D Company Class 8501 Type K relay and Type NR socket; Potter-Brumfield; or equal.

2.07 INDUSTRIAL CONTROL RELAYS (CR)

A. Industrial machine tool type.

B. Use - Shall be used to control equipment with power requirements, such as solenoid valves.

C. Contacts

1. Double break field convertible.
2. Rated 10 amps at 600 volts AC.
3. Rated 5 amps at 250 volts DC.

D. Coil shall be encapsulated, continuously rated of the voltage rating indicated on the plans.

E. Number of poles as indicated on Contract Drawings, but not less than four.

F. Holding and Operating Mechanism

1. Electrically held, electrically operated, General Electric Company CR-120A; Square D Company Class 8501, Type X; or equal.

2. Mechanically held/electrically held relay with mechanically-held attachment.

3. Time Delay - Pneumatic timer attachment for electrically-held delay; "on delay" or "off delay" as indicated on plans.

2.08 INTRINSICALLY-SAFE BARRIERS

A. Power supply, bistable input amplifier, intrinsically-safe for connections to passive devices located in hazardous areas.

B. Relay Output Stage - LED indicator type.

C. FM approved. Manufacturers: Pepperi & Fuchs WE Series; Square D, Class 8501; or equal.

PART 3 EXECUTION

3.01 GENERAL

A. Mount all individual controls in a suitable enclosure as specified per Section 16161.

B. Face-mounted pushbuttons, selector switches, pilot lights, and other devices shall have NEMA rating equal to enclosure for which they are provided.

C. Identify all auxiliary controls per the General Provisions and General Specifications and Section 16055.

D. The Contractor shall use control relays as described in Article 2.08 to control equipment with power requirements, such as solenoid valves.

3.02 FUSE BLOCKS

A. Size as indicated on Drawings or as required.

3.03 PUSHBUTTONS AND SELECTOR SWITCHES

A. Units shall be back-mounted wherever possible.

END OF SECTION

SECTION 16950

TESTING AND INSPECTION

PART 1 GENERAL

1.01 SECTION INCLUDES

A. Electrical power distribution and control circuit testing.

1.02 RELATED SECTIONS

A. General Provisions
B. General Specifications
C. Section 11296 - Conveyance Flushing System
D. All other Division 16 specifications
E. Division 17 sections as applicable

1.03 SUBMITTALS

A. Made in accordance with the General Provisions, General Specifications, Section 16055, and as specified herein.

B. Submit test records and reports for all testing.

1.04 CERTIFICATION OF TESTING

A. Perform all tests in the presence of a duly authorized representative of the Owner unless waived in writing by the Engineer. When the presence of such representative is so waived, certified results of the tests made and the results thereof shall be furnished by the Contractor.

B. Perform all tests in the presence of the Engineer. Give the Engineer written notice of all tests at least two weeks in advance.

1.05 TEST EQUIPMENT

A. Furnish all instruments and a qualified engineer to properly perform all tests required.

1.06 FACTORY-TRAINED SUPERVISION

A. Provide necessary factory trained supervision to check over equipment for proper functioning before putting the equipment into operation as may be required by these specifications. This shall include establishing a simulated fault on checking out the coordination of the protective devices.

B. Make necessary adjustments and testing in cooperation with the respective manufacturers and other disciplines when necessary. Perform all tests in accordance with the latest standards of the ANSI, IPCEA, IEEE and NEMA.

1.07 COSTS

A. Costs of all tests shall be borne by the Contractor and shall be included in the Contract price.

1.08 DAMAGES

A. If damage is indicated or observed during testing or from the review of tabulated data, replace defective or damaged materials and retest at no cost to the Owner.

PART 2 MATERIALS

2.01 TESTING EQUIPMENT

A. Furnish all test equipment required to correctly perform the system tests.

2.02 SPECIAL EQUIPMENT REQUIREMENTS

A. Up to 250-Volt Systems - 500-volt megger, hand crank only.

PART 3 EXECUTION

3.01 GENERAL

A. After completion of the work, thoroughly test the entire electrical system, including electrical work required for instrumentation, control and power, and adjust electrical system as required.

B. Test all electrical circuits to insure circuit continuity, insulation resistance, proper splicing, and freedom from improper grounds.

C. System performance test runs are required. Coordinate test runs of electrical systems with test runs of equipment served thereby (i.e., mechanical and process systems).

3.02 GENERAL TESTING METHODS

A. Panels - Test each panel with mains disconnected from the feeder, branches connected, branch circuit breakers closed, all fixtures in place and permanently connected,

lamps removed or omitted from the sockets, and all wall switches closed.

B. Feeders - Test with the feeders disconnected from the panels.

C. Individual Power Circuits - Test each individual power circuit at the panel with the power equipment connected for proper operation.

3.03 EQUIPMENT TESTING (600 volts and below)

A. Megohmmeter Tests

1. Conduct megohmmeter tests of the insulation resistance of rotating machines and power distribution feeders down to panelboard feeders. The results will be accepted when the megger shows the insulation resistance to be not less than 25 megohms at 20 degrees C (68 degrees F) using a 500-volt megger. Adjust the resistance factors per NETA-ATS Table 10.14 for temperatures above or below 20 degrees C. Wait 1 minute between each test for all conductors in the same enclosure and each conductor and ground.

2. Perform megohmmeter testing (Insulation Resistance Test) of all motor power and control wiring after the cables are in place and just prior to final terminations. Record all data as per Exhibit A. Lighting and receptacle panelboard branch circuits are not megohmmeter tested.

B. Voltage and Amperage Testing

1. Check all motor amperage while the unit is running at as close to operating load as possible. Record voltage on each line and the amp draw for each leg. Provide results in a typed report format and submit as part of the Contractor's closeout package.

3.04 GROUNDING SYSTEM

A. Test the grounding system to verify a resistance to ground of 5 ohms or less. If the resistance is greater than 5 ohms, modifications shall be made to the system per Section 16055. Perform test a minimum of 90 days after the installation of the ground rods. Submit a record/report to the Engineer. Include the following:

1. Time, date, temperature, frost information depth (if applicable), and weather conditions.

2. Location of ground grid under test.

3. Date of ground grid installation.

4. Driven depth of electrodes.

5. Moisture content of earth at time of measurement (wet, dry, etc.).

6. Ground test equipment, model numbers, and last date of calibration.

7. Detailed description of method used.

8. Plot of "distance from ground grid versus resistance." Resistances shall range from 0-50 ohms with enough points to produce a smooth curve.

9. Maintenance information and recommendations (if applicable).

B. Test all grounding conductors and grounding systems for continuity. Where continuity does not exist, conditions will be corrected by an approved method and the system retested.

3.05 SYSTEM CHECKS

A. Preliminary

1. Connect all motors to protective devices and controls to give proper motor acceleration and correct motor rotation. Interconnect the control wiring to all the control devices associated with a machine, a group of machines, or other device to produce the correct operation, timing, and/or sequencing of the equipment.

2. Adjust overload elements in motor starters and check for coordination with the actual installed motor characteristics. Replace any overload element that is inadequate.

3. Check all motor nameplates for verification of proper voltage, horsepower, speed, phase, and power factor.

B. Operational

1. Then give the equipment an operational test to determine that all components including motors, controls, protective and switching devices, and auxiliary associated equipment are in operable

condition and can function as described and shown on relevant specifications, operating instructions, and drawings.

2. Take motor current reading at full load or as close to full load as the driven machine will develop. If the ammeter reading is over the rated full load current or the proper current for the load at which the machine was operated, notify the Engineer and the motor installer. Verify and determine if the reason is electrical or otherwise. Correct any electrical problems and retest. If the problem persists, advise the Engineer and motor installer of the discrepancy and take the necessary corrective action.

3. Remove any electrical causes of any motor operating above full load rating instead of increasing the overload relay trip rating. If, after verification that no electrical problem persists, notify the Engineer and motor installer.

3.06 CLOSEOUT PROCEDURES

A. General - Sequence closeout procedures so that work will not be endangered or damaged, and so that every required performance will be fully tested and demonstrated. Closeout shall be in accordance with the General Provisions and General Specifications and as required herein.

B. Final Operational Check - Make a check of each item in each system to determine that it is set for proper operation. With the Engineer and motor installing contractor present, operate each system in a test run of appropriate duration to demonstrate compliance with performance requirements. During the following test runs, make final corrections or adjustments of systems to refine and improve performances where possible, including electrically caused noise and vibration reductions, elimination of hazards, better response of controls, signals and alarms, and similar system performance improvements. Provide testing or inspection devices to permit observation of actual system performances and shall demonstrate that controls and items requiring service or maintenance are accessible.

C. Cleaning and Lubrication - After final performance test run of each electrical system, clean system both externally and internally, comply with manufacturer's instructions for lubrication of both power and hand operated equipment, and remove excess lubrication, touch up minor damage to factory-painted finishes and other

painting specified as electrical work, and refinish work where damage is extensive.

D. Operating Instructions - General operating instructions are required. In addition to specific training of the Owner's operating personnel specified in the individual sections, and in addition to preparation of written operating instructions and compiled maintenance manuals specified elsewhere in these specifications, provide general operating instructions for each operational system and equipment item of electrical work, and coordinate instructions with instructions for mechanical work, and other equipment where associated with electrical systems or equipment.

E. System Description and Operation

1. Perform in the presence of the Owner, the Owner's operating personnel and the Engineer.

2. Describe each basic electrical system and explain identification system, displayed diagrams, signals, alarms and audio visual provisions.

3. Describe interfaces with mechanical equipment, including interlocks, sequencing, startup, shutdown, emergency, safety, system failure, security, and similar provisions.

4. In the presence of the Owner's personnel, display and conduct a "thumb-through" explanation of maintenance manuals, record drawings, spare parts inventory, storage and extra materials, meter readings, and similar service items.

3.07 CONTINUED SYSTEM OPERATIONS SUPPORT

A. Coordinate the Owner's takeover of electrical systems with takeover of mechanical systems, including the provision of skilled electrical operating and maintenance personnel until the time the Owner's personnel take over operation of entire mechanical and electrical operation. Respond promptly with continued consultation and services (beyond takeover date) on electrical systems, matching required continued services on associated mechanical systems and equipment until the end of the warranty period.

3.08 DOCUMENTATION PROCEDURE

A. Signed commitments are required. The transfer of electrical systems to the Owner for operation will not proceed until guarantees, warranties, performance

certifications, maintenance agreements and similar commitments to be signed by Contractor and other entities have been executed and transmitted to and accepted by the Engineer for placement in the Owner's records.

3.09 THERMOGRAPH INSPECTIONS

A. Perform thermograph inspections on all service terminations, subfeed terminations, and major power splices. Testing on major power distribution equipment will be performed running at a minimum of 70 percent capacity. Testing on individual pieces of equipment will be performed while the unit is operational at rated load and has operated for at least 30 minutes for continuously operated equipment or near the end of a cycle for equipment that operates on/off. Loads shall be a minimum of 40 percent of full load. Readings at overcurrent devices and starters will be for line and load; motors will be connections in motor terminal boxes. Provide a report of test results to the Owner including indication of any actions taken to resolve abnormal readings. See Exhibit B at the end of this section. All thermographic tests shall be reported on this form. All equipment thermographs shall be submitted to the Owner in both electronic (compact disk) and hard copy (color photo paper) formats.

(continued)

EXHIBIT A

TESTING AND INSPECTION

ELECTRICAL INSULATION TEST RECORD
INSULATION RESISTANCE TEST

EQUIP. I.D. CKT/MARK NO.	TEST VOLTAGE	PHASE TO GND. MEG OHMS				PHASE TO PHASE MEG OHMS						DATE TESTED
		A	B	C	N	A-B	A-N	B-C	B-N	C-A	C-N	

TEST EQUIPMENT CONTROL NO. _____ _____ _____

REMARKS: _____

_____

_____

PERFORMED BY: _____ DATE: _____

APPROVED BY: _____ DATE: _____
Test Engineer

EXHIBIT B

TESTING AND INSPECTION
THERMOGRAPHIC TERMINATION TEST

EQUIPMENT	AMBIENT (1)	LINE/PRIMARY			LOAD/SECONDARY			LOAD CONDITION (% OF FULL)	COMMENTS (2, 3)
		1	2	3	1	2	3		

Thermograph Model _____

Date of Test _____ Conducted by _____

Outdoor Temperature _____ Room Temperature _____

Owner/Engineer Witness _____

(1) Ambient is the breaker case temperature, transformer winding temperature, or motor housing temperature. For bus or cabling, it shall be the temperature of the bus or cable a minimum of 24 inches from the splice or termination.

(2)

TEMPERATURE DIFFERENCE	CONDITION	ACTION
1°C to 3°C	Possible deficiency	Investigate, i.e., clean terminations/retorque
4°C to 15°C	Deficiency	Determine problem and repair; retest
16°C and above	Major deficiency	Immediate shutdown; determine problem and repair and retest

(3) Indicate any discrepancies the cause of any temperature differences and indicate action to be taken.

Test Parameters:

- Imaging equipment shall be capable of detecting a minimum temperature difference of 1°C at 30°C.
- Equipment shall detect and convert emitted radiation to a visual signal.
- Tests to be run during periods of maximum possible loading, but at least 40% of rated load.

END OF SECTION

SECTION 17105

FIBER OPTIC COMMUNICATION SYSTEMS

PART 1 GENERAL

1.01 DESCRIPTION

A. Furnish and install fiber optic cables and appurtenances necessary for the flushing gate PLC and appurtenances to communicate with the Owner's existing GE FANUC Cimplicity supervisory software over the existing SCADA network.

B. Equipment and labor specified in this specification section shall be supplied and installed by a single manufacturer that has sole responsibility for the function of the fiber optic system and its final performance.

1.02 RELATED SECTIONS

A. Section 11296 - Conveyance Flushing System
B. Section 16055 - Electrical Work

1.03 REFERENCE STANDARDS

A. National Fire Protection Association (NFPA) - NFPA 70 National Electrical Code (NEC) Article 70.

B. Underwriters Laboratories, Inc. (UL)

1. UL 1581 VW-1; Vertical Tray Cable Flame Test.
2. UL 1666 Riser Cable.

C. IEEE Standard 383-1974 Flame Retardancy.

D. ANSI/NECA/BICSI 568-2001, Standard for Installing Commercial Building Telecommunications Cabling.

E. ANSI/TIA/EIA-569-A for maximum length of conduit and bends between pull points and pull box sizing.

F. ISO/IEC 11801 - Type OM3 fiber

G. IEC 60793-2-10 - Type A1a.2 fiber

1.04 DEFINITIONS

A. Attenuation - The decrease in magnitude of transmission signal strength between points, expressed as the ratio of output to input.

B. Bandwidth - A range of frequencies, specifically the difference between the upper and lower limits of the range, expressed in Hz.

C. Loss - Attenuation of the optical signal, measured in dB.

D. Numerical Aperture - the light-gathering ability of a fiber. The maximum angle to the fiber axis at which light will be accepted and propagated through the fiber.

E. Plenum - A designated area used for transport of environmental air as part of the air distribution system. Because it is part of the air distribution system, cables installed in this spare require a higher fire rating (i.e. plenum rated).

F. Bend Radius - Maximum radius that a cable can be bent to avoid physical or electrical damage or cause adverse transmission performance.

G. OTDR - Optical Time Domain Reflectometer

H. Cable Support System - A combination of conduits, cable trays, support hooks, tie wraps, and/or any other hardware pieces used in a cabling installation to support cables.

I. Terminate/Termination - Termination of fiber includes provision of connectors on individual fibers, also referred to as "tipped". Termination of fiberoptic cables includes provision of a breakout kit and installation of connectors on individual fibers.

J. SCADA Architecture Diagram - Contract drawing illustrating the project's network architecture. Identifies relative routing between fiber consumers. Actual routing and lengths shall be determined using ductbank schedules and through coordination with the General Contractor.

K. Channel - Two fibers are required for one channel of communication, which is comprised of a transmit and receive fiber.

1.05 SUBMITTALS

A. Shop Drawings - Submit in accordance with the provisions set forth in the Special Project Conditions, General Provisions, and General Specifications and indicated below. Detailed shop drawings shall be submitted prior to obtaining any material in connection with this section.

1. Cable pulling plan that specifies the sequence of work tasks, materials and equipment used, and a schedule for the work. AutoCAD 2008 drawings illustrating all runs of fiber, patch panels, network cabinets, transition from jacked cable to individual fibers, Ethernet switches, and PLCs.

2. Proposed test equipment to be used including OTDR and power meter, including make and model number. Detail the exact procedure that will be utilized to test cable reels once they are delivered to the site. Separately detail the procedure that will be utilized to test installed cables.

3. Link Loss Budget Analysis - Calculated point-to-point (transmit point to receive point) optical power loss of each optical fiber using proposed installed cable lengths. Include all losses through connectors and patch panels. Submit calculated values including sketches graphically showing the proposed cable route, distances, itemized losses, and locations of terminations. After testing installed network, these calculated values shall be compared with end-to-end measured values.

4. Submit a 1-foot sample of the proposed fiber optic equipment to be provided as follows: fiber optic cable with breakout kit, tipped, and a single fiber adapter panel. Sample shall display labeling technique. Only one sample need be submitted in the Engineer's copy of the shop drawings, not one for every shop drawing copy. Sample may be tested, and will be retained, by the Engineer.

B. Project Record Documents - Submit under provisions of the Special Project Conditions, General Provisions, and General Specifications. The following submittal requirements are to complement the above requirements.

1. Comparison of as-installed (tested) losses to calculated losses. Include cable end-to-end and node-to-node (transmit to receive) test data.

1.06 COORDINATION

A. Take the lead on coordinating switch and fiber operation and installation requirements with the flushing gate system supplier and the Owner. Coordinate with the General Contractor to obtain contact information for these fiber consumers.

B. Coordinate spacing of spools in fiber optic patch panel with fiber optic cable and fiber optic patch cord manufacturer recommendations for installed bending radii.

C. Coordinate with other trades for mounting locations for fiber optic patch panels.

D. Coordinate space mounting requirements to minimize fiber optic jumper cable lengths. Locate fiber patch panel to maintain shortest possible fiber optic jumper cable lengths. Limit distance of separation to 15 feet of jumper cable length.

1.07 DELIVERY, STORAGE AND HANDLING

A. Provide in accordance with Sections 01010 and 01600.

1.08 SPARES

A. Provide one preterminated/tipped and tested spare fiberoptic jumper cable for each installed fiberoptic jumper cable. Provide a rigid case to accommodate all uninstalled spare fiber optic jumpers.

B. Provide one fiber adapter panel (FAP) for each type used.

PART 2 PRODUCTS

2.01 FIBER OPTIC CABLE

A. Manufacturer

1. Corning, Model ClearCurve.
2. OFS Laboratories, Model LaserWave 300.
2. Belden.
3. Berk-Tek.

B. General

1. Provide multi-mode, optical glass fiber cores compatible with LED-based transmission systems and the Ethernet switches supplied under Section 11296 and as noted herein. Suitable for both Fiber Optic Inter-Repeater Link and Fiber Distributed Data Interface networks.

2. All-plastic fiber-core construction is not acceptable.

3. Provide in continuous (without termination) lengths as required to connect Ethernet devices in locations shown on the Contract Drawings.

C. Fiber Optic Cable

1. Heavy duty, tight-buffered or gel-filled construction with additional strength members, PVC inner jacket, and oil, water, and chemical resistant, UV stabilized, flame retardant, polyethylene outer jacket, designed for indoor/outdoor application and direct burial.

2. Cable Specifications

a. Fiber Size - 50 micron/125 micron (core/cladding diameter).

b. Fiber Count - Eight fibers (minimum).

c. Maximum Short-Term Tensile Load - 300 pounds.

d. Maximum Long-Term Tensile Load - 180 pounds.

e. Crush Resistance - 80 pounds per square inch.

f. Operating Temperature - -40 to +50 degrees C.

g. Fibers shall have the following optical properties:

1) Maximum attenuation at 850 nm wavelength - 2.5 dB/km

2) Maximum attenuation at 1300 nm wavelength - 0.8 dB/km

3) Minimum bandwidth at 850 nm wavelength 1500 MHz/km

4) Minimum bandwidth at 1300 nm wavelength - 500 MHz/km.

5) Numerical aperture - 0.250 +/- 0.015.

2.02 FIBER TIPS/FIBER CONNECTORS

A. Connectors shall be duplex SC connectors as required by the Ethernet switches. Connector specifications shall be as follows:

1. Connector Loss (typical) - 1 dB.
2. Durability (mating cycles) - 1000 (minimum).

3. Repeatability - Less than 0.2 dB.
4. Operating Temperature - -40 to +80 degrees C.

B. All fibers, including unused fibers, shall be terminated/tipped. Provide flexible vinyl protectors for terminal connectors to prevent damage to terminal connector ends.

2.03 FIBER PATCH PANELS

A. Provide fiber optic patch panels for installation in the conveyance flushing gate control panel (Section 11296) and at the Midland Avenue Regional Treatment Facility (RTF).

B. Characteristics

1. Wall-mounted, all metal construction enclosure in color Black.

2. Separate doors for service side and user side compartments with keyed locks.

3. Supply fiber optic cable routing kit, including grommets, cable ties, spools, strain relief bracket and ID/caution labels.

4. RoHS compliant.

5. Spools must be spaced to accommodate fiber optic cable and fiber optic patch cord minimum installed bending radii.

B. Provide Fiber Adapter Panels (FAPs) by the same manufacturer as the fiber patch panel and of model designed specifically for the supplied patch panel.

1. FAPs shall screw into place, compression fittings are not acceptable.

2. Each FAP shall have a sufficient quantity of connectors to accommodate a single fiber optic cable.

C. Coordinate space mounting requirements to minimize fiber optic jumper cable lengths. Locate fiber patch panel to maintain shortest possible fiber optic jumper cable lengths. Limit distance of separation to 15 feet of jumper cable length.

D. Provide preterminated and tested duplex fiberoptic jumper cables for each fiber in the fiber optic cable. Jumpers shall be of sufficient length to interconnect the patch panel to the Ethernet switch or fiberoptic media.

2.04 FIBER OPTIC JUMPER CABLES

A. Provide fiber optic jumper cables in accordance with the following requirements:

1. A single jumper cable shall be comprised of two fibers suitable for transmit and receive with duplex SC connectors at both ends. Fiber sheaths shall be bonded the entire length of the jumper cable.

2. Provide one jumper cable for each pair of fibers in the fiber optic cable. For both used and unused channels. These quantities do not count as uninstalled spares.

3. 50 micron/125 micron (core/cladding diameter) fiber.

4. Suitable for use with the supplied fiber optic cable.

5. Lengths as required to interconnect fiber optic patch panels to the fiber switches shown on the Contract Documents.

6. Provide rubber boots for each spare fiber's connector protecting the exposed glass fiber light emitting tip from damage.

2.05 ETHERNET SWITCHES (DIN-RAIL MOUNTED)

A. General

1. Provide DIN-rail mounted Fast Ethernet switches for mounting in the Flushing Gate Control Panel enclosure and the existing PLC M72 enclosure located in the Midland Ave Regional Treatment Facility (RTF) South Electric Room.

2. Provide One 16-port switch in the RTF and One 8-port in the Flushing Gate Control Panel

3. Specifications

a. Software Layer 2 Enhanced with Internet Group Multicast Protocol (IGMP) snooping enabled.

b. Light source optimized to function with 50 micron/125 micron (core/cladding diameter) fiber optic cabling with duplex SC connectors.

c. Fiber optic link budget (loss) no greater than 8.0 dB at 1300-nanometers over 0 to 5,000 meters.

d. DIN-rail mounted, fanless design.

e. Manufacturer-rated for industrial use, including temperatures of 0 to 60 degrees C, humidity 10 to 95 percent non-condensing, and a Mean Time Between Failures (MTBE) manufacturer rating greater than 40 years.

f. IEC 60068-2-27 conformity for shock. Capable of withstanding 18 shocks at 15 g of 11 ms in duration.

g. IEC 60068-2-6 conformity for vibration.

h. EN 61000-4 conformity for immunity to electro-magnetic interference (EMI).

i. Support 256 virtual Local Area Networks (VLANs).

j. Removable terminal blocks with screw compression.

k. Capable of being powered from redundant/dual DC power supply sources.

l. LEDs for Link and Activity per port. Failure LED for switch.

m. Capable of supporting a self-healing, fiber optic ring structure with a reconfiguration time less than 0.3 seconds.

n. Device configuration and monitoring shall be achieved through a web-browser interface via the Ethernet TCP/IP protocol. The device shall include an embedded web server to access configuration and status pages. Ethernet switches that utilize separate configuration software packages are not acceptable.

o. One Form C relay output contact, user-configurable to indicate start-up failure, a broken ring segment, or other warning events.

4. Manufacturers shall be:

   a. Moxa Technologies, EDS 516A Series.
   b. Hirschmann, RS20 Series.
   c. Allen-Bradley, Stratix 8000 Series.

2.06 ACCESSORIES

A. Provide breakout kits on fiber optic cable prior to fiber terminations. Kits shall be secured to the jacketed cable and separate and support each fiber as it exits the jacketed cable. Provide protective sheathing for individual fibers after the breakout kit. Additional protective sheathing shall provide adequate rigidity to prevent bending the individual fibers beyond their minimum bending radius. Individual fibers shall not be visible before or after the breakout kit.

B. Each fiber exiting the breakout kit shall be insulated in a protective rubber sheath. Bare fibers are not acceptable anywhere within the fiber network.

PART 3 EXECUTION

3.01 GENERAL

A. Install cable and connectors as indicated on the Contract Drawings and as specified in this section.

   1. Install connectors on all fibers in each cable.

B. Provide all material, equipment, and labor to install the fiber optic cables as indicated and as specified.

C. Perform work in accordance with the National Electric Code, terminal connector manufacturer, and cable manufacturer requirements.

D. Perform work in accordance with the cable manufacturer recommendations and pertinent sections of ANSI/NECA/BICSI 568-2001. ANSI/NECA/BICSI 568-2001 shall be referred to in defining work performed in a "neat and workmanlike" manner. Conformance to all pertinent sections of ANSI/NECA/BICSI 568-2001 is required, the following are highlights from ANSI/NECA/BICSI 568-2001 that will be inspected:

   1. Cable support system planning, documentation, and sequence of installation.

   2. Minimum separation distances from possible sources of EMI.

3. Section 4, Pulling Cable.

3.02 INSTALLATION

A. Install cables in the conduit. Inspect conduit prior to pulling in cables. Rod and swab out conduits and ducts prior to installing cables. Notify the Engineer of any conditions, which would prevent installation of the specified cables, in writing before proceeding with the installation.

New fiber optic cable shall be installed between the new conveyance flushing control panel and the South Electric Room of the Midland Avenue RTF. The main routing between the two locations is comprised of a spare 4-inch conduit passing through electric manholes. At the RTF, the conduit ends in a wall-mounted junction box just inside the wall in the southeast corner of the South Electric Room. Contractor shall provide additional conduit and accessories to provide a complete route for the fiber optic cable to be terminated to an existing switch installed in PLC-M72. See the Electrical drawing for additional detail.

Contractor shall verify site conditions prior to submitting shop drawings.

B. Adhere to ANSI/TIA/EIA-569-A for maximum length of conduit and bends between pull points and pull box sizing. No one conduit segment shall be more than 100 feet in length with no more than two, 90-degree bends allowed in one segment.

C. Install armor jacketed multi-fiber cables in underground ducts. Armor jacketed multi-fiber cables may also be used in conduit systems provided inside buildings and structures.

D. Premise cables may also be installed in the conduit systems provided inside buildings and structures.

E. Lubricate cables during installation. Do not exceed cable manufacturer's specifications for tensile strength and bending radius.

F. Label cables and reels prior to pulling cable into place.

G. Provide breakout kits, termination and patch panels, pigtails, and jumpers as required to install a complete network as indicated. Termination panels shall be wall or rack mounted. Do not mount termination panels in manholes or outside of buildings or structures.

H. Provide adequate put-up lengths on cable reels to make termination-to-termination runs without splices. Spliced cables are not acceptable.

I. Support cables in riser conduits at intervals as required by NEC and cable manufacturer.

J. Installation tools and materials shall be approved by the cable manufacturer.

3.03 IDENTIFICATION

A. Cables - Label cable in accordance with ANSI/TIA/EIA-606, which details specific label format for identification of where cable originates and terminates.

B. Individual Fibers - Label each termination point on each end of the fiber including spares. Each fiber shall be labeled as "PLC-M72/Fiber 1", "PLC-M72/Fiber 2", "PLC-M72/Fiber 3", "PLC-M83/Spare 1," etc.

C. Tag each cable in junction boxes, patch panels, manholes, and anywhere else fiber optic cabling may be accessed further than 10 feet from termination.

3.04 CHECKOUT AND TESTING

A. Upon receipt of fiber optic cable reels at the site, perform pre-installation ("on the reel") OTDR measurements on each strand of optical fiber to verify attenuation, length and continuity. The optical fiber shall be tested using a multimode OTDR at 850-nm wavelength. Record the results of all measurements and submit to the Engineer within one week after cable delivery to the site. Cable reels that fail continuity or that have higher than specified attenuation (greater than 3 dB) shall be subject to rejection and shall be replaced at no additional cost to the Owner.

B. Make the following tests after cable installation:

1. Visually inspect terminations for out-of-round condition and surface defects such as micro-chips and cracks using a 200x inspection microscope.

2. Upon completion of the cable installation, including all connectors, perform 100 percent bi-directional end-to-end loss testing on each optical fiber. The multimode fiber shall be tested using Light Emitting Diode (LED) sources (insertion loss test set and power meter) operating at 850 nm wavelength.

3. The calculated and measured values of the end to end shall vary by no more than ±0.75 dB. End-to-end losses shall not exceed 3 dB. In the event that any differences are in excess, implement troubleshooting techniques and methods to provide agreement. If the discrepancies cannot be reconciled, the cable installation shall be removed, replaced, and retested at no additional cost to the Owner.

C. Verify proper identification numbering and color coding on cables and fibers.

D. Install, test, and service equipment as necessary to accommodate the sequence of construction.

E. Perform an additional four visits of onsite testing of fiber with OTDR test equipment at the request of the Engineer to assist in the troubleshooting of network issues as necessary to eliminate the fiber as the source of potential network issues.

3.05 CERTIFICATION OF TESTING

A. Unless waived in writing by the Engineer, all tests shall be made in the presence of a duly authorized representative of the Owner. When the presence of such representative is so waived, certified results of the tests made and the results thereof shall be furnished by the Contractor.

B. All tests shall be performed in the presence of the Owner. Written notice of all tests shall be given to the Engineer and Owner at least two weeks in advance.

END OF SECTION

PAYMENT ITEMS

SECTION 1 - STIPULATED MAXIMUM LUMP SUM ITEMS

PI-1.01. Description

Under this Section, the Contractor shall provide all labor, materials, and equipment required to perform and fully construct the work of the stipulated maximum lump sum items in accordance with the Contract Documents and as directed by the Engineer; construct the structures and appurtenant facilities; furnish, install, test, meet the specified performance requirements, place into satisfactory operation, and maintain until final acceptance, the equipment, piping, and systems pertinent thereto; and fully complete the work of the stipulated maximum lump sum items, as shown, specified, encountered in the work, or scheduled.

The work of this section also includes all accessories, appurtenances and other work required to complete this Contract, except those related to the work of these items but specifically included under other payment item sections of this Contract.

The schedules of the work which may be included have been shown solely for the convenience of the Owner, Engineer, and Contractor, and do not necessarily include all of the items of work which are shown and specified and which are needed under this Contract.

The Owner does not represent that the stipulated maximum unit prices for these items reflect the actual value of the work involved. Such prices merely represent maximum amounts that will be paid the Contractor for the work involved. If, in the opinion of the Contractor, the stipulated maximum unit prices do not reflect the actual value of the work involved, lower unit prices may be written in the space provided in the Bid and the given stipulated maximum unit price for that specific item voided. Any bid with a unit price greater than the stated stipulated maximum unit price shall be revised and recalculated to the Stipulated Maximum Unit Price (as stated in the Bid).

PI-1.02. Payment

Payment for the work of stipulated maximum lump sum items will be made at the Owner's stipulated maximum unit price or the Contractor's Bid, whichever is less, as stated in the Bid for each item included under this section. Payment for the work of stipulated maximum lump sum items will be made in accordance with the approved lump sum bid price breakdowns.

PI-1.03. No Payment

No payment will be made under this section for work performed by the Contractor to replace defective work, for rework, or for work which is not specified in the Contract Documents or ordered by the Engineer. No payment will be made under this section for work related to the work of this section which is specifically included under other payment item sections.

PAYMENT ITEMS

SECTION 1 - STIPULATED MAXIMUM LUMP SUM ITEMS

Page Left Intentionally Blank

PAYMENT ITEMS

SECTION 1 - STIPULATED MAXIMUM LUMP SUM ITEMS

Item 1.1 – Mobilization/Demobilization

PI-1.1-01. Description

Under this Item, the Contractor shall provide all labor, materials, and equipment needed to perform mobilization/demobilization of construction operations, including shops, storage areas, office, temporary facilities, and such sanitary and other facilities as are required by local or state law or regulation. The cost of required insurance and bonds and/or any initiation of the Contract work is also included in this item.

PI 1.1-02. Work Included

Work under this item shall generally be comprised of all labor, materials, and equipment required for Mobilization/Demobilization, complete, including, but not limited to, the following:

- All necessary insurance and bonds.
- Schedule of values.
- List of subcontractors.
- Schedule of shop drawings and submittals.
- Project specific safety plan.
- Compiling all pre-construction videos, photographs and logs as required in the Contract Documents (with the exception of those required under Rock Extrication).
- Setting up and tearing down general plant, storage, and staging areas, and temporary facilities and controls.
- Furnish, install, move, maintain, and remove construction signs, including project sign.
- Furnish, install, relocate (if necessary), maintain and remove the Engineer's Field Office Area including clearing and grubbing, grading, installation of gravel base, driveways, parking areas, Engineer's Field Office, Contractor's Construction Trailer, signage, utility services, and sanitary and other facilities as are required by local or state law or regulation, as required by the Contract Documents.
- Submittal of all project close out material.
- Demobilization.

PAYMENT ITEMS

SECTION 1 - STIPULATED MAXIMUM LUMP SUM ITEMS

PI-1.1-03. Related Work Not Included

The following items of work closely related to the work of Mobilization/Demobilization are specifically not included under this Item:

- Miscellaneous Work
- Site Security
- Rock Extrication

PI-1.1-04. Basis of Payment

Payment for Mobilization/Demobilization will be made at the lump sum price stated in the Bid, with partial progress payments made in accordance with the approved lump sum bid price breakdown. A stipulated maximum price, as identified on the Bid, will apply to this Payment Item.

PAYMENT ITEMS

SECTION 2 - STIPULATED MINIMUM UNIT PRICE ITEMS

PI-2.01. Description

Under this section, the Contractor shall provide all labor, materials, and equipment required to perform and fully construct the stipulated minimum unit price items as ordered by the Engineer. All work under this section shall be done only upon specific orders of the Engineer and shall be only to the lines and grades ordered.

The work of this section also includes all accessories, appurtenances and other work required to complete this Contract, except those related to the work of these items but specifically included under other payment item sections of this Contract.

The schedules of the work which may be included have been shown solely for the convenience of the Owner, Engineer, and Contractor, and do not necessarily include all of the items of work which are shown and specified and which are needed under this Contract.

The Owner does not represent that the stipulated minimum unit prices for these items reflect the actual value of the work involved. Such prices merely represent minimum amounts that will be paid to the Contractor for the units used. If, in the opinion of the Contractor, the stipulated minimum unit prices do not reflect the actual value of the work involved, higher unit prices may be written in the space provided in the Bid and the given stipulated minimum unit price for that specific item voided. Any bid with a unit price less than the stipulated minimum unit price shall be revised and recalculated to the stated Stipulated Minimum Unit Price (as stated in the Bid).

PI-2.02. Payment

Payment for the work of stipulated minimum unit price items will be made at the Owner's stipulated minimum unit prices or the Contractor's Bid, whichever is greater, as stated in the Bid for each item included under this section, as measured by the Contractor and verified by the Engineer in accordance with the Basis of Payment for each Payment Item.

PI-2.03. No Payment

No payment will be made under this section for work performed by the Contractor to replace defective work, for rework, for work which is outside the limits ordered of for work which is not ordered by the Engineer. No payment will be made under this section for work related to the work of this section which is specifically included under other payment item sections.

PAYMENT ITEMS

SECTION 2 - STIPULATED MINIMUM UNIT PRICE ITEMS

Page Left Intentionally Blank

PAYMENT ITEMS

SECTION 2 - STIPULATED MINIMUM UNIT PRICE ITEMS

Item 2.1 – Excavation Below Subgrade

PI-2.1-01. Description

Under this Item, the Contractor shall provide all labor, materials, and equipment required to perform Excavation Below Subgrade (either mechanically or by hand), as ordered by the Engineer.

PI-2.1-02. Work Included

Work under this Item shall generally be comprised of all labor, materials, and equipment required for Excavation Below Subgrade, complete, including, but not limited to, the following:

- Excavation.
- Additional dewatering, as required.
- Additional temporary excavation support system, as required.
- Removal and disposal of excavated materials.
- Maintenance and protection of utilities.
- Additional maintenance and protection of traffic, as required.

PI-2.1-03. Related Work Not Included

The following items of work closely related to the work of Excavation Below Subgrade are specifically not included under this Item:

- Miscellaneous Excavation
- Maintenance and Protection of Traffic
- Dewatering
- Temporary Excavation Support System
- Bioretention Basin
- Rock Extrication
- Select Fill Materials
- Geotextile Fabrics

PAYMENT ITEMS

SECTION 2 - STIPULATED MINIMUM UNIT PRICE ITEMS

- Temporary Excavation Support System to Remain in Place as Ordered by the Engineer

PI-2.1-04. Basis of Payment

Payment for Excavation Below Subgrade will be made based on the calculated volume (in cubic yards) of excavation, computed by using the actual width and the actual length not to exceed limits indicated on the Contract Drawings and the actual depth excavated below subgrade as ordered by the Engineer, multiplied by the unit price per cubic yard stated in the Bid.

No payment will be made under this Item for Excavation Below Subgrade required as a result of the Contractor's failure to adequately protect stable, exposed subgrade from damage or for any excavation outside of the maximum trench excavation limits indicated on the Contract Drawings.

PAYMENT ITEMS

SECTION 2 - STIPULATED MINIMUM UNIT PRICE ITEMS

Item 2.2 – Miscellaneous Excavation

PI-2.2-01. Description

Under this Item, the Contractor shall provide all labor, materials, and equipment required to perform Miscellaneous Excavation (either mechanically or by hand), as ordered by the Engineer for the purpose of confirming locations of existing utilities and other subsurface features.

PI-2.2-02. Work Included

Work under this Item shall generally be comprised of all labor, materials, and equipment required for Miscellaneous Excavation, complete, including, but not limited to, the following:

- Excavation outside of the specified trench limits for other Payment Items required to locate existing utilities and other subsurface features as ordered by the Engineer.
- Additional dewatering, as required.
- Additional temporary excavation support system, as required.
- Transportation and/or stockpiling of excavated materials to be used as common fill or topsoil.
- Maintenance and protection of utilities.
- Additional maintenance and protection of traffic, as required.
- Backfilling excavation with compacted common fill materials.
- Temporary pavements and other temporary restoration of backfilled excavation as required for public safety, vehicle traffic, and pedestrian traffic.

PI-2.2-03. Related Work Not Included

The following items of work closely related to Miscellaneous Excavation are specifically not included under this Item:

- Excavation Below Subgrade
- Bioretention Basin
- Restoration of Non-Paved Surfaces
- Modifications to Existing CSO 044
- Maintenance and Protection of Traffic

PAYMENT ITEMS

SECTION 2 - STIPULATED MINIMUM UNIT PRICE ITEMS

- Rock Extrication
- Select Fill Materials
- Concrete Foundation for Street Pavement
- Bituminous Asphalt Pavements
- Dewatering
- Temporary Excavation Support System
- Temporary Excavation Support System to Remain in Place as Ordered by the Engineer

PI-2.2-04. Basis of Payment

Payment for Miscellaneous Excavation will be made based on the calculated volume (in cubic yards) of excavation, computed by field measuring the actual average width, length and depth excavated as ordered by the Engineer, multiplied by the unit price per cubic yard stated in the Bid.

PAYMENT ITEMS

SECTION 3 - LUMP SUM ITEMS

PI-3.01. Description

Under this Section, the Contractor shall provide all labor, materials, and equipment required to perform and fully construct the work of the lump sum items in accordance with the Contract Documents and as directed by the Engineer; construct the structures and appurtenant facilities; furnish, install, test, meet the specified performance requirements, place into satisfactory operation, and maintain until final acceptance, the equipment, piping, and systems pertinent thereto; and fully complete the work of lump sum items, as shown, specified, encountered in the work, or scheduled.

The work of this section also includes all accessories, appurtenances and other work required to complete this Contract, except those related to the work of these items but specifically included under other payment item sections of this Contract.

The schedules of the work which may be included have been shown solely for the convenience of the Owner, Engineer, and Contractor, and do not necessarily include all of the items of work specified in the Contract Documents and required under this Contract.

PI-3.02. Payment

Payment for the work of lump sum items will be made at the lump sum prices stated in the Bid and in accordance with the approved lump sum bid price breakdowns.

PI-3.03. No Payment

No payment will be made under this section for work performed by the Contractor to replace defective work, for rework, or for work not specified in the Contract Documents or ordered by the Engineer. No payment will be made under this Section for work related to the work of this section which is specifically included under other payment item sections.

PAYMENT ITEMS

SECTION 3 - LUMP SUM ITEMS

Page Left Intentionally Blank

PAYMENT ITEMS

SECTION 3 - LUMP SUM ITEMS

Item 3.1 – Miscellaneous Work

PI-3.1-01. Description

Under this Item, the Contractor shall provide all labor, materials, and equipment required for miscellaneous work not included specifically in other Payment Items in accordance with the Contract Documents and as required to complete the work of the Contract.

PI-3.1-02. Work Included

Work under this Item shall generally be comprised of Miscellaneous Work, complete, including, but not limited to the following:

- Provide and maintain noise meter, seismographs, electronic water level indicator and other equipment required by the Contract Documents.
- Integrated Pest Management (IPM) program.
- All necessary permits, including all fees and all labor, materials and equipment required to comply with permits.
- All labor, materials and equipment required to comply with the project Stormwater Pollution Prevention Plan (SWPPP).
- Removal and storage of surface features to be restored and reinstalled upon completion of the work.
- Protection in place of all existing utilities, structures, facilities and vegetation not specified in the Contract Documents to be removed.
- Shop drawings and submittals.
- Clearing, grubbing and debris removal at site to allow completion of the work (including clearing, grubbing and debris removal in accordance with Special Project Condition P-040).
- Erosion and sediment control including the installation, maintenance, and removal of control measures including, but not limited to, stabilized construction entrance(s), dust control, silt fences, straw mulch, erosion control blankets, inlet protection devices, sedimentation traps, and temporary earthen dikes and swales in accordance with the Contract Documents.
- Attendance at all project meetings by the Contractor's project manager and superintendent or pre-authorized replacement(s).
- Attendance at up to three evening neighborhood meetings by the Contractor's project manager and superintendent or pre-authorized replacement(s)

PAYMENT ITEMS

SECTION 3 - LUMP SUM ITEMS

- Project schedule and updates.
- Survey and stakeout of proposed structures and facilities, including field verification of existing features as required in the Contract Documents.
- Record drawings, record measurement survey, and submittal of as-built record drawings.
- Abandonment and/or removal and disposal of existing utilities (including CSO outfalls).
- Plugging or bulkheading existing openings in manhole walls or pipelines to be abandoned with brick and mortar.
- Abandonment and/or removal and disposal of existing catch basins and manholes.
- Saw cutting of existing asphalt pavement, concrete pavement, concrete pavement foundation, curbs, and concrete and asphalt sidewalks and driveways, including associated dust control measures as required.
- Removal and proper disposal of all existing asphalt pavement, concrete pavement, concrete pavement foundation, curbs and concrete and asphalt sidewalks and driveways as required.
- Transportation and/or stockpiling of all excavated material to be used as common fill or topsoil.
- Removal and disposal of all excavated materials that cannot be used as common fill or topsoil.
- Snow and ice removal at site.
- Trash, litter and debris removal from site.
- Replacement of all pre-existing pavement markings in areas where pavements are replaced with new pavement markings after completion of pavement restoration work.
- Temporary pavements and temporary restoration of backfilled excavations as required for public safety, vehicle traffic and pedestrian traffic.
- Adjustment of existing manhole frames, catch basin frames, valve boxes and other access features within the limits of paving as required to meet final grades.
- Replacement of all trees and shrubbery removed except those indicated on the Contract Drawings to be permanently removed.

PAYMENT ITEMS

SECTION 3 - LUMP SUM ITEMS

- Replacement, restoration or repair of all other non-vegetative landscape features including, but not limited to, mailboxes, lawn ornaments, fencing, and guide rails.

- Miscellaneous work shown or specified in the Contract Documents not included in other Payment Items.

PI-3.1-03. Work Not Included

The following items of work closely related to Miscellaneous Work are specifically not included under this Item:

- Mobilization/Demobilization

- Miscellaneous Excavation

- Relocation of Existing Utilities by Utility Owners Allowance

- Temporary Parking Area at 807-809 South Avenue

PI-3.1-04. Basis of Payment

Payment for Miscellaneous Work will be made at the lump sum price stated in the Bid, with partial progress payments made in accordance with the approved lump sum bid price breakdown.

PAYMENT ITEMS

SECTION 3 - LUMP SUM ITEMS

Page Left Intentionally Blank

PAYMENT ITEMS

SECTION 3 - LUMP SUM ITEMS

Item 3.2 – Maintenance and Protection of Traffic

PI-3.2-01. Description

Under this Item, the Contractor shall provide all labor, materials, and equipment required for maintenance and protection of traffic, in accordance with the Contract Documents and as required to complete the work of the Contract.

PI-3.2-02. Work Included

Work under this Item shall generally be comprised of all labor, materials, and equipment required for Maintenance and Protection of Traffic, complete, including, but not limited to the following:

- Maintenance and Protection of Traffic as per the Contract Documents, National Manual of Uniform Traffic Control Devices (NMUTCD), and the City of Syracuse requirements, as required to complete Contract work, including costs to furnish, install, maintain, relocate and remove upon completion of work in affected work zone temporary barriers, barricades, cones, safety lighting, signage, sign supports, sign coverings, flagmen, and appurtenances as required.

- Maintaining vehicular access to private properties.

- Maintenance and protection of pedestrian traffic walkways as per the Contract Documents, NMUTCD, and the City of Syracuse requirements.

- Coordination with the City of Syracuse and local emergency departments regarding both full and partial street closures.

PI-3.2-03. Work Not Included

The following items of work closely related to the Maintenance and Protection of Traffic are specifically not included under this Item:

- Temporary Parking Area at 807-809 South Avenue

PI-3.2-04. Basis of Payment

Payment for Maintenance and Protection of Traffic will be at the lump sum price stated in the Bid, with partial progress payments made in accordance with the approved lump sum bid price breakdown.

PAYMENT ITEMS

SECTION 3 - LUMP SUM ITEMS

Page Left Intentionally Blank

PAYMENT ITEMS

SECTION 3 - LUMP SUM ITEMS

Item 3.3 – Bioretention Basin

PI-.3.3-01. Description

Under this Item, the Contractor shall provide all labor, materials, and equipment required to furnish and install the bioretention basin in accordance with the Contract Documents.

PI-3.3-02. Work Included

Work under this Item shall generally be comprised of all labor, materials and equipment required for Bioretention Basin, complete, including, but not be limited to, the following:

- Excavation to the width and depth limits as defined on the Contract Drawings.
- Protection and preparation of subgrade soils.
- Foundations, including geotextile stabilization fabrics and compacted select fill materials.
- Furnishing and installing all perforated under drain pipe in accordance with the Contract Documents, including, but not limited to, pipe, fittings, couplings, accessories, connections, specials and appurtenances.
- Geotextile filter fabric.
- Backfill and compaction within the width and depth limits as defined on the Contract Drawings.
- Application of seeding as indicated in the Contract Documents.
- Watering and maintenance of areas to be seeded as may be necessary to establish grasses.

PI-3.3-03. Related Work Not Included

The following items of work closely related Bioretention Basin are specifically not included under this Item:

- Excavation Below Subgrade
- Miscellaneous Excavation
- Maintenance of Sewer Flows
- Maintenance and Protection of Traffic
- Temporary Excavation Support System

PAYMENT ITEMS

SECTION 3 - LUMP SUM ITEMS

- Dewatering
- Catch Basins
- Concrete Foundation for Street Pavement
- Bituminous Asphalt Pavements
- Granite Curbing
- Replacement of City of Syracuse Survey Monuments
- Bioretention Swales
- Restoration of Non-Paved Surfaces

PI-3.3-04. Basis of Payment

Payment for Bioretention Basin will be made at the lump sum price stated in the Bid, with partial progress payments made in accordance with the approved lump sum bid price breakdown.

PAYMENT ITEMS

SECTION 3 - LUMP SUM ITEMS

Item 3.4 – Maintenance of Sewer Flows

PI-3.4-01. Description

Under this Item, the Contractor shall provide all labor, materials, and equipment required to provide a bypass system to maintain sewer flows in accordance with the Contract Documents and as required to complete the work of the Contract.

PI-3.4-02. Work Included

Work under this Item shall generally be comprised of all labor, materials, and equipment required for Maintenance of Sewer Flows, complete, including, but not limited to the following:

- Rental or purchase, installation, maintenance and removal of pumps, temporary piping, valves, fittings, plugs, controls, alarms, spare parts, standby pumps, noise suppression equipment, thrust restraint, and other necessary equipment and materials.
- Fuel and electricity required to operate the bypass systems.
- Pump operation, start-up, and maintenance.
- Providing a full-time bypass system operator during entire duration of the bypass system who is sufficiently trained and empowered to make all modifications and repairs as necessary.
- Protection of bypass systems from damage, including temporary vehicle ramps over piping where necessary, and other materials and equipment required to safely maintain and operate temporary bypass systems in a manner that is protective of pedestrians and vehicle traffic.
- Electrical power hook-ups, services, and operation and maintenance.
- All labor, materials and equipment required for installation, maintenance and removal of bypass systems (including any temporary removals, demobilization, and remobilization of pumping systems necessitated by extreme weather or flow conditions), special fabrications, embankments, berms, and modifications and repairs of manholes.

PI-3.4-03. Related Work Not Included

The following items of work closely related to the Maintenance of Sewer Flows are specifically not included under this Item:

- Maintenance and Protection of Traffic

PAYMENT ITEMS

SECTION 3 - LUMP SUM ITEMS

PI-3.4-04. Basis of Payment

Payment for Maintenance of Sewer Flows will be made at the lump sum price stated in the Bid, with partial progress payments made in accordance with the approved lump sum bid price breakdown.

PAYMENT ITEMS

SECTION 3 - LUMP SUM ITEMS

Item 3.5 – Site Security

PI-3.5-01. Description

Under this Item, the Contractor shall provide all labor, materials, and equipment required for site security, in accordance with the Contract Documents and as required to complete the work of the Contract.

PI-3.5-02. Work Included

Work under this Item shall generally be comprised of all labor, materials and equipment required for Site Security, complete, including, but not limited to the following:

- Furnish, install, maintain, relocate and remove temporary security fencing, all gates with locks and keys, temporary construction barriers, lights, signs and other devices as necessary to warn the public of hazards and secure the site from accidental or unauthorized entry.

PI-3.5-03. Related Work Not Included

The following items of work closely related to Site Security are specifically not included under this Item:

- Mobilization/Demobilization
- Miscellaneous Work

PI-3.5-04. Basis of Payment

Payment for Site Security will be made at the lump sum price stated in the Bid, with partial progress payments made in accordance with the approved lump sum bid price breakdown.

PAYMENT ITEMS

SECTION 3 - LUMP SUM ITEMS

Page Left Intentionally Blank

PAYMENT ITEMS

SECTION 3 - LUMP SUM ITEMS

Item 3.6 – Temporary Parking Area at 807-809 South Avenue

PI-3.6-01. Description

Under this Item, the Contractor shall coordinate with and provide direct payment to the owner of the property located at 807-809 South Avenue, Syracuse, New York (shown on Contract Drawing G-4) and shall provide all labor, materials, and equipment required to provide and maintain a temporary parking area at 807-809 South Avenue (including a temporary walkway from the temporary parking area to 615-617 West Castle Street) and at the completion of the project work restore the disturbed areas in accordance with the Contract Documents as ordered by the Engineer.

PI-3.6-02. Work Included

The work for this Payment Item will generally include, but is not limited to, the following items of work associated with providing and maintaining a temporary parking area at 807-809 South Avenue:

- Leasing of the property required for the temporary parking area and temporary walkway from the owner of 807-809 South Avenue (who is also the owner of 615-617 West Castle Street), including compliance with the terms of the lease agreement and providing monthly lease payments directly to the owner of 807-809 South Avenue in accordance with Special Project Conditions Section P-044.
- Coordination with owners of 807-809 South Avenue and 615-617 West Castle Street.
- Clearing and grading of parking and sidewalk areas to allow for completion of work.
- Removal, storage and reinstallation of existing wood fence sections at 807-809 South Avenue as required for installation of temporary parking area and temporary walkway.
- Furnish, install, and maintain (including snow and ice removal) temporary parking area and temporary walkway.
- Furnish, install, and maintain safety lighting.
- Removal or relocation (as appropriate) of any utilities or features not specified to be removed or relocated in the Contract Documents but required to allow for completion of work.
- Additional maintenance and protection of traffic to allow for completion of work.
- Additional erosion and sediment control to allow for completion of work.
- Removal and disposal of temporary parking area and temporary walkway materials.

PAYMENT ITEMS

SECTION 3 - LUMP SUM ITEMS

- Restoration of areas disturbed as a result of installation, maintenance and removal of temporary parking area and temporary walkway including, but not limited to, fine grading of site, installation of topsoil, and seeding.

- Additional insurance requirements to include the owner of 807-809 South Avenue as an additional insured for all insurance provisions of the Contract Documents.

PI-3.6-03. Related Work Not Included

The following items of work closely related to the work of Temporary Parking Area at 807-809 South Avenue are specifically not included under this Item:

- All other Payment Items.

PI-3.6-04. Basis of Payment

Payment for this Temporary Parking Area at 807-809 South Avenue (including monthly lease payments direct to the owner of 807-809 South Avenue) will be made at the lump sum price stated in the Bid, with partial progress payments made in accordance with the approved lump sum price breakdown. The Contractor shall be responsible for payment to the owner of 807-809 South Avenue in accordance with the terms of the lease agreement between the Contractor and the owner of 807-809 South Avenue. The Contractor shall provide monthly lease receipts to the Engineer as proof of payment.

PAYMENT ITEMS

SECTION 3 - LUMP SUM ITEMS

Item 3.7 – Clean Existing 144-inch Diameter Pipe

PI-3.7-01. Description

Under this Item, the Contractor shall provide all labor, materials, and equipment required to remove all material and debris within the existing 144-inch Diameter Midland Avenue CSO Transmission Pipeline from Station 0+00 to 12+00.

PI-3.7-02. Work Included

Work under this Item shall include, but not be limited to, the following:

- Removal and proper disposal of all material and debris within the existing 144-inch diameter pipe in accordance with the Contract Documents to the limits shown on the Contract Drawings or as ordered by the Engineer.
- Televised inspection of existing 144-inch diameter pipe before and after cleaning.

PI-3.7-03. Related Work Not Included

The following items of work closely related to Clean Existing 144-inch Diameter Pipe are specifically not included under this Item:

- Miscellaneous Work
- Modifications to Existing Facilities

PI-3.7-04. Basis of Payment

Payment for Clean Existing 144-inch Diameter Pipe will be made at the lump sum price stated in the Bid, with partial progress payments made in accordance with the approved lump sum price breakdown.

PAYMENT ITEMS

SECTION 3 - LUMP SUM ITEMS

Page Left Intentionally Blank

PAYMENT ITEMS

SECTION 3 - LUMP SUM ITEMS

Item 3.8 – Modifications to Existing CSO 044

PI-3.8-01. Description

Under this Item, the Contractor shall provide all labor, materials, and equipment required for the modifications to existing CSO 044 (location as shown on Contract Drawing G-003) including the new South Avenue Regulator Structure and all piping and structures associated with CSO 044 as described in the Contract Documents and as required to complete the work of this Contract.

PI-3.8-02. Work Included

Work under this Item shall generally be comprised of all labor, materials and equipment required for Modifications to Existing CSO 044, complete, including, but not limited to the following:

- Excavation outside of the width and depth limits for the new 96-inch-diameter CSO 044 Conveyance as defined on the Contract Drawings.
- Protection and preparation of subgrade soils.
- Structural foundations including geotextile fabrics and compacted select fill materials (including NYSDOT 304.12 Type 2).
- Pipe foundations including geotextile fabrics and compacted select fill materials.
- Cast-in-place steel reinforced concrete South Avenue Regulator Structure, complete, including base slabs/footings, exterior walls, interior walls, bench walls, concrete fill, flow channels, adjustable aluminum stop log dams, aluminum stop logs, precast risers, and top slabs.
- Precast concrete manholes MH-S1 and MH-S2, complete, including base slabs/footings, riser sections, bench walls, concrete fill, flow channels, manhole steps, and top slabs.
- Waterproofing below grade concrete surfaces.
- Brickwork and/or concrete as required for setting manhole covers to final finished grades within allowable tolerances.
- Cast frames, covers, and appurtenances.
- Watertight connections to all piping and structures including, but not limited to, the South Avenue Regulator Structure, the 96-inch diameter CSO 044 Conveyance, 12-inch-diameter combined sewers, 44-inch diameter combined sewer, the 48-inch-diameter Overflow to the 96-inch diameter CSO 044 Conveyance, the 48-inch-diameter Overflow to Onondaga Creek, manholes MH-S1 and MH-S2, CSO 044 Outfall, and existing wall adjacent to CSO 044 Outfall.

PAYMENT ITEMS

SECTION 3 - LUMP SUM ITEMS

- All vent piping, vent connections, and associated appurtenances and termination structures.
- 48-inch-diameter Overflow to the 96-inch diameter CSO 044 Conveyance.
- 48-inch-diameter Overflow to Onondaga Creek.
- 12-inch-diameter combined sewer (from South Avenue Regulator Structure to existing 12-inch-diameter combined sewer) and connection.
- Replacement of CSO 044 outfall, including new 42" flap valve.
- Backfill and compaction of excavation outside of the width and depth limits for the new 96-inch diameter CSO 044 Conveyance as defined on the Contract Drawings.
- Testing of completed structures and piping in accordance with the Contract Documents.

PI-3.8-03. Related Work Not Included

The following items of work closely related to Modifications to Existing CSO 044 are specifically not included under this Item:

- Maintenance of Sewer Flows
- Maintenance and Protection of Traffic
- Miscellaneous Excavation
- Temporary Excavation Support System
- Dewatering
- HDPE, FRP or PCCP Sewer Pipe – 96-Inch-Diameter
- Select Fill Materials – NYSDOT 304.12 Type 2 (as used for pavement subbase material)
- Concrete Foundation for Street Pavement
- Bituminous Asphalt Pavements
- Equipment and Electrical Service and Controls

PI-3.8-04. Basis of Payment

Payment for Modifications to Existing CSO 044 shall be made at the lump sum price stated in the Bid, with partial progress payments made in accordance with the approved lump sum bid price breakdowns.

PAYMENT ITEMS

SECTION 3 - LUMP SUM ITEMS

Item 3.9 – Temporary Excavation Support System

PI-3.9-01. Description

Under this Item, the Contractor shall provide all labor, materials, and equipment required to provide temporary support of all excavations, complete in accordance with the Contract Documents and as required to complete the work of the Contract.

PI-3.9-01. Work Included

Work under this Item shall generally be comprised of all labor, materials and equipment required for the specified Temporary Excavation Support System, complete, including, but not limited to the following:

- Excavation outside of the specified trench limits for other Payment Items as required for the installation of temporary excavation support system.
- Connection to existing temporary excavation support system at existing Vacuum Flushing Chamber VFC-2, at the Contractor's discretion.
- Support and protection of all utilities crossing the temporary excavation support system, including cutting of temporary excavation support system, additional structural support of temporary excavation support system, steel casing pipes, pipe insulation, polyethylene, casing spacers, mechanical seal assemblies, pressure treated wood blocks, stainless steel straps, steel beams and other materials as specified in the Contract Documents.
- Furnish and install temporary excavation support system including, but not limited to wales, struts, bracing and other intermediate supports as required.
- Maintain temporary excavation support system.
- Furnish and install bond breaker in accordance with the Contract Documents, where temporary excavation support system is removed.
- Removal of temporary excavation support system where permitted in accordance with the Contract Documents.

PI-3.9-03. Work Not Included

The following items of work closely related to Temporary Excavation Support System are specifically not included under this Item:

- Dewatering
- Maintenance and Protection of Traffic
- Temporary Excavation Support Materials Left In Place as Ordered by the Engineer

PAYMENT ITEMS

SECTION 3 - LUMP SUM ITEMS

PI-3.9-04. Basis of Payment

Payment for Temporary Excavation Support System shall be made at the lump sum price stated in the Bid, with partial progress payments made in accordance with the approved lump sum bid price breakdown.

PAYMENT ITEMS

SECTION 3 - LUMP SUM ITEMS

Item 3.10 – Dewatering

PI-3.10-01. Description

Under this Item, the Contractor shall provide all labor, materials, and equipment required to furnish, maintain, operate and remove temporary groundwater control system as required to control groundwater levels in accordance with the Contract Documents and as required to complete the work of the Contract.

PI-3.10-01. Work Included

Work under this Item shall generally be comprised of all labor, materials and equipment required for Dewatering, complete, including, but not limited to the following:

- Additional subsurface investigations, installation of test wells, and performance well testing.
- Installation of new sumps, wells and piezometers and use of existing sumps, wells and piezometers, as practical.
- Rental or purchase, installation, maintenance and removal of pumps, temporary piping, valves, fittings, plugs, controls, alarms, spare parts, standby pumps, noise suppression equipment and other necessary equipment and materials, including those necessary to have on site available for connection of groundwater dewatering wells to sewers within the Owner's collection system.
- Fuel and electricity required to operate the dewatering pump system.
- Pump operation, start-up and maintenance.
- Providing dewatering personnel during entire dewatering duration who are sufficiently trained and empowered to make all modifications and repairs as necessary.
- Electrical power hook-ups, services, and operation and maintenance.
- All labor, materials and equipment required for installation, maintenance and removal of dewatering system (including any temporary removals, demobilization, and mobilization of dewatering setups necessitated by extreme weather or flow conditions), and special fabrications.
- Steel plates, temporary vehicle ramps, and other materials and equipment required to safely maintain and operate dewatering systems in a manner that is protective of the dewatering system, pedestrians and vehicle traffic.

PAYMENT ITEMS

SECTION 3 - LUMP SUM ITEMS

- All labor, materials and equipment required to monitor flow rates, chloride concentrations, and total suspended solids concentration of groundwater dewatering discharges as specified in the Contract Documents.

- Tremmie grouting of wells and piezometers.

- Development and distribution of groundwater dewatering records, and laboratory analyses as specified in the Contract Documents.

PI-3.10-03. Work Not Included

The following items of work closely related to Dewatering are specifically not included under this Item:

- Geotechnical Instrumentation

- Temporary Excavation Support System

- Mitigation Measures for Groundwater Dewatering

PI-3.10-04. Basis of Payment

Payment for Dewatering shall be made at the lump sum price stated in the Bid, with partial progress payments made in accordance with the approved lump sum bid price breakdown.

PAYMENT ITEMS

SECTION 3 - LUMP SUM ITEMS

Item 3.11 – Connection to Existing Vacuum Flushing Chamber VFC-2

PI-3.11-01. Description

Under this Item, the Contractor shall provide all labor, materials, and equipment required to protect in place existing Vacuum Flushing Chamber (VFC) VFC-2 and connect new 96-inch-diameter CSO 044 Conveyance pipeline to VFC-2, in accordance with the Contract Documents and as required to complete the work of the Contract.

PI-3.11-02. Work Included

Work under this Item shall generally be comprised of all labor, materials and equipment required for the Connection to Existing Vacuum Flushing Chamber VFC-2, complete, including, but not limited to the following:

- Protection of existing VFC-2 structure and equipment.
- Excavation outside of the width and depth limits for the new 96-inch-diameter CSO 044 Conveyance and Conveyance Flushing Chamber FC-A as defined on the Contract Drawings.
- Remove existing temporary excavation support system as required to connect to existing VFC-2.
- Protection and preparation of subgrade soils.
- Remove existing 144-inch-diameter plug and connect to existing PCCP wall piece in existing VFC-2.
- Select demolition at existing VFC-2 structure as shown on the Contract Drawings.
- Backfill and compaction of excavation outside of the width and depth limits for the new 96-inch-diameter CSO 044 Conveyance and Conveyance Flushing Chamber FC-A as defined on the Contract Drawings.

PI-3.11-03. Related Work Not Included

The following items of work closely related to Connection to Existing Vacuum Flushing Chamber VFC-2 are specifically not included under this Item:

- Temporary Excavation Support System
- Dewatering
- Restoration of Non-Paved Surfaces
- Conveyance Flushing Chambers

PAYMENT ITEMS

SECTION 3 - LUMP SUM ITEMS

- HDPE, FRP or PCCP Sewer Pipe – 96-Inch-Diameter
- Modifications to Existing Facilities – VFC-2 Area

PI-3.11-04. Basis of Payment

Payment for Connection to Existing Vacuum Flushing Chamber VFC-2 will be made at the lump sum price stated in the Bid, with partial progress payments made in accordance with the approved lump sum bid price breakdown, upon completion of the work included in this item.

PAYMENT ITEMS

SECTION 3 - LUMP SUM ITEMS

Item 3.12 – Conveyance Flushing Chambers

Item 3.12a – FC-A
Item 3.12b – FC-B

PI-3.12-01. Description

Under this Item, the Contractor shall provide all labor, materials, and equipment required for the construction of conveyance flushing chamber (FC) structures FC-A and FC-B in accordance with the Contract Documents and as required to complete the work of the Contract.

PI-3.12-02. Work Included

Work under this Item shall generally be comprised of all labor, materials and equipment required for the installation of Conveyance Flushing Chambers, complete, including, but not limited to the following:

- Excavation outside of the width and depth limits for new HDPE, FRP or PCCP sewer pipe as defined on the Contract Drawings as required for the installation of all structures.
- Protection and preparation of subgrade soils.
- Structure foundations, including geotextile fabrics and compacted select fill foundation materials (including NYSDOT 304.12 Type 2).
- Cast-in-place steel reinforced concrete FC structure, complete, including base slab/footings, exterior walls, interior walls, benchwalls, training walls, concrete fill, flow channels, precast risers, and top slabs.
- Waterproofing of below grade concrete surfaces, as required.
- Aluminum ladder with fall protection.
- All watertight piping connections and penetrations, including CSO 044 Conveyance, vent pipes, fill pipes and drain pipes.
- Knife gate valve.
- Piping and fittings including galvanized steel vent pipe and associated termination structure, and HDPE/DIP fill straw.
- Brickwork and/or concrete as required for setting manhole covers to final finished grades within allowable tolerances.

PAYMENT ITEMS

SECTION 3 - LUMP SUM ITEMS

- Cast frames, covers, hatches and appurtenances.
- Backfill and compaction of excavation for FC structure outside of the width and depth limits for new HDPE, FRP or PCCP sewer pipe as defined on the Contract Drawings.
- Coordination with Owner's independent testing laboratories, as required.
- Leakage testing of structure in accordance with the Contract Documents.
- Performance testing of completed FC system in accordance with the Contract Documents.

PI-3.12-03. Related Work Not Included

The following items of work closely related to the installation of Conveyance Flushing Chambers are specifically not included under this Item:

- Temporary Excavation Support System
- Dewatering
- Restoration of Non-Paved Areas
- Select Fill Materials – NYSDOT 304.12 Type 2 (as used for pavement subbase material)
- Concrete Foundation for Street Pavement
- Bituminous Asphalt Pavements
- Equipment and Electrical Service and Controls

PI-3.12-04. Basis of Payment

Payment for each Conveyance Flushing Chamber will be made at the respective lump sum prices stated in the Bid, with partial progress payments made in accordance with the approved lump sum bid price breakdowns.

PAYMENT ITEMS

SECTION 3 - LUMP SUM ITEMS

Item 3.13 – Manhole MH-1

PI-3.13-01. Description

Under this Item, the Contractor shall provide all labor, materials, and equipment required for the construction of manhole MH-1, at 96-inch diameter CSO 044 Conveyance Station 14+50 in accordance with the Contract Documents and as required to complete the work of this Contract.

PI-3.13-02. Work Included

Work under this Item shall generally be comprised of all labor, materials and equipment required for the installation of Manhole MH-1, complete, including, but not limited to the following:

- Excavation to the width, depth and length limits indicated on the Contract Drawings as required for the installation of all structures, piping, fittings, manways, and accessories.
- Protection and preparation of subgrade soils.
- Structural and pipe foundations, including geotextile fabrics, controlled low strength material, and compacted select fill materials (including NYSDOT 304.12 Type 2).
- Furnishing and installing 96-inch diameter pipe, fittings and appurtenances within the limits of Manhole MH-1, including 96-inch diameter pipe fabricated with 48-inch-diameter manway.
- Furnishing and installing 48-inch diameter manway and all appurtenances including fiberglass ladder, ladder supports, and fall protection.
- All watertight piping connections.
- Waterproofing below grade surfaces.
- Brickwork and/or concrete as required for setting manhole covers to final finished grades within allowable tolerances.
- Reinforced concrete top slab, cast frame, cover, and appurtenances.
- Backfill and compaction of excavation for manhole MH-1.
- Testing of completed structures and piping in accordance with the Contract Documents.

PAYMENT ITEMS

SECTION 3 - LUMP SUM ITEMS

PI-3.13-03. Related Work Not Included

The following items of work closely related to Manhole MH-1 are specifically not included under this Item:

- Maintenance and Protection of Traffic
- Temporary Excavation Support System
- Dewatering
- Restoration of Non-Paved Areas
- Select Fill Materials – NYSDOT 304.12 Type 2 (as used for pavement subbase material)
- Concrete Foundation for Street Pavement
- Bituminous Asphalt Pavements

PI-3.13-04. Basis of Payment

Payment for Manhole MH-1 will be made at the lump sum price stated in the Bid, with partial progress payments made in accordance with the approved lump sum bid price breakdowns.

PAYMENT ITEMS

SECTION 3 - LUMP SUM ITEMS

Item 3.14 – Relocate Existing Water Mains – C-1 and C-2 to C-3

PI-3.14-01. Description

Under this Item, the Contractor shall provide all labor, materials, and equipment required for removing, abandoning, and replacing existing water mains, in accordance with the Contract Documents and as required to complete the work of the Contract.

PI-3.14-02. Work Included

Work under this Item shall generally be comprised of all labor, materials and equipment required to Relocate Existing Water Mains, complete, including, but not limited to the following:

- Coordination with the City of Syracuse Department of Water, and the Onondaga County Department of Health.
- Excavation outside of the width and depth limits for new sewer pipe as defined on the Contract Drawings.
- Protection and preparation of subgrade soils.
- Furnishing and installing all water main pipe in accordance with the Contract Documents, including, but not limited to, pipe, polyethylene film, fittings, caps and plugs, transition couplings, accessories, specials, hydrants, valves, tapping sleeves and valve assemblies, and valve boxes for each valve or valve assembly.
- Connections to existing water mains.
- Remove existing valves, hydrant assemblies and other appurtenances to be abandoned and provide the City of Syracuse as shown or specified in the Contract Documents.
- Remove existing hydrants from water main to be abandoned, relocate, reinstall, and reconnect hydrants to new water main as shown or specified in the Contract Documents.
- Furnishing and installing all labor, materials and equipment necessary to provide thrust restraint, including, but not limited to, restrained joints, placing concrete for thrust blocks, and steel reinforcing.
- Backfill and compaction outside of the width and depth limits for new sewer pipe as defined on the Contract Drawings.
- Flushing, pressure testing and disinfection of all installed water main in accordance with the Contract Documents, including all water, sampling, chlorine, laboratory analysis, and completion and distribution of required testing documentation.

PAYMENT ITEMS

SECTION 3 - LUMP SUM ITEMS

PI-3.14-03. Related Work Not Included

The following items of work closely related to Relocate Existing Water Mains specifically not included under this Item:

- Restoration of Non-Paved Areas
- Select Fill Materials – NYSDOT 304.12 Type 2 (as used for pavement subbase material)
- Concrete Foundation for Street Pavement
- Bituminous Asphalt Pavements
- Temporary Excavation Support System
- Dewatering

PI-3.14-04. Basis of Payment

Payment for each Water Main Relocation will be made at the respective lump sum prices stated in the Bid, with partial progress payments made in accordance with the approved lump sum bid price breakdowns.

PAYMENT ITEMS

SECTION 3 - LUMP SUM ITEMS

Item 3.15 – Modifications to Existing Facilities
Item 3.15a – VFC-1 Area
Item 3.15b – VFC-2 Area
Item 3.15c – Vent at Midland Avenue/West Castle Street

PI-3.15-01. Description

Under this Item, the Contractor shall provide all labor, materials, and equipment required to provide the Modifications to the Existing Facilities in accordance with the Contract Documents and as ordered by the Engineer.

PI-3.15-02. Work Included

Work under this Item shall generally be comprised of all labor, materials and equipment required for Modifications to the Existing Facilities at VFC-1 Area, VFC-2 Area, and Vent at Midland Avenue/West Castle Street, complete, including, but not limited to the following:

- Remove existing chain link fence fabric, gates and posts as required for completion of work.
- Abandon existing chain link fence post holes.
- Remove and dispose of existing fence material not to be reinstalled.
- Excavation as required to install new fence and gate posts.
- Furnish and install new fence and gate posts, braces, latches, and all required fasteners and appurtenances to connect the existing chain link fence to new fence and gate posts as specified in the Contract Documents.
- Concrete for installation of new fence and gate posts.
- Prepare and paint existing and new fence and gate posts.
- Furnish and install new fence fabric.
- Protection and preparation of subgrade soils.
- Backfill and compaction of excavation.
- Remove and dispose of existing galvanized steel vent piping, and associated excavation and backfill.
- Furnish and install new termination structure and associated excavation and backfill.
- Excavation as required for installation of concrete equipment pad.

PAYMENT ITEMS

SECTION 3 - LUMP SUM ITEMS

- Protection and preparation of subgrade soils.
- Structural foundations, including geotextile fabrics and compacted select fill.
- Furnishing and installing reinforced concrete equipment pad, including drilling, doweling and any appurtenances.
- Backfill and compaction of existing excavation.
- Coordination with Owner's independent testing laboratory, as required.
- Retrofitting existing facilities with fall protection devices.

PI-3.15-03. Related Work Not Included

The following items of work closely related to the work of Modifications to the Existing Facilities are specifically not included under this Item:

- Equipment and Electrical Service and Controls – FC-A, FC-B and South Avenue Regulator Structure.
- Connection to Existing Catch Basins.

PI-3.15-04. Basis of Payment

Payment for Modifications to the Existing Facilities will be made at the respective lump sum prices stated in the Bid, with partial progress payments made in accordance with the approved lump sum bid price breakdowns.

PAYMENT ITEMS

SECTION 3 - LUMP SUM ITEMS

Item 3.16 – Plantings

Item 3.16a – West Castle Street Area
Item 3.16b – Onondaga Creek Area

PI-3.16-01. Description

Under this Item, the Contractor shall provide all labor, materials and equipment required to place and establish all plantings as shown on Contract Drawings G-22, LA-1, LA-2, and LA-3 as described herein in accordance with the Contract Documents and as required to complete the work of this Contract.

PI-3.16.-02. Work Included

Work under this Item shall generally be comprised of all labor, materials, and equipment required for Plantings, complete, including, but not limited to, the following:

- Excavation outside of the width and depth limits of the 96-inch-diameter CSO 044 Conveyance as identified on the Contract Drawings.
- Protection and preparation of subgrade soils.
- Placement of plantings as shown on the Contract Drawings including, but not limited to, removal/loosening of burlap, furnishing and providing wrapping paper, removal and proper disposal of planting container, and furnishing and installing hardwood stakes, wire, and reinforced rubber hose.
- Backfill and compaction of excavation outside of the width and depth limits of the 96-inch-diameter CSO 044 Conveyance as identified on the Contract Drawings.
- Furnishing and installing fertilizers, planting soil, and mulch layers.
- Watering and maintenance of areas to be restored as may be necessary to establish plantings.

PI-3.16-03. Related Work Not Included

The following items of work closely related to the work of Plantings are specifically not included under this Item:

- Miscellaneous Work
- Bioretention Basin
- Bioretention Swales

PAYMENT ITEMS

SECTION 3 - LUMP SUM ITEMS

- Sidewalk Restoration
- Restoration of Non-Paved Surfaces
- Modifications of Existing Facilities

PI-3.16.-03 Basis of Payment

Payment for Plantings will be made at the respective lump sum prices stated in the Bid, with partial progress payments made in accordance with the approved lump sum bid price breakdowns.

PAYMENT ITEMS

SECTION 3 - LUMP SUM ITEMS

Item 3.17 – Grouting of Existing Rip Rap

PI-3.17-01. Description

Under this Item, the Contractor shall provide all labor, materials, and equipment required to grout existing rip rap along the northern bank of Onondaga Creek.

PI-3.17-02. Work Included

Work under this Item shall include, but not limited to, the following:

- Replacement or movement of rip rap as required to the limits shown on the Contract Drawings.
- Furnishing and Placing Grout
- Geotextile Stabilization Fabric
- Protection of waterway and creek bed from debris, materials, and work associated with this item.

PI-3.17-03. Related Work Not Included

The following items of work closely related to Grouting of Existing Rip Rap are specifically not included under this Item:

- Miscellaneous Work
- Modifications to Existing Facilities

PI-3.17-04. Basis of Payment

Payment for Grouting of Rip Rap will be made at the lump sum price stated in the Bid, with partial progress payments made in accordance with the approved lump sum price breakdown.

PAYMENT ITEMS

SECTION 3 - LUMP SUM ITEMS

Page Left Intentionally Blank

PAYMENT ITEMS

SECTION 3 - LUMP SUM ITEMS

Item 3.18 – Equipment and Electrical Service and Controls

Item 3.18a – FC-A, FC-B, and South Avenue Regulator Structure
Item 3.18b – RTF SCADA Enclosure

PI-3.18-01. Description

Under this Item, the Contractor shall provide all labor, materials, and equipment required for providing all equipment and associated electrical services, connections, controls and other appurtenances for FC-A, FC-B, South Avenue Regulator Structure, and RTF SCADA Enclosure in accordance with the Contract Documents and as required to complete the work of the Contract.

PI-3.18-02. Work Included

Work under this Item shall generally be comprised of all labor, materials, and equipment required for Equipment and Electrical Service and Controls for FC-A, FC-B, South Avenue Regulator Structure, and RTF SCADA Enclosure, complete, including, but not limited to the following:

- Excavation outside of the specified trench limits for other Payment Items.
- Protection and preparation of subsurface soils.
- Foundations for electrical structures, including geotextile fabrics and compacted select fill materials.
- Electrical manholes and pull boxes, including top slab, frame, cover, conduit connections, mechanical seals, grout, and other appurtenances.
- Conduit and ductbank, including all concrete, steel reinforcement, concrete blocks, and compacted select fill materials.
- All fiber optic cables, connections, and appurtenances.
- Electrical service connections, conductors, grounding wire, grounding rods, antennas, antenna poles, antenna cables, mounting hardware, guide wires and other appurtenances.
- Steel reinforced concrete equipment pads including compacted select fill foundation and connection to existing concrete equipment pads.
- Furnish and install all equipment included in Technical Specifications Division 16 (Electrical) and Division 17 (Instrumentation) as specified in the Contract Documents.
- Furnish and install all equipment specified in Technical Specification Section 11297 of the Contract Documents including, but not limited to equipment enclosure, hydraulic power pack pump and meter, hydraulically actuated valves, pressure relief valves, controls, hydraulic hoses, hydraulic reservoir, hydraulic cylinders, flushing gates, level monitoring system and appurtenances.

PAYMENT ITEMS

SECTION 3 - LUMP SUM ITEMS

- Furnish and install all equipment included on Contract Drawings E-1 and E-2 as required for Equipment and Electrical Service and Controls for FC-A, FC-B, South Avenue Regulator Structure, and RTF SCADA Enclosure
- All testing and startup procedures as indicated in the Contract Documents.
- Backfill and compaction of excavation outside of the specified trench limits for other Payment Items.
- Coordination with Owner for SCADA enclosure at RTF.

PI-3.18-03. Related Work Not Included

The following items of work closely related to Equipment and Electrical Service and Controls are specifically not included under this Item:

- Conveyance Flushing Chambers
- Modifications to CSO 044
- Maintenance and Protection of Traffic
- Concrete Foundation for Street Pavement
- Bituminous Asphalt Pavements
- Modifications to Existing Facilities

PI-3.18-04. Basis of Payment

Payment for Equipment and Electrical Service and Controls will be made at the lump sum prices stated in the Bid, with partial progress payments made in accordance with the approved lump sum bid price breakdowns.

PAYMENT ITEMS

SECTION 4 - UNIT PRICE ITEMS

PI-4.01. Description

Under this section, the Contractor shall provide all labor, materials and equipment, required to perform and fully construct the work of unit price items, in the quantities and to the lines, grades and elevations shown, specified, scheduled, encountered in the work or ordered by the Engineer.

The work of this section also includes all accessories, appurtenances and other work required to complete this Contract, except those related to the work of these items but specifically included under other payment item sections of this Contract.

The schedules of the work which may be included have been shown solely for the convenience of the Owner, Engineer, and Contractor, and do not necessarily include all of the items of work which are shown and specified and which are needed under this Contract.

PI-4.02. Payment

Payment for the work of unit price items will be made at the Contractor's unit prices stated in the Bid for each item included under this section, as measured by the Contractor and verified by the Engineer in accordance with the Basis of Payment for each Payment Item.

PI-4.03. No Payment

No payment will be made under this section for work performed by the Contractor to replace defective work, for rework, for work which is outside of the limits of construction or for work which is not specified in the Contract Documents or ordered by the Engineer. No payment will be made for work related to this section which is specifically included under other payment item sections.

PAYMENT ITEMS

SECTION 4 - UNIT PRICE ITEMS

Page Left Intentionally Blank

PAYMENT ITEMS

SECTION 4 - UNIT PRICE ITEMS

Item 4.1 – Restoration of Non-Paved Surfaces

PI-4.1-01. Description

Under this Item, the Contractor shall provide all labor, materials and equipment required to replace, restore and re-establish all non-paved surfaces on public and private property damaged or disturbed by the work of this Contract in accordance with the Contract Documents.

PI-4.1.-02. Work Included

Work under this Item shall generally be comprised of all labor, materials, and equipment required for Restoration of Non-Paved Surfaces, complete, including, but not limited to, the following:

- Spreading topsoil, seeding, and mulching as required for the repair and re-establishment of all lawns and vegetative ground surfaces to equal or better condition than existing prior to the start of work.
- Watering and maintenance of areas to be restored as may be necessary to establish turf.
- Coordination with property owners.

PI-4.1-03. Related Work Not Included

The following items of work closely related to the work of Restoration of Non-Paved Surfaces are specifically not included under this Item:

- Miscellaneous Work
- Bioretention Basin
- Bioretention Swales
- Plantings
- Sidewalk Restoration
- Granite Curbing
- Concrete Foundation for Street Pavement
- Bituminous Asphalt Pavement

PAYMENT ITEMS

SECTION 4 - UNIT PRICE ITEMS

PI-4.1.-03 Basis of Payment

Payment for Restoration of Non-Paved Surfaces will be made based on the actual field measured area in square yards of surfaces restored in accordance with the Contract Documents or ordered by the Engineer multiplied by the unit price per square yard stated in the Bid. Vegetation shall be established as determined by the Engineer prior to payment for this work.

No payment will be made under this section for vegetation that is not established as determined by the Engineer or for rework as may be necessary to establish vegetation. No payment will be made for Restoration of Non-Paved Surfaces beyond the Limits of Construction shown on the Contract Drawings.

PAYMENT ITEMS

SECTION 4 - UNIT PRICE ITEMS

Item 4.2 – Rock Extrication

PI-4.2-01. Description

Under this Item, the Contractor shall provide all labor, materials and equipment required to extricate, dislodge, break, blast and otherwise sever rock (including naturally occurring cemented sands, gravel and cobbles) which may be encountered within the limits of construction from its position within the excavation so the rock may be excavated as common earth material as ordered by the Engineer.

PI-4.2-02. Work Included

Work under this Item shall generally be comprised of all labor, materials, and equipment required for Rock Extrication, complete, including, but not limited to, the following:

- Extricate material defined as rock in the Contract Documents.
- Controlled blasting including all requirements of Technical Specification Section 02222 of the Contract Documents.
- Completing pre-blast surveys.
- Associated common earth material excavation, backfilling and compaction required for rock extrication and to allow for the construction of temporary excavation support system after rock extrication.
- Additional dewatering, as required.
- Additional temporary excavation support system, as required.
- Maintenance and protection of utilities, structures and features.
- Additional maintenance and protection of traffic, as required.
- Additional shop drawings and submittals, as required.
- Additional attendance at one evening neighborhood meeting by the Contractor's project manager and superintendent or pre-authorized replacement(s).

PI-4.2-03. Related Work Not Included

The following items of work closely related to the work of Rock Extrication are specifically not included under this Item:

- Excavation Below Subgrade
- Miscellaneous Excavation

PAYMENT ITEMS

SECTION 4 - UNIT PRICE ITEMS

- Removal/Disposal of Construction/Demolition Debris Generated During Earthwork
- Temporary Excavation Support System
- Excavation of common earth material as shown, specified, or scheduled in the Contract Documents.

PI-4.2-04. Basis of Payment

Payment for Rock Extrication will be made based on the calculated volume (in cubic yards) of rock extricated, computed by measuring the actual field measured average width, length and depth extricated multiplied by the unit price per cubic yard stated in the Bid.

No payment will be made under this section for rock extrication not ordered by the Engineer.

PAYMENT ITEMS

SECTION 4 - UNIT PRICE ITEMS

Item 4.3 – Controlled Low Strength Material (CLSM)

PI-4.3-01. Description

Under this Item, the Contractor shall furnish all labor, materials, and equipment required to place controlled low strength material (CLSM) in accordance with the Contract Documents.

PI-4.3-02. Work Included

Work under this Item shall generally be comprised of all labor, materials and equipment required for CLSM, complete, including, but not limited to, the following:

- Furnishing and placing CLSM in accordance with the Contract Documents for permanent support of underground utilities, for CLSM cutoff walls, pipe foundations, and encasement of sanitary laterals as stated or shown in the Contract Documents.
- Coordination with Owner's independent testing laboratory, as required.

PI-4.3-03. Related Work Not Included

The following items of work closely related to the work of Controlled Low Strength Material are specifically not included under this item:

- Manhole MH-1
- Restoration of Non-Paved Surfaces
- Temporary Excavation Support System to Remain in Place as ordered by the Engineer.

PI-4.3-04. Basis of Payment

Payment for Controlled Low Strength Material will be made based on the actual field measured volume (in cubic yards) of CLSM furnished and placed within the width, depth and length limits as defined on the Contract Drawings multiplied by the unit price per cubic yard for CLSM stated in the Bid.

PAYMENT ITEMS

SECTION 4 - UNIT PRICE ITEMS

Page Left Intentionally Blank

PAYMENT ITEMS

SECTION 4 - UNIT PRICE ITEMS

Item 4.4 – Select Fill Materials

Item 4.4a – Type F Run-of-Crusher Stone
Item 4.4b – Type R Run-of-Bank Gravel
Item 4.4c – NYSDOT 304.12 Type 2
Item 4.4d – Type 3 Crushed Stone

PI-4.4-01. Description

Under this Item, the Contractor shall provide all labor, materials, and equipment required to furnish, place, and compact the following select fill materials in accordance with the Contract Documents:

Type F Run-of-Crusher Stone
Type R Run-of-Bank Gravel
NYSDOT 304.12 Type 2
Type 3 Crushed Stone

PI-4.4-02. Work Included

Work under this Item shall generally be comprised of all labor, materials and equipment required for Select Fill Materials, complete, including but not limited to, the following:

- Furnishing, installing, and compacting select fill materials in accordance with the Contract Documents for pipe foundations, pipe trench excavation backfill, pavement subbase and other backfill as ordered by the Engineer.
- Furnishing, installing, and compacting NYSDOT 304.12 Type 2 materials as pavement subbase.
- Coordination with Owner's independent testing laboratory, as required.

PI-4.4-03. Related Work Not Included

The following items of work closely related to the work of Select Fill Materials are specifically not included under this item:

- Geotechnical Instrumentation
- Bioretention Basin
- Bioretention Swales
- Plantings
- Restoration of Non-Paved Surfaces

PAYMENT ITEMS

SECTION 4 - UNIT PRICE ITEMS

- Dewatering
- Connection to Existing Vacuum Flushing Chamber VFC-2
- Conveyance Flushing Chambers (excluding NYSDOT 304.12 Type 2 materials as pavement subbase)
- Modifications to Existing CSO 044 (excluding NYSDOT 304.12 Type 2 materials as pavement subbase)
- Relocate Existing Water Mains
- Manhole MH-1(excluding NYSDOT 304.12 Type 2 materials as pavement subbase)
- Stormwater Storage Tanks
- Catch Basins (excluding NYSDOT 304.12 Type 2 materials as pavement subbase)
- Type 2 Precast Concrete Manholes (excluding NYSDOT 304.12 Type 2 materials as pavement subbase)
- Additional Depth of Type 2 Precast Concrete Manholes
- Replacement of City of Syracuse Survey Monuments

PI-4.4-04. Basis of Payment

Payment for Select Fill Materials will be made as follows based on the actual field measured volume (in cubic yards) of select fill materials furnished, placed, and compacted per the Contract Documents, or as ordered by the Engineer, multiplied by the unit price per cubic yard for each Select Fill Material stated in the Bid. Volume of Select Fill Materials shall be calculated as follows:

Pipe Foundations: Select Fill Materials installed as pipe foundations shall be based on the actual in place field measured and calculated volume of material furnished, placed and compacted within the width and depth limits as defined on the Contract Drawings, and the actual field measured trench length, excluding length across manholes and structures (as defined by the distance from outside face to outside face of manhole or structure along centerline of pipe). Calculation of the volume of pipe foundations shall exclude the volume of the pipe based on the volume determined by the outside diameter of the pipe.

Pipe Trench Backfill: Select Fill Materials installed as trench backfill shall be based on the actual in place field measured and calculated volume of material furnished, placed and compacted within the width and depth limits as defined on the Contract Drawings, and the actual field measured trench length, excluding length across manholes and structures (as defined by the distance from outside face to outside face of manhole or structure along centerline of pipe). Calculation of the volume of pipe trench backfill shall exclude the volume of the pipe based on the volume determined by the outside diameter of the pipe.

PAYMENT ITEMS

SECTION 4 - UNIT PRICE ITEMS

Pavement Subbase: Select Fill Materials installed as pavement subbase under repaved areas shall be based on the actual in place field measured and calculated volume of material furnished, placed and compacted in place in accordance with the width, depth and length limits as defined on the Contract Drawings.

Select Fill Materials ordered by the Engineer: Select Fill Materials ordered by the Engineer to be furnished, placed, and compacted for other applications shall be based on the actual in place field measured volume of material furnished, placed and compacted in place.

PI-4.4-05. No Payment

No payment will be made under this section for installed Select Fill Materials placed outside of the specified limits shown on the Contract Drawings, unless ordered as such by the Engineer.

No payment will be made under this section for Select Fill Materials required as result of the Contractor's failure to adequately protect stable, exposed subgrade from damage.

No payment will be made for rework or for areas excavated and backfilled more than once with Select Fill Materials as a result of the Contractor's sequencing, means and methods or negligence.

PAYMENT ITEMS

SECTION 4 - UNIT PRICE ITEMS

Page Left Intentionally Blank

PAYMENT ITEMS

SECTION 4 - UNIT PRICE ITEMS

Item 4.5 – Temporary Excavation Support System Materials Left In Place as Ordered by Engineer

PI-4.5-01. Description

Under this Item, the Contractor shall leave temporary excavation support system materials in place due to unforeseen conditions as determined by the Engineer and as directed by the Engineer. This work shall be completed in accordance with the Contract Documents.

PI-4.5-02. Work Included

Work under this Item shall generally be comprised of all labor, materials and equipment required for Temporary Excavation Support System Materials Left In Place as Ordered by Engineer, complete, including, but not be limited to, the following:

- Salvage value of installed materials including, but not limited to, steel sheeting, wales, struts, soldier beams, and bracing less the cost of removal of installed materials.
- Cutting of the temporary excavation support system to be left in place at the depth indicated in the Contract Documents or as ordered by the Engineer.

PI-4.5-03. Work Not Included

The following items of work closely related to Temporary Excavation Support System Materials Left In Place as Ordered by Engineer are specifically not included under this item:

- Temporary Excavation Support System
- HDPE, FRP or PCCP Sewer Pipe – 96-inch-Diameter

PI-4.5-04. Basis of Payment

Payment for Temporary Excavation Support System Materials Left In Place as Ordered by the Engineer shall be made based on the projected area in square feet of the installed temporary excavation support system as determined by the product of the length of the supported trench parallel to the pipe centerline times the vertical dimension of the installed temporary excavation support system materials which are driven into undisturbed soil for each side of the trench where the Engineer orders the installed temporary excavation support system materials to be left in place multiplied by the unit price per square foot stated in the Bid.

No payment will be made under this Item for cut or trimmed temporary excavation support system materials removed, for collapsed temporary excavation support system materials, or for temporary excavation support system materials ordered left in place by the Engineer as a result of unfavorable conditions caused by poor or negligent construction methods.

PAYMENT ITEMS

SECTION 4 - UNIT PRICE ITEMS

No payment will be made for temporary excavation support system materials left in place at the Contractor's discretion in areas where temporary excavation support systems are permitted to be removed in accordance with the Contract Documents.

PAYMENT ITEMS

SECTION 4 - UNIT PRICE ITEMS

Item 4.6 – Geotextile Stabilization (Woven) Fabric

PI-4.6-01. Description

Under this Item, the Contractor shall provide all labor, materials and equipment required for the installation of geotextile stabilization (woven) fabric for pipe foundations, pavement restorations and road restorations in accordance with the Contract Documents.

PI-4.6-02. Work Included

Work under this Item shall generally be comprised of all labor, materials and equipment required for Geotextile Stabilization (Woven) Fabric, complete, including, but not be limited to, the following:

- Furnishing and placing geotextile fabrics per the manufacturer's recommendations and the Contract Documents.

PI-4.6-03. Related Work Not Included

The following items of work closely related to Geotextile Stabilization (Woven) Fabric are specifically not included under this Item:

- Temporary Excavation Support System
- Dewatering
- Connection to Existing Vacuum Flushing Chamber VFC-2
- Conveyance Flushing Chambers
- Modifications to Existing CSO 044
- Manhole MH-1
- Relocate Existing Water Mains
- Catch Basins
- Precast Type 2 Manholes
- Bioretention Basin
- Bioretention Swales
- Stormwater Storage Tanks

PAYMENT ITEMS

SECTION 4 - UNIT PRICE ITEMS

PI-4.6-04. Basis of Payment

Payment for Geotextile Stabilization (Woven) Fabric will be made based on the actual field measured area (in square yards) of geotextile fabric furnished and placed within the width, depth and length limits as defined on the Contract Drawings (including the area of fabric used for overlapping as required by the manufacturer and specified in the Contract Documents, whichever is greater) multiplied by the unit price per square yard for Geotextile Stabilization (Woven) Fabric stated in the Bid.

PAYMENT ITEMS

SECTION 4 - UNIT PRICE ITEMS

Item 4.7 – Catch Basins
Item 4.7a – Catch Basins – Roadway with Curbs
Item 4.7b – Catch Basins – Non-Paved Area

PI-4.7-01. Description

Under this Item, the Contractor shall provide all labor, materials and equipment required for the installation of catch basin structures in accordance with the Contract Documents.

PI-4.7-02. Work Included

Work under this Item shall generally be comprised of all labor, materials and equipment required for Catch Basins, complete, including, but not be limited to, the following:

- Excavation to the limits as defined on the Contract Drawings as required for the installation of all structures, accessories, and appurtenances.
- Protection and preparation of subgrade soils.
- Structural foundations, including geotextile fabrics and compacted select fill (including NYSDOT 304.12 Type 2).
- Precast concrete catch basin structure, complete, including base slab/footing, riser sections, and top slabs.
- Waterproofing below grade concrete surfaces.
- All watertight piping connections, including storm sewer lateral and 4-inch-diameter curb drain discharge pipe.
- Brickwork and/or concrete as required for setting frame and grate to final finished grades within allowable tolerances.
- Cast frame and grate.
- Catch basin traps.
- Backfill and compaction of excavation for catch basin structure.
- Testing of completed catch basin in accordance with the Contract Documents.

PI-4.7-03. Related Work Not Included

The following items of work closely related to Catch Basins are specifically not included under this Item:

- PVC Sewer Pipe

PAYMENT ITEMS

SECTION 4 - UNIT PRICE ITEMS

- DIP Sewer Pipe
- Select Fill Materials – NYSDOT 304.12 Type 2 (as used for pavement subbase material)
- Granite Curbing
- Concrete Foundation for Street Pavement
- Bituminous Asphalt Pavements
- Modifications to Existing Facilities

PI-4.7-04. Basis of Payment

Payment for Catch Basins will be made based on the actual number of catch basins furnished and installed in accordance with the Contract Documents multiplied by the unit price per each catch basin stated in the Bid.

PAYMENT ITEMS

SECTION 4 - UNIT PRICE ITEMS

Item 4.8 – PVC Sewer Pipe – 12-Inch-Diameter

PI-4.8-01. Description

Under this Item, the Contractor shall provide all labor, materials, and equipment required to furnish and install polyvinyl chloride (PVC) sewer pipe in accordance with the Contract Documents.

PI-4.8-02. Work Included

Work under this Item shall generally be comprised of all labor, materials and equipment required for PVC Sewer Pipe, complete, including, but not be limited to, the following:

- Excavation to the width and depth limits as defined on the Contract Drawings.
- Protection and preparation of subgrade soils.
- Furnishing and installing all PVC sewer pipe in accordance with the Contract Documents, including, but not limited to, pipe, fittings, couplings, accessories, specials and appurtenances.
- All watertight connections to existing and new sewers in accordance with the Contract Documents.
- Backfill and compaction within the width and depth limits as defined on the Contract Drawings.
- Testing of installed sewer pipe in accordance with the Contract Documents.

PI-4.8-03. Related Work Not Included

The following items of work closely related PVC Sewer Pipe are specifically not included under this Item:

- Excavation Below Subgrade
- Miscellaneous Excavation
- Maintenance of Sewer Flows
- Maintenance and Protection of Traffic
- Temporary Excavation Support System
- Dewatering
- Modifications to Existing CSO 044

PAYMENT ITEMS

SECTION 4 - UNIT PRICE ITEMS

- Rock Extrication
- Controlled Low Strength Material
- Select Fill Materials
- Geotextile Stabilization Fabric
- Catch Basins
- Connections to Existing Catch Basins
- Precast Type 2 Manholes
- Concrete Foundation for Street Pavement
- Bituminous Asphalt Pavements
- Granite Curbing
- Replacement of City of Syracuse Survey Monuments
- Replacement of Sewer Vents and Cleanouts
- Bioretention Basin
- Bioretention Swales

PI-4.8-04. Basis of Payment

Payment for PVC Sewer Pipe will be made based on the actual field measured length of pipe installed as measured along the centerline of the pipe in linear feet multiplied by the unit price per linear foot for each size as stated in the Bid. Measurement of linear footage shall commence and/or end at the outside face of manholes/structures and/or the point of connection to other sewer pipes. Measurement of linear footage across fittings (including horizontal and vertical bends, etc.) shall be included in the measured linear footage for payment. No payment shall be made for linear footage measured across the interior of manholes/structures.

PAYMENT ITEMS

SECTION 4 - UNIT PRICE ITEMS

Item 4.9 – HDPE, FRP or PCCP Sewer Pipe – 96-Inch-Diameter

PI-4.9-01. Description

Under this Item, the Contractor shall provide all labor, materials, and equipment required to furnish and install 96-inch diameter sewer pipe in accordance with the Contract Documents.

PI-4.9-02. Work Included

Work under this Item shall generally be comprised of all labor, materials and equipment required for HDPE, FRP or PCCP Sewer Pipe 96-inch Diameter, complete, including, but not be limited to, the following:

- Excavation to the width and depth limits as defined on the Contract Drawings.
- Protection and preparation of subgrade soils.
- Furnishing and installing all sewer pipe in accordance with the Contract Documents, including, but not limited to, pipe, fittings, couplings, accessories, specials and appurtenances.
- Furnishing and providing all labor, materials and equipment necessary to provide thrust restraint, including but not limited to, restrained joints, placing concrete for thrust blocks, steel reinforcing, and temporary excavation support system materials left in place.
- Installation and removal of all temporary watertight bulkheads, dams and plugs as required to protect the Contractor's work from flows in the existing 144" Midland Avenue CSO Transmission Pipeline.
- Any and all intermediate support of the sewer pipe required during installation including, but not limited to, blocking, bracing, overhead support or concrete slabs.
- All watertight connections to existing and new sewers, manholes, structures, and pipes in accordance with the Contract Documents.
- Backfill and compaction within the width and depth limits as defined on the Contract Drawings of trench with common fill materials.
- Testing of installed sewer pipe in accordance with the Contract Documents.

PAYMENT ITEMS

SECTION 4 - UNIT PRICE ITEMS

PI-4.9-03. Related Work Not Included

The following items of work closely related to the installation of HDPE, FRP or PCCP Sewer Pipe 96-inch Diameter are specifically not included under this Item:

- Excavation Below Subgrade
- Miscellaneous Excavation
- Maintenance of Sewer Flows
- Maintenance and Protection of Traffic
- Temporary Excavation Support System
- Dewatering
- Modifications to Existing CSO 044
- Manhole MH-1
- Rock Extrication
- Conveyance Flushing Chambers
- Controlled Low Strength Material
- Select Fill Materials
- Geotextile Stabilization Fabric
- Concrete Foundation for Street Pavement
- Bituminous Asphalt Pavements

PI-4.9-04. Basis of Payment

Payment for HDPE, FRP or PCCP Sewer Pipe 96-inch Diameter will be made based on the actual field measured length of pipe installed as measured along the centerline of the pipe in linear feet multiplied by the unit price per linear foot for each size as stated in the Bid. Measurement of linear footage shall commence and/or end at the outside face of manholes/structures and/or the point of connection to other sewer pipes. The limits of manhole MH-1 shall extend 3-feet horizontally, either direction, from the joint of the 96-inch diameter tee fabricated with 48-inch diameter riser. Measurement of linear footage across fittings (including horizontal and vertical bends, etc.) shall be included in the measured linear footage for payment. No payment shall be made for linear footage measured across the interior of manholes/structures.

PAYMENT ITEMS

SECTION 4 - UNIT PRICE ITEMS

Item 4.10 – Precast Type 2 Manholes (Depth up to 8-feet) – 48-Inch-Diameter, Storm Sewer

PI-4.10-01. Description

Under this Item, the Contractor shall provide all labor, materials, and equipment required for the installation of precast concrete manholes and appurtenances, at depths of up to eight feet (as measured from lowest pipe connection invert to the rim), in accordance with the Contract Documents.

PI-4.10-02. Work Included

Work under this Item shall generally be comprised of all labor, materials and equipment required for Precast Type 2 Manholes, complete, including, but not be limited to, the following:

- Excavation to the limits as defined on the Contract Drawings as required for the installation of all structures, accessories and appurtenances.
- Protection and preparation of subgrade soils.
- Structural foundations, including geotextile fabrics and compacted select fill materials (including NYSDOT 304.12 Type 2).
- Precast concrete manhole structure, complete, including base, slab/footing, riser sections, benchwalls, concrete fill, flow channels, manhole steps, and top slabs.
- Waterproofing below grade concrete surfaces.
- Watertight connections to all piping.
- Brickwork and/or concrete as required for setting manhole covers to final finished grades within allowable tolerances.
- Cast frame, covers and appurtenances.
- Backfill and compaction of excavation for manhole structure.
- Testing of completed manhole in accordance with the Contract Documents.

PI-4.10-03. Related Work Not Included

The following items of work closely related to Precast Type 2 Manholes are specifically not included under this Item:

- Manhole MH-1

PAYMENT ITEMS

SECTION 4 - UNIT PRICE ITEMS

- Modifications to Existing CSO 044
- PVC Sewer Pipe
- Additional Depth of Precast Type 2 Manholes
- Select Fill Materials – NYSDOT 304.12 Type 2 (as used for pavement subbase material)
- Granite Curbing
- Concrete Foundation for Street Pavement
- Bituminous Asphalt Pavements

PI-4.10-04. Basis of Payment

Payment for Precast Type 2 Manholes (depth up to 8-feet) will be made based on the actual number of Precast Type 2 Manholes furnished and installed in accordance with the Contract Documents multiplied by the unit price per each Precast Type 2 Manhole stated in the Bid.

PAYMENT ITEMS

SECTION 4 - UNIT PRICE ITEMS

Item 4.11 –Additional Depth of Precast Type 2 Manholes – 48-Inch-Diameter

PI-4.11-01. Description

Under this Item, the Contractor shall provide all labor, materials, and equipment required for the installation of additional depth of precast concrete manholes and appurtenances beyond eight-feet, (as measured from lowest pipe connection invert to the rim) in accordance with the Contract Documents.

PI-4.11-02. Work Included

Work under this Item shall generally be comprised of all labor, materials and equipment required for additional depth of Precast Type 2 Manholes, complete, including, but not be limited to, the following:

- Additional excavation to the limits as defined on the Contract Drawings as required for the installation of all structures, accessories and appurtenances.
- Precast concrete manhole risers and manhole steps.
- Waterproofing below grade concrete surfaces.
- Backfill and compaction of excavation for manhole structure
- Additional testing of completed manhole in accordance with the Contract Documents.

PI-4.11-03. Related Work Not Included

The following items of work closely related to Additional Depth of Precast Type 2 Manholes are specifically not included under this Item:

- Manhole MH-1
- Precast Type 2 Manholes (depth up to 8 feet)

PI-4.11-04. Basis of Payment

Payment for Additional Depth of Precast Type 2 Manholes of each size will be made based on the actual field measured total vertical feet of manhole structure as measured from the invert of the lowest sewer connection to the top (rim elevation) of the cover frame, minus eight feet, furnished and installed in accordance with the Contract Documents multiplied by the unit price per vertical foot stated in the Bid.

PAYMENT ITEMS

SECTION 4 - UNIT PRICE ITEMS

Page Left Intentionally Blank

PAYMENT ITEMS

SECTION 4 - UNIT PRICE ITEMS

Item 4.12– Bioretention Swales
Item 4.12a – Northern Swale
Item 4.12b – Southern Swale

PI-.4.12-01. Description

Under this Item, the Contractor shall provide all labor, materials, and equipment required to furnish and install the bioretention swales in accordance with the Contract Documents.

PI-4.12-02. Work Included

Work under this Item shall generally be comprised of all labor, materials and equipment required for Bioretention Swales, complete, including, but not be limited to, the following:

- Excavation to the width and depth limits as defined on the Contract Drawings.
- Protection and preparation of subgrade soils.
- Foundations, including geotextile stabilization fabrics and compacted select fill materials.
- Furnishing and installing all perforated under drain pipe in accordance with the Contract Documents, including, but not limited to, pipe, fittings, couplings, accessories, connections, specials and appurtenances.
- Geotextile filter fabric.
- Backfill and compaction within the width and depth limits as defined on the Contract Drawings.
- Application of seeding as indicated in the Contract Documents.
- Watering and maintenance of areas to be seeded as may be necessary to establish grasses.

PI-4.12-03. Related Work Not Included

The following items of work closely related Bioretention Swales are specifically not included under this Item:

- Excavation Below Subgrade
- Miscellaneous Excavation
- Maintenance of Sewer Flows
- Maintenance and Protection of Traffic

PAYMENT ITEMS

SECTION 4 - UNIT PRICE ITEMS

- Temporary Excavation Support System
- Dewatering
- Select Fill Materials
- Geotextile Stabilization Fabric
- Catch Basins
- Concrete Foundation for Street Pavement
- Bituminous Asphalt Pavements
- Granite Curbing
- Replacement of City of Syracuse Survey Monuments
- Bioretention Basin
- Restoration of Non-Paved Surfaces
- Trench Drain

PI-4.12-04. Basis of Payment

Payment for Bioretention Swales at each location will be made based on the actual field measured length of bioretention swale installed as measured along the centerline of the underdrain pipe in linear feet multiplied by the unit price per linear foot for each location as stated in the Bid. Measurement of linear footage shall commence and/or end at the outside face of catch basins/structures/trench drain and/or the limits shown on the Contract Drawings. No payment shall be made for linear footage measured across the interior of catch basins/structures.

PAYMENT ITEMS

SECTION 4 - UNIT PRICE ITEMS

Item 4.13 – Precast Stormwater Storage Tank

PI-4.13-01. Description

Under this Item, the Contractor shall provide all labor, materials, and equipment required for the installation of a precast stormwater storage tank and appurtenances, in accordance with the Contract Documents.

PI-4.13-02. Work Included

Work under this Item shall generally be comprised of all labor, materials and equipment required for Precast Stormwater Storage Tank, complete, including, but not be limited to, the following:

- Excavation to the limits as defined on the Contract Drawings as required for the installation of all structures, accessories and appurtenances.
- Protection and preparation of subgrade soils.
- Structural foundations, including geotextile fabrics and compacted select fill materials.
- Precast stormwater storage tank, complete, including base, slab/footing, riser sections, concrete fill, and top slabs.
- Waterproofing below grade concrete surfaces.
- Watertight connections to all piping.
- Brickwork and/or concrete as required for setting manhole covers to final finished grades within allowable tolerances.
- Cast frame, covers and appurtenances.
- Backfill and compaction of excavation for structure.

PI-4.13-03. Related Work Not Included

The following items of work closely related to Precast Stormwater Storage Tank are specifically not included under this Item:

- Conveyance Flushing Chambers
- PVC Sewer Pipe
- Concrete Foundation for Street Pavement

PAYMENT ITEMS

SECTION 4 - UNIT PRICE ITEMS

- Bituminous Asphalt Pavements

PI-4.13-04. Basis of Payment

Payment for Precast Stormwater Storage Tank will be made based on the single Precast Stormwater Storage Tank furnished and installed in accordance with the Contract Documents multiplied by the unit price per each Precast Stormwater Storage Tank stated in the Bid.

PAYMENT ITEMS

SECTION 4 - UNIT PRICE ITEMS

Item 4.14 – Remove Existing Trolley Rail

PI-4.14-01. Description

Under this Item, the Contractor shall provide all labor, materials, and equipment required to remove existing trolley rail in accordance with the Contract Documents.

PI-4.14-02. Work Included

Work under this Item shall generally be comprised of all labor, materials and equipment required to Remove Existing Trolley Rail, complete, including, but not limited to, the following:

- Cut, remove, and properly dispose of existing trolley rail where encountered within the limits of excavation for other Payment Items.

PI-4.14-03. Related Work Not Included

The following items of work closely related to Remove Existing Trolley Rail are specifically not included under this Item:

- All other Payment Items

PI-4.14-04. Basis of Payment

Payment for removal of existing trolley rail will be made based on the actual field measured length of existing trolley rail removed as measured along the center line of each rail in linear feet multiplied by the unit price per linear foot stated in the Bid.

PAYMENT ITEMS

SECTION 4 - UNIT PRICE ITEMS

Page Left Intentionally Blank

PAYMENT ITEMS

SECTION 4 - UNIT PRICE ITEMS

Item 4.15– Sidewalk Restoration

PI-4.15-01. Description

Under this Item, the Contractor shall provide all labor, materials, and equipment required to restore existing sidewalks disturbed during construction in accordance with the Contract Documents.

PI-4.15-02. Work Included

Work under this Item shall generally be comprised of all labor, materials and equipment required for Sidewalk Restoration, complete, including but not limited to, the following:

- Excavation outside of the width and depth limits for other Payment Items
- Protection and preparation of subgrade soils.
- Sidewalk foundations, includingcompacted select fill materials.
- Furnish and placing concrete and expansion joints
- Concrete finishes.
- Coordination with Owner's independent testing laboratory, as required

PI-4.15-03. Related Work Not Included

The following items of work closely related to Sidewalk Restoration are specifically not included under this Item:

- Maintenance and Protection of Traffic
- Restoration of Non-Paved Surfaces
- Concrete Foundation for Street Pavement
- Embedded Preformed Detectable Warning Units

PI-4.15-04. Basis of Payment

Payment for Sidewalk Restoration will be made based on the actual field measured volume in cubic yards of sidewalk restored within the limits specified in the Contract Documents or ordered by the Engineer multiplied by the unit price per cubic yard stated in the Bid.

PAYMENT ITEMS

SECTION 4 - UNIT PRICE ITEMS

Page Left Intentionally Blank

PAYMENT ITEMS

SECTION 4 - UNIT PRICE ITEMS

Item 4.16 – Embedded Preformed Detectable Warning Units

PI-4.16-01. Description

Under this Item, the Contractor shall provide all labor, materials, and equipment required to furnish and install embedded preformed detectable warning units in accordance with the Contract Documents.

PI-4.16-02. Work Included

Work under this Item shall generally be comprised of all labor, materials, and equipment required for Embedded Preformed Detectable Warning Units, complete, including, but not limited to, the following:

- Furnish and install embedded preformed detectable warning units.

PI-4.16-03. Related Work Not Included

The following items of work closely related to Embedded Preformed Detectable Warning Units are specifically not included under this Item:

- Maintenance and Protection of Traffic
- Restoration of Non-Paved Surfaces
- Concrete Foundation for Street Pavement
- Sidewalk Restoration

PI-4.16-04. Basis of Payment

Payment for Embedded Preformed Detectable Warning Units will be made based on the actual field measured area in square feet of embedded preformed detectable warning units installed in accordance with the Contract Documents or ordered by the Engineer multiplied by the unit price per square foot stated in the Bid. This payment will be made in addition to payment for sidewalk restoration of the same area.

PAYMENT ITEMS

SECTION 4 - UNIT PRICE ITEMS

Page Left Intentionally Blank

PAYMENT ITEMS

SECTION 4 - UNIT PRICE ITEMS

Item 4.17 – Granite Curbing

PI-4.17-01. Description

Under this Item, the Contractor shall provide all labor, materials, and equipment required to furnish and install granite curbing in accordance with the Contract Documents.

PI-4.17-02. Work Included

Work under this Item shall generally be comprised of all labor, materials and equipment required for Granite Curbing, complete, including, but not limited to, the following:

- Excavation outside of the width and depth limits for other Payment Items.
- Protection and preparation of subgrade soils.
- Furnish and install new granite curbing as shown on the Contract Drawings, including curb end section, dropped curb sections, and all mortared joints.
- 4-inch-diameter corrugated polyethylene pipe in filter fabric sock, and all required fittings, couplings, connections and appurtenances.
- Furnish and place concrete curb support and expansion joints.
- Coordination with Owner's independent testing laboratory, as required.

PI-4.17-03. Related Work Not Included

The following items of work closely related to Granite Curbing are specifically not included under this Item:

- Maintenance and Protection of Traffic
- Restoration of Non-Paved Surfaces
- Select Fill Materials
- Concrete Foundation for Street Pavement
- Bituminous Asphalt Pavements

PAYMENT ITEMS

SECTION 4 - UNIT PRICE ITEMS

PI-4.17-04. Basis of Payment

Payment for Granite Curbing will be made based on the actual field measured linear footage of new granite curbing as measured along the centerline of curb, installed in accordance with the Contract Documents or ordered by the Engineer multiplied by the unit price per linear foot stated in the Bid.

No payment will be made for Granite Curbing and associated work as required to restore road beyond limits shown on the Contract Documents as ordered by the Engineer due to the failure of the Contractor to adequately protect the existing roadway materials.

PAYMENT ITEMS

SECTION 4 - UNIT PRICE ITEMS

Item 4.18 – Concrete Foundation for Street Pavement

PI-4.18-01. Description

Under this Item, the Contractor shall provide all labor, materials, and equipment required to furnish and install fiber reinforced concrete for street foundations in accordance with the Contract Documents.

PI-4.18-02. Work Included

Work under this Item shall generally be comprised of all labor, materials, and equipment required for Concrete Foundation for Street Pavement, complete, including, but not limited to, the following:

- Excavation outside of the width and depth limits for other Payment Items.
- Protection and preparation of subgrade soils.
- Drilling and grouting steel reinforcement dowels into existing concrete.
- All tack coats and sealing of joints between new and existing pavements.
- Furnish and place fiber reinforced concrete foundation of the type and thickness specified in the Contract Documents to the limits shown on the Contract Drawings or as required to join suitable existing road materials as ordered by the Engineer.
- Curing and protection of installed concrete foundations.
- Coordination with Owner's independent testing laboratory, as required.

PI-4.18-03. Related Work Not Included

The following items of work closely related to Concrete Foundation for Street Pavement are specifically not included under this Item:

- Maintenance and Protection of Traffic
- Restoration of Non-Paved Surfaces
- Bituminous Asphalt Pavements

PAYMENT ITEMS

SECTION 4 - UNIT PRICE ITEMS

PI-4.18-04. Basis of Payment

Payment for Concrete Foundation for Street Pavement will be made based on the actual field measured volume in cubic yards of concrete street foundation furnished and placed in accordance with the Contract Documents and ordered by the Engineer multiplied by the unit price per cubic yard stated in the Bid.

No payment will be made for Concrete Foundation and associated work as required to restore road beyond limits shown on the Contract Drawings as ordered by the Engineer due to failure of the Contractor to adequately protect the existing roadway materials.

PAYMENT ITEMS

SECTION 4 - UNIT PRICE ITEMS

Item 4.19 – Bituminous Asphalt Pavements

Item 4.19a – NYSDOT Item 403.11M Type 1 Base Course
Item 4.19b – NYSDOT Item 403.13M Type 3 Binder Course
Item 4.19c – NYSDOT Item 403.19M Type 7F Top Course

PI-4.19-01. Description

Under this Item, the Contractor shall provide all labor, materials, and equipment required for the installation of bituminous asphalt pavements for restoration of paved surfaces in accordance with the Contract Documents.

PI-4.19-02. Work Included

Work under this Item shall generally be comprised of all labor, materials and equipment required for Bituminous Asphalt Pavements, complete, including, but not limited to, the following:

- Excavation outside of the limits of other Payment Items.
- Protection and preparation of subgrade soils.
- Furnish, place, and compact bituminous asphalt pavements of the type and thickness specified in the Contract Documents to the limits shown on the Contract Drawings or as required to join suitable existing pavements as ordered by the Engineer.
- All tack coats and sealing of joints with new and existing pavements.
- Coordination with Owner's independent testing laboratory, as required.

PI-4.19-03. Related Work Not Included

The following items of work closely related to Bituminous Asphalt Pavements are specifically not included under this Item:

- Maintenance and Protection of Traffic
- Restoration of Non-Paved Surfaces
- Select Fill Materials
- Geotextile Fabrics
- Concrete Foundation for Street Pavement
- Granite Curbing

PAYMENT ITEMS

SECTION 4 - UNIT PRICE ITEMS

PI-4.19-04. Basis of Payment

Payment for Bituminous Asphalt Pavements of each type will be made based on the actual field measured and calculated weight in tons of compacted Bituminous Asphalt Pavements installed in place in accordance with the Contract Documents and ordered by the Engineer multiplied by the unit price per ton stated in the Bid. The in place weight of placed compacted bituminous asphalt pavement materials will be calculated based on the actual field measured area in square yards and compacted in place thickness in inches of placed material multiplied by the following factors:

Type 1 and Type 3: 110 lbs per square yard per inch-thickness

Type 7F: 115 lbs per square yard per inch-thickness

No payment will be made for Bituminous Asphalt Pavements and associated work as required to restore road beyond limits shown on the Contract Drawings as ordered by the Engineer due to failure of the Contractor to adequately protect the existing roadway materials.

PAYMENT ITEMS

SECTION 4 - UNIT PRICE ITEMS

Item 4.20 – Mass Concrete

PI-4.20-01. Description

Under this Item, the Contractor shall provide all labor, materials, and equipment required to place unreinforced, 3,000 psi concrete for miscellaneous applications as specified in the Contract Documents or as ordered by the Engineer.

PI-4.20-02. Work Included

Work under this Item shall generally be comprised of all labor, materials and equipment required for Mass Concrete, complete, including, but not limited to, the following:

- Furnishing and placing unreinforced, 3,000 psi concrete in accordance with the Contract Documents or as ordered by the Engineer.
- Coordination with Owner's independent testing laboratory, as required.

PI-4.20-03. Related Work Not Included

The following items of work closely related to Mass Concrete are specifically not included under this item.

- Miscellaneous Work
- Conveyance Flushing Chambers
- Modifications to CSO 044
- Manhole MH-1
- Relocate Existing Water Mains
- Equipment and Electrical Service and Controls
- Restoration of Non-Paved Surfaces
- Controlled Low Strength Material
- Catch Basins
- Connections to Existing Catch Basins
- 96-Inch-Diameter HDPE, FRP or PCCP Sewer Pipe
- Precast Type 2 Manholes (Depth up to 8-feet)

PAYMENT ITEMS

SECTION 4 - UNIT PRICE ITEMS

- Sidewalk Restoration
- Granite Curbing
- Concrete Foundation for Street Pavement
- Replacement of City of Syracuse Survey Monuments

PI-4.20-04. Basis of Payment

Payment for Mass Concrete will be made based on the actual field measured volume in cubic yards of mass concrete furnished and placed in accordance with the Contract Documents and as ordered by the Engineer multiplied by the unit price per cubic yard stated in the Bid.

PAYMENT ITEMS

SECTION 4 - UNIT PRICE ITEMS

Item 4.21 – Replacement of City of Syracuse Survey Monuments

PI-4.21-01. Description

Under this Item, the Contractor shall provide all labor, materials, and equipment required to replace existing City of Syracuse survey monuments disturbed during the work in accordance with the Contract Documents.

PI-4.21-02. Work Included

Work under this Item shall generally be comprised of all labor, materials and equipment required for Replacement of City of Syracuse Survey Monuments, complete, including, but not limited to, the following:

- Survey of existing monument.
- Excavation outside of the width and depth limits of other Payment Items.
- Protection and preparation of subgrade soils.
- Foundation, including compacted select fill materials.
- Furnish and install PVC pipe, reset existing stone monument and backfill PVC pipe with compacted select fill materials.
- Furnish and place concrete and precast circular blocks.
- Backfill and compaction of excavation.
- Cleanout frame and cover.
- Certification of monument by a New York State licensed land surveyor and completion of City of Syracuse certification requirements.

PI-4.21-03. Related Work Not Included

The following items of work closely related to Replacement of City of Syracuse Survey Monuments are specifically not included under this item.

- All other Payment Items.

PI-4.21-04. Basis of Payment

Payment for Replacement of City of Syracuse Survey Monuments will be made per the actual number of monuments replaced in accordance with the Contract Documents multiplied by the unit price per each stated in the Bid.

PAYMENT ITEMS

SECTION 4 - UNIT PRICE ITEMS

Page Left Intentionally Blank

PAYMENT ITEMS

SECTION 4 - UNIT PRICE ITEMS

Item 4.22 – Replacement of Sewer Vents and Cleanouts

PI-4.22-01. Description

Under this Item, the Contractor shall provide all labor, materials, and equipment required to replace existing sewer vents and cleanouts (limits shown on Contract Drawing G-18) disturbed during the work in accordance with the Contract Documents.

PI-4.22-02. Work Included

Work under this Item shall generally be comprised of all labor, materials and equipment required for Replacement of Sewer Vents and Cleanouts, complete, including, but not limited to, the following:

- Coordination with the Onondaga County Department of Water Environment Protection – Plumbing Control, and the Property Owner.
- Excavation to the limits as shown on the Contract Drawings.
- Protection and preparation of subgrade soils.
- Furnish and install new sewer vent and cleanout and all fittings, specials, and necessary appurtenances, including cast iron P-trap, cast iron wye connection, Fernco adapter, o-rings, 4-inch-diameter cast iron soil pipe, neoprene rubber gaskets, screw cap and ferrule, and steel dome-type cover.
- All watertight connections to existing and new sewers in accordance with the Contract Documents.
- Backfill and compaction of the excavation with common fill materials.
- Testing of installed complete sewer cleanout with vent and associated sewer pipe in accordance with the Contract Documents.

PI-4.22-03. Related Work Not Included

The following items of work closely related to Replacement of Sewer Vents and Cleanouts are specifically not included under this item.

- Maintenance of Sewer Flows
- Maintenance and Protection of Traffic
- Excavation Below Subgrade
- Select Fill Materials – NYSDOT 304.12 Type 2 (as used for pavement subbase material)

PAYMENT ITEMS

SECTION 4 - UNIT PRICE ITEMS

- Restoration of Non-Paved Surfaces
- Concrete Foundation for Street Pavement
- Bituminous Asphalt Pavements

PI-4.22-04. Basis of Payment

Payment for Replacement of Sewer Vents and Cleanouts will be made based on the actual number of sewer vents and cleanouts replaced in accordance with the Contract Documents multiplied by the unit price per each stated in the Bid.

PAYMENT ITEMS

SECTION 4 - UNIT PRICE ITEMS

Item 4.23 – Water Service Replacement

PI-4.23-01. Description

Under this Item, the Contractor shall provide all labor, materials, and equipment required to replace existing water services disturbed during the work in accordance with the Contract Documents.

PI-4.23-02. Work Included

Work under this Item shall generally be comprised of all labor, materials and equipment required for Water Service Replacement, complete, including, but not limited to, the following:

- Coordination with the City of Syracuse Department of Water, the Onondaga County Department of Health, and the property owner.
- Excavation outside of the limits of other Payment Items.
- Verification of location, material, size and elevation of existing water service.
- Protection and preparation of subgrade soils.
- Temporary water service to affected property owners, as required.
- Furnish and install new water service and all fittings, specials, and necessary appurtenances, including tapping saddle, corporation stop, piping, tubing, couplings, and adjustment of existing curb box.
- Backfill and compaction of excavation.
- Flushing, pressure testing and disinfection of installed water service in accordance with the Contract Documents including all water, sampling, chlorine, laboratory analysis, and completion and distribution of required testing documentation.

PI-4.23-03. Related Work Not Included

The following items of work closely related to Water Service Replacement are specifically not included under this item.

- Water Main Relocations
- Restoration of Non-Paved Surfaces
- Select Fill Materials – NYSDOT 304.12 Type 2 (as used for pavement subbase material)

PAYMENT ITEMS

SECTION 4 - UNIT PRICE ITEMS

- Concrete Foundation for Street Pavement
- Bituminous Asphalt Pavements
- Replacement of Lead and Galvanized Steel Water Services

PI-4.23-04. Basis of Payment

Payment for Water Service Replacement will be made per the actual field measured quantity of water services replaced multiplied by the unit price per each stated in the Bid.

No payment shall be made for the replacement of any water service not scheduled for replacement as indicated in the Contract Documents or ordered by the Engineer.

PAYMENT ITEMS

SECTION 4 - UNIT PRICE ITEMS

Item 4.24 – Cast Iron Soil Pipe

Item 4.24a – 4-Inch-Diameter
Item 4.24b – 6-Inch-Diameter

PI-4.24-01. Description

Under this Item, the Contractor shall provide all labor, materials, and equipment required to furnish and install cast iron soil pipe in accordance with the Contract Documents.

PI-4.24-02. Work Included

Work under this Item shall generally be comprised of all labor, materials and equipment required for Cast Iron Soil Pipe, complete, including, but not be limited to, the following:

- Excavation to the width and depth limits as defined on the Contract Drawings.
- Protection and preparation of subgrade soils.
- Furnishing and installing all cast iron soil pipe in accordance with the Contract Documents, including, but not limited to, pipe, fittings, couplings, accessories, specials and appurtenances.
- All watertight connections to existing and new sewers in accordance with the Contract Documents.
- Backfill and compaction within the width and depth limits as defined on the Contract Drawings.
- Testing of installed sewer pipe in accordance with the Contract Documents.

PI-4.24-03. Related Work Not Included

The following items of work closely related Cast Iron Soil Pipe are specifically not included under this Item:

- Excavation Below Subgrade
- Miscellaneous Excavation
- Maintenance of Sewer Flows
- Maintenance and Protection of Traffic
- Temporary Excavation Support System
- Dewatering

PAYMENT ITEMS

SECTION 4 - UNIT PRICE ITEMS

- Modifications to Existing CSO 044
- Rock Extrication
- Controlled Low Strength Material
- Select Fill Materials
- Geotextile Stabilization Fabric
- Catch Basins
- Precast Type 2 Manholes (Depth up to 8-feet)
- Concrete Foundation for Street Pavement
- Bituminous Asphalt Pavements
- Granite Curbing
- Replacement of Sewer Vents and Cleanouts

PI-4.24-04. Basis of Payment

Payment for Cast Iron Soil Pipe of each size will be made based on the actual field measured length of pipe installed as measured along the centerline of the pipe in linear feet multiplied by the unit price per linear foot for each size as stated in the Bid. Measurement of linear footage shall commence and/or end at the outside face of manholes/structures and/or the point of connection to other sewer pipes. Measurement of linear footage across fittings (including horizontal and vertical bends, etc.) shall be included in the measured linear footage for payment. No payment shall be made for linear footage measured across the interior of manholes/structures.

PAYMENT ITEMS

SECTION 4 - UNIT PRICE ITEMS

Item 4-25 – Removal/Disposal of Non-Hazardous Industrial Solid Waste Generated During Earthwork

PI-4.25-01. Description

Under this Item, the Contractor shall provide all labor, material, and equipment required to remove and properly dispose of soil, spoils, and other waste materials which are determined to be Non-Hazardous Industrial Solid Waste, in accordance with New York State Department of Environmental Conservation (NYSDEC) and United States Environmental Protection Agency (USEPA) regulations and the Contract Documents if such material is encountered during performance of the work.

PI-4.25-02. Work Included

Work under this Item shall generally be comprised of all labor, materials and equipment required for Removal/Disposal of Non-Hazardous Industrial Solid Waste Generated During Earthwork complete, including, but not limited to, the following:

- Proper handling, stockpiling, and removal of soils, spoils, and other waste material from excavations.
- Associated additional erosion and sediment control, as necessary.
- Dewatering of soils, spoils, and other waste material, as necessary.
- Conditioning, stabilizing, and preparing soil, spoils, and other waste material, as necessary, to render it suitable for disposal.
- Transportation and proper disposal of soil, spoils, and other waste material as Non-Hazardous Industrial Solid Waste.
- Sampling and laboratory analysis as required by the disposal facility and the Contract Documents.
- Preparation and implementation of health and safety plan, community air monitoring plan, and other required procedures and materials.
- All requirements as specified in Technical Specification Section 02224 of the Contract Documents.
- Additional shop drawings, submittals, records, monitoring and distribution of required documentation and reports.

PAYMENT ITEMS

SECTION 4 - UNIT PRICE ITEMS

PI-4.25-03. Related Work Not Included

The following items of work closely related to the work of Removal/Disposal of Non-Hazardous Industrial Solid Waste Generated During Earthwork are specifically not included under this Item:

- Removal/Disposal of Construction/Demolition Debris Generated During Earthwork.

PI-4.25-04. Basis of Payment

Payment for Removal/Disposal of Non-Hazardous Industrial Solid Waste Generated During Earthwork will be made based on the actual tons of soil, spoils, and other waste material disposed at the receiving disposal facility, less the weight of amendment materials.

No payment will be made under this Payment Item for the removal and disposal of other soils, spoils, and other waste material outside of the limits of construction. No payment will be made for additional transportation fees or other costs resulting from a load of materials being rejected at the receiving disposal facility due to inadequate handling, conditioning, stabilizing, or preparing of the material to render it suitable for disposal.

PAYMENT ITEMS

SECTION 4 - UNIT PRICE ITEMS

Item 4-26 – Removal/Disposal of Construction/Demolition Debris Generated During Earthwork

PI-4.26-01. Description

Under this Item, the Contractor shall provide all labor, material and equipment required to remove and properly dispose of unforeseen below grade concrete and construction debris from areas of excavation. Concrete and construction debris removal shall be accomplished as specified in the Contract Documents.

PI-4.26-02. Work Included

Work under this Item shall generally be comprised of all labor, materials and equipment required for Removal/Disposal of Construction/Demolition Debris Generated During Earthwork, complete, including but not limited to, the following:

- Concrete and construction/demolition debris removal as classified in Technical Specification Sections 02224 Impacted Material Handling and 02300 Earthwork of the Contract Documents
- Transportation and proper disposal of excavated concrete and construction debris.
- Additional shop drawings, submittals, records, monitoring and distribution of required documentation and reports.

PI-4.261-03. Related Work Not Included

The following items of work closely related to the work of Removal/Disposal of Construction/Demolition Debris Generated During Earthwork are specifically not included under this Item:

- Rock Extrication
- Concrete and construction debris generated by the Contractor.
- Removal/Disposal of Non-Hazardous Industrial Solid Waste Generated During Earthwork.

PI-4.26-04. Basis of Payment

Payment for Removal/Disposal of Construction/Demolition Debris Generated During Earthwork will be made based on the actual tons of material disposed at the receiving disposal facility.

No payment will be made under this Payment Item for the removal and disposal of other soils, spoils, rock and other waste material.

PAYMENT ITEMS

SECTION 4 - UNIT PRICE ITEMS

Page Left Intentionally Blank

PAYMENT ITEMS

SECTION 4 - UNIT PRICE ITEMS

Item 4.27 – Geotechnical Instrumentation

Item 4.27a – Geotechnical Instrumentation – Structure Monitoring Point, Type 1
Item 4.27b – Geotechnical Instrumentation – Structure Monitoring Point, Type 2
Item 4.27c – Geotechnical Instrumentation – Utility Monitoring Point
Item 4.27d – Geotechnical Instrumentation – Ground Surface Monitoring Point, Type 1
Item 4.27e – Geotechnical Instrumentation – Ground Surface Monitoring Point, Type 2
Item 4.27f – Geotechnical Instrumentation – Inclinometer
Item 4.27g – Geotechnical Instrumentation – Piezometer

PI-4.27-01. Description

Under this Item, the Contractor shall provide all labor, materials, and equipment required for the installation, maintenance and removal of all geotechnical instrumentation, in accordance with the Contract Documents and as required to complete the work of the Contract.

PI-4.27-02. Work Included

Work under this Item shall generally be comprised of all labor, materials and equipment required for Geotechnical Instrumentation, complete, including, but not limited to the following:

- Excavation outside of the limits of other Payment Items.
- Furnish, install, and maintain all geotechnical instrumentation and equipment specified in the Contract Documents and required for Geotechnical Instrumentation, including, but not limited to, all casing pipes and risers, sands, cements, bentonites, and other fills, roadway boxes, steel rods, screens and other appurtenances.
- Provide the services of all specialized and licensed personnel and professionals in accordance with the Contract Documents.
- Coordination with property owners and utility owners for geotechnical instrumentation and equipment installation, maintenance, and removal.
- All required labor, materials, and equipment as required to furnish, install, maintain, and remove geotechnical instrumentation and equipment.
- Coordination with the Engineer regarding the monitoring and use of geotechnical instrumentation and equipment.
- Repairs and replacement of disturbed, damaged, or otherwise unsuitable geotechnical instrumentation installations and equipment per the judgment of and as directed by the Engineer.
- Removal of geotechnical instrumentation and equipment at completion of construction or as ordered by the Engineer.

PAYMENT ITEMS

SECTION 4 - UNIT PRICE ITEMS

PI-4.27-03. Work Not Included

The following items of work closely related to Geotechnical Instrumentation are specifically not included under this Item:

- All Other Payment Items

PI-4.27-04 Basis of Payment

Payment for Geotechnical Instrumentation of each type will be made based on the actual number of geotechnical instrumentation of each type furnished and installed in accordance with the Contract Documents multiplied by the unit price per each Geotechnical Instrumentation item stated in the Bid.

PAYMENT ITEMS

SECTION 4 - UNIT PRICE ITEMS

Item 4-28 – Replacement of Lead and Galvanized Steel Water Services

PI-4.28-01. Description

Under this item, the Contractor shall provide all labor, materials and equipment required to remove and replace the existing lead and galvanized steel water services from the public main to the property line or limits of easement (whichever is greater) with a new copper service and fittings in accordance with the Contract Documents.

PI-4.28-02. Work Included

Work under this Item shall generally be comprised of all labor, materials and equipment required for Replacement of Lead and Galvanized Steel Water Services, complete, including, but not limited to, the following:

- Coordination with the City of Syracuse Department of Water, the Onondaga County Department of Health, and the Property Owner.
- Excavation outside of the limits of other Payment Items.
- Verification of location, material, size, and elevation of existing water service.
- Preservation and protection of subgrade soils.
- Temporary water service to affected property owners, as required.
- Removal and proper disposal of existing lead and galvanized steel water services.
- Furnish and install new water service and all fittings, specials, and necessary appurtenances including, but not limited to, piping, tubing, couplings, curb stop, curb box, corporation stop, and tapping saddle.
- Backfill and compaction of excavation.
- Flushing, pressure testing and disinfection of installed water service in accordance with the Contract Documents including all water, sampling, chlorine, laboratory analysis, and completion and distribution of required testing documentation.

PI-4.28-03. Related Work Not Included

The following items of work closely related to Replacement of Lead and Galvanized Steel Water Services are specifically not included under this Item:

- Water Main Relocations.
- Water Service Replacement.

PAYMENT ITEMS

SECTION 4 - UNIT PRICE ITEMS

- Restoration of Non-Paved Surfaces.
- Select Fill Materials – NYSDOT 304.12 Type 2 (as used for pavement subbase material)
- Concrete Foundation for Street Pavement.
- Bituminous Asphalt Pavements.

PI-4.28-04. Basis of Payment

Payment for Replacement of Lead and Galvanized Steel Water Services will be made per the actual field measured quantity of lead and galvanized steel water services replaced multiplied by the unit price per each stated in the Bid.

No payment shall be made for the replacement of any water service not scheduled for replacement as indicated in the Contract Documents or ordered by the Engineer.

PAYMENT ITEMS

SECTION 4 - UNIT PRICE ITEMS

Item 4.29 – Trench Drain

PI-4.29-01. Description

Under this Item, the Contractor shall provide all labor, materials, and equipment required to furnish and install the trench drain in accordance with the Contract Documents.

PI-4.29-02. Work Included

Work under this Item shall generally be comprised of all labor, materials and equipment required for trench drain, complete, including, but not be limited to, the following:

- Excavation to the width and depth limits as defined on the Contract Drawings.
- Protection and preparation of subgrade soils.
- Foundations, including geotextile stabilization fabrics and compacted select fill materials.
- Furnishing and installing all perforated under drain pipe in accordance with the Contract Documents, including, but not limited to, pipe, fittings, couplings, accessories, connections, specials and appurtenances.
- Geotextile filter fabric.
- Furnishing and placing concrete.
- Coordination with the Owner's independent testing laboratory, as required.
- Backfill and compaction within the width and depth limits as defined on the Contract Drawings.
- Trench drain grate and frame.

PI-4.29-03. Related Work Not Included

The following items of work closely related Trench Drain are specifically not included under this Item:

- Excavation Below Subgrade
- Miscellaneous Excavation
- Maintenance of Sewer Flows
- Maintenance and Protection of Traffic

PAYMENT ITEMS

SECTION 4 - UNIT PRICE ITEMS

- Temporary Excavation Support System
- Dewatering
- Select Fill Materials
- Geotextile Stabilization Fabric
- Catch Basins
- Concrete Foundation for Street Pavement
- Bituminous Asphalt Pavements
- Granite Curbing
- Replacement of City of Syracuse Survey Monuments
- Bioretention Swales
- Restoration of Non-Paved Surfaces

PI-4.29-04. Basis of Payment

Payment for Trench Drain will be made based on the actual field measured length of trench drain installed as measured along the centerline of the trench drain (which is parallel to the direction of flow of the bioretention swale) multiplied by the unit price per linear foot as stated in the Bid.

PAYMENT ITEMS

SECTION 4 - UNIT PRICE ITEMS

Item 4.30 – Connection to Existing Catch Basins

PI-4.30-01. Description

Under this Item, the Contractor shall provide all labor, materials, and equipment required for the connection to existing catch basins in accordance with the Contract Documents.

PI-4.30-02. Work Included

Work under this Item shall generally be comprised of all labor, materials and equipment required for the connection to existing catch basins, complete, including, but not be limited to, the following:

- Excavation required to connect new pipe to existing catch basin.
- Removal of or modification to existing catch basin wall, as required, to allow for installation of new storm sewer pipe.
- Provide link seal around new pipe at existing catch basin connection and grout opening around new storm sewer pipe watertight.
- Provide and install catch basin trap over new/modified opening.
- Backfill and compaction of existing catch basin to finished grade shown on the Contract Drawings.

PI-4.30-03. Related Work Not Included

The following items of work closely related Bioretention Basin are specifically not included under this Item:

- DIP Sewer Pipe
- PVC Sewer Pipe
- Granite Curbing
- Concrete Foundation for Street Pavement
- Bituminous Asphalt Pavements
- Modifications to Existing Facilities

PAYMENT ITEMS

SECTION 4 - UNIT PRICE ITEMS

PI-4.30-04. Basis of Payment

Payment for Connection to Existing Catch Basins will be made based on the actual number of connections to existing catch basins furnished and installed in accordance with the Contract Documents multiplied by the unit price per each connection to existing catch basins as stated in the Bid.

PAYMENT ITEMS

SECTION 4 - UNIT PRICE ITEMS

Item 4.31 – DIP Sewer Pipe – 12-Inch-Diameter

PI-4.31-01. Description

Under this Item, the Contractor shall provide all labor, materials, and equipment required to furnish and install ductile iron sewer pipe (DIP) in accordance with the Contract Documents.

PI-4.31-02. Work Included

Work under this Item shall generally be comprised of all labor, materials and equipment required for DIP Sewer Pipe, complete, including, but not be limited to, the following:

- Excavation to the width and depth limits as defined on the Contract Drawings.
- Protection and preparation of subgrade soils.
- Furnishing and installing all DIP sewer pipe in accordance with the Contract Documents, including, but not limited to, pipe, fittings, couplings, accessories, specials and appurtenances.
- All watertight connections to existing and new sewers in accordance with the Contract Documents.
- Backfill and compaction within the width and depth limits as defined on the Contract Drawings.
- Testing of installed sewer pipe in accordance with the Contract Documents.

PI-4.31-03. Related Work Not Included

The following items of work closely related DIP Sewer Pipe are specifically not included under this Item:

- Excavation Below Subgrade
- Miscellaneous Excavation
- Maintenance of Sewer Flows
- Maintenance and Protection of Traffic
- Temporary Excavation Support System
- Dewatering
- Relocate Existing Water Mains – C-1 and C-2 to C-3

PAYMENT ITEMS

SECTION 4 - UNIT PRICE ITEMS

- Rock Extrication
- Controlled Low Strength Material
- Select Fill Materials
- Geotextile Stabilization Fabric
- Catch Basins
- Connections to Existing Catch Basins
- Precast Type 2 Manholes
- Concrete Foundation for Street Pavement
- Bituminous Asphalt Pavements
- Granite Curbing
- Replacement of City of Syracuse Survey Monuments
- Replacement of Sewer Vents and Cleanouts
- Bioretention Basin
- Bioretention Swales

PI-4.31-04. Basis of Payment

Payment for DIP Sewer Pipe will be made based on the actual field measured length of pipe installed as measured along the centerline of the pipe in linear feet multiplied by the unit price per linear foot for each size as stated in the Bid. Measurement of linear footage shall commence and/or end at the outside face of manholes/structures and/or the point of connection to other sewer pipes. Measurement of linear footage across fittings (including horizontal and vertical bends, etc.) shall be included in the measured linear footage for payment. No payment shall be made for linear footage measured across the interior of manholes/structures.

PAYMENT ITEMS

SECTION 5 - ALLOWANCE ITEMS

PI-5.01. Description

Under this Section, the Contractor shall provide all labor, materials, and equipment required to perform and fully construct the work of the allowance items in accordance with the Contract Documents; construct the structures and appurtenant facilities; furnish, install, test, meet the specified performance requirements, place into satisfactory operation, and maintain until final acceptance, the equipment, piping, and systems pertinent thereto; and fully complete the work of the allowance items ordered by the Engineer.

The work of this Section also includes all accessories, appurtenances, and other work needed to complete this Contract, except those related to the work of these items but specifically included under other Payment Item Sections of this Contract.

The schedules of the work which may be included have been shown solely for the convenience of the Owner, Engineer, and Contractor, and do not necessarily include all of the items of work which are shown and specified and which are needed under this Contract.

PI-5.02. Payment

Prior to performing work under each allowance payment item, the Contractor shall inspect the work to be performed and develop a scope and budget for the work tasks identified under each allowance item for review by the Engineer. Upon receiving the Engineer's authorization, the Contractor shall proceed with the work. Payment for each item shall be made on a time and materials basis in accordance with the General Provisions.

If, during the performance of the work identified in the authorized scope and budget for the allowance items, the Contractor encounters an unforeseen condition, he shall immediately notify the Engineer and provide a scope and budget for the work necessary to rectify the conditions. The additional work to address such conditions shall be approved prior to advancing the work.

PI-5.03. Fixed Amount Price

A fixed amount price as identified on the Bid shall apply to the Allowance Items, and the Contractor's Bid Price shall equal this price. In the event a Bidder fails to conform to this requirement, the Engineer will revise the bid proposal using the fixed price that was violated by the Bidder.

PI-5.04. No Payment

No payment will be made under this section for work performed by the Contractor not specified in the Contract Documents or authorized by the Engineer. No payment will be made under this section for work related to the work of this section which is specifically included under other payment item sections.

PAYMENT ITEMS

SECTION 5 - ALLOWANCE ITEMS

Page Left Intentionally Blank

PAYMENT ITEMS

SECTION 5 - ALLOWANCE ITEMS

Item 5.1 – Miscellaneous Existing Utility Modifications Allowance

PI-5.1-01. Description

Under this Item, as the result of unforeseen conditions or as ordered by the Engineer, the Contractor shall provide all labor, materials, and equipment required to complete miscellaneous modifications to existing utilities that are required to complete the work of the Contract, but are not identified in the Contract Documents, as directed by the Engineer.

PI-5.1-02. Work Included

It is anticipated that the work for this Payment Item will generally include, but is not limited to, the following items of work associated with modifications to existing utilities that are not identified in the Contract Documents:

- Demolition, removal, disposal, abandonment, cutting and capping, bulkheading, relocation, and/or replacement of existing water mains and services, sanitary and combined sewers, laterals, and associated structures, storm sewers, laterals and associated structures, electrical conduit and conductors, and other existing utilities, in addition to the work of the Contract, as directed by the Engineer.

- Associated additional clearing of site to allow for completion of additional work.

- Associated additional excavation, backfill, and select fill materials to allow for completion of additional work.

- Associated additional temporary excavation support system to allow for completion of additional work.

- Associated additional dewatering to allow for completion of additional work.

- Associated additional maintenance and bypassing of existing utilities to allow for completion of additional work.

- Associated additional leakage testing, pressure testing, and other required testing to allow for completion of additional work.

- Associated additional permits and certifications to allow for completion of additional work.

- Associated additional shop drawings and submittals to allow for completion of additional work.

- Associated additional maintenance and protection of traffic to allow for completion of additional work.

PAYMENT ITEMS

SECTION 5 - ALLOWANCE ITEMS

- Associated additional erosion and sediment control to allow for completion of additional work.
- Associated additional temporary pavements to allow for completion of additional work.
- Associated additional coordination with utility owner to allow for completion of additional work.

PI-5.1-03. Related Work Not Included

The following items of work closely related to the miscellaneous existing utilities modifications work are specifically not included under this Item:

- Removal, abandonment, relocation and/or replacement of existing utilities shown, specified, or scheduled in the Contract Documents.
- Relocation of Existing Utilities by Utility Owners Allowance

PI-5.1-04. Basis of Payment

Payment for this work will be made on a time and materials basis in accordance with the General Provisions.

PAYMENT ITEMS

SECTION 5 - ALLOWANCE ITEMS

Item 5.2 – Relocation of Existing Utilities by Utility Owners Allowance

PI-5.2-01. Description

Under this Item, the Contractor shall coordinate with and provide direct payment to utility owners for the complete relocation of existing utilities by utility owners as shown, specified or scheduled in the Contract Documents.

PI-5.2-02. Work Included

It is anticipated that the work for this Payment Item will generally include, but is not limited to, the following items of work associated with the relocation of existing utilities by utility owners:

- Associated coordination with utility owner to allow for completion of work.
- Direct payment to utility owners for the relocation of existing utilities as shown, specified or scheduled in the Contract Documents.
- All necessary utility relocations are depicted on the Contract Drawings. In the event an additional utility relocation is identified as required to adequately complete the work of the contract, the Contractor shall obtain prior approval from the Engineer, who shall determine if the additional utility relocation is required to complete the work of the contract.

PI-5.2-03. Related Work Not Included

The following items of work closely related to the relocation of existing utilities by utility owners are specifically not included under this Item:

- Removal, relocation, replacement and abandonment, as required, of existing underground combined, sanitary and storm sewers and potable water utilities, including replacement of potable water services and sanitary laterals.

PI-5.2-04. Basis of Payment

Payment for this work will be made on the actual cost of the utility relocations as performed by the utility owner and as invoiced to the Contractor by the utility owners. The Contractor shall be responsible for payment to the utility owners for charges incurred for relocation work. The Contractor shall not be allowed to add any mark-up to these charges for overhead, profit or any other reasons in request for payment from the Owner. The Contractor shall submit to the Engineer invoices from the utility owners with the Contractor's payment application to the Owner for relocation of existing utilities by utility owners. Invoices shall describe the scope of work performed by the utility owners and the cost associated with this scope of work.

PAYMENT ITEMS

SECTION 5 - ALLOWANCE ITEMS

Page Left Intentionally Blank

PAYMENT ITEMS

SECTION 5 - ALLOWANCE ITEMS

Item 5.3– Mitigation Measures for Groundwater Dewatering

PI-5.3-01. Description

Under this Item, the Contractor shall provide Mitigation Measures for Groundwater Dewatering when Onondaga Creek in-stream chloride concentrations exceed limits specified in the Contract Documents and Mitigation Measures are ordered by the Engineer.

PI-5.3-02. Work Included

It is anticipated that the work of Mitigation Measures for Groundwater Dewatering will generally include, but not be limited to, the following items of work:

- Limiting the flow rate from groundwater dewatering wells with the highest concentrations of chlorides.
- Increasing the flow rate from groundwatering dewatering wells with the lowest concentrations of chlorides.
- Diverting flow from groundwater dewatering wells to sewers within the Owner's collection system.
- Discharging groundwater flows to underlying soils for the purpose of groundwater recharge.
- Any one or combination of mitigation measures described in the Contract Documents.
- All labor, materials, services, and equipment as required to implement, maintain, and remove groundwater dewatering mitigation measures when ordered by the Engineer.

PI-5.3-03. Related Work Not Included

The following items of work closely related to Mitigation Measures for Groundwater Dewatering are specifically not included under this Item:

- Dewatering

PI-5.3-04. Basis of Payment

Payment for this work will be made on a time and materials basis in accordance with the General Provisions.

PAYMENT ITEMS

SECTION 5 - ALLOWANCE ITEMS

Page Left Intentionally Blank

PAYMENT ITEMS

SECTION 5 - ALLOWANCE ITEMS

Item 5.4 – Steel Price Adjustment

PI- 5.4-01. Description

This Item will provide for additional compensation to the Contractor for increases, or repayment by the Contractor for decreases, in the price of steel products as described in Special Project Conditions Section P-041, Provisions for Steel Price Adjustment.

PI- 5.4-02. Work Included

Materials eligible for Steel Price Adjustment under this Contract are described in Special Project Conditions Section P-041.

PI- 5.4-03 Related Work Not Included

The following items of work closely related to Steel Price Adjustment are specifically not included under this Item:

- All other Payment Items.

PI- 5.4-04. Basis of Payment

Price adjustments shall be based upon the computations and described in Special Project Conditions Section P-041. Adjustments, either positive or negative, will be made under this Item when the accumulated amount for steel price adjustment exceeds $5,000, or at such time the Owner deems appropriate. Accumulated steel price adjustments not meeting either of these criteria will be made in the Final Payment.

Quantities of eligible materials or referenced in Special Project Conditions Section P-041, will be considered eligible work. Work performed by the Contractor at its own expense, that was not authorized to be performed, or that was not performed in accordance with the Contract Documents shall not be eligible for price adjustment.

No payment will be made under this Item for costs that, in the opinion of the Owner, have not been sufficiently documented.

PAYMENT ITEMS

SECTION 5 - ALLOWANCE ITEMS

Page Left Intentionally Blank

PAYMENT ITEMS

SECTION 5 - ALLOWANCE ITEMS

Item 5.5 – Fuel Price Adjustment

PI- 5.5-01. Description

This Item will provide for additional compensation to the Contractor for increases, or repayment by the Contractor for decreases, in the price of fuel products as described in Special Project Conditions Section P-042, Provisions for Fuel Price Adjustment.

PI- 5.5-02. Work Included

Materials eligible for Fuel Price Adjustment under this Contract are described in Special Project Conditions Section P-042.

PI- 5.5-03 Related Work Not Included

The following items of work closely related to Fuel Price Adjustment are specifically not included under this Item:

- All other Payment Items.

PI- 5.5-04. Basis of Payment

Price adjustments shall be based upon the computations and described in Special Project Conditions Section P-042. Adjustments, either positive or negative, will be made under this Item when the accumulated amount for fuel price adjustment exceeds $5,000, or at such time the Owner deems appropriate. Accumulated fuel price adjustments not meeting either of these criteria will be made in the Final Payment.

Quantities of eligible materials or referenced in Special Project Conditions Section P-042, will be considered eligible work. Work performed by the Contractor at its own expense, that was not authorized to be performed, or that was not performed in accordance with the Contract Documents shall not be eligible for price adjustment.

No payment will be made under this Item for costs that, in the opinion of the Owner, have not been sufficiently documented.

PAYMENT ITEMS

SECTION 5 - ALLOWANCE ITEMS

Page Left Intentionally Blank

PAYMENT ITEMS

SECTION 5 - ALLOWANCE ITEMS

Item 5.6 – Asphalt Price Adjustment

PI- 5.6-01. Description

This Item will provide for additional compensation to the Contractor for increases, or repayment by the Contractor for decreases, in the price of asphalt products as described in Special Project Conditions Section P-045, Provisions for Asphalt Price Adjustment.

PI- 5.6-02. Work Included

Materials eligible for Asphalt Price Adjustment under this Contract are described in Special Project Conditions Section P-045.

PI- 5.6-03 Related Work Not Included

The following items of work closely related to Asphalt Price Adjustment are specifically not included under this Item:

- All other Payment Items.

PI- 5.6-04. Basis of Payment

Price adjustments shall be based upon the computations and described in Special Project Conditions Section P-045. Adjustments, either positive or negative, will be made under this Item when the accumulated amount for asphalt price adjustment exceeds $5,000, or at such time the Owner deems appropriate. Accumulated asphalt price adjustments not meeting either of these criteria will be made in the Final Payment.

Quantities of eligible materials or referenced in Special Project Conditions Section P-045, will be considered eligible work. Work performed by the Contractor at its own expense, that was not authorized to be performed, or that was not performed in accordance with the Contract Documents shall not be eligible for price adjustment.

No payment will be made under this Item for costs that, in the opinion of the Owner, have not been sufficiently documented.

PAYMENT ITEMS

SECTION 5 - ALLOWANCE ITEMS

Page Left Intentionally Blank

PAYMENT ITEMS

SECTION 5 - ALLOWANCE ITEMS

Item 5.7 – Additional Site Restoration Allowance

PI-5.7-01. Description

Under this Item, the Contractor shall provide all labor, materials, and equipment required to complete additional site restoration that is required to complete the work of the Contract, but is not identified in the Contract Documents, as directed by the Engineer.

PI-5.7-02. Work Included

It is anticipated that the work for this Payment Item will generally include, but is not limited to, the following items of work associated with additional site restoration that are not identified in the Contract Documents:

- Associated additional clearing of site to allow for completion of additional work.
- Associated additional protection and preparation of subgrade soils.
- Associated additional excavation, backfill, and select fill materials to allow for completion of additional work.
- Associated additional temporary excavation support system to allow for completion of additional work.
- Associated additional dewatering to allow for completion of additional work.
- Associated additional maintenance and bypassing of existing utilities to allow for completion of additional work.
- Associated additional materials including, but not limited to, pipe, fittings, couplings, accessories, connections, specials, appurtenances, and geotextile fabrics.
- Associated placement of plantings including, but not limited to application, removal/loosening of burlap, furnishing and placing wrapping paper, removal and proper disposal of planting container, and furnishing and installing hardwood stakes, wire, and reinforced rubber hose.
- Associated additional spreading of topsoil and seeding.
- Associated additional furnishing and placement of mulch and compost.
- Associated additional water and maintenance of areas to be seeded or planted as may be necessary to establish grasses and plants.

PAYMENT ITEMS

SECTION 5 - ALLOWANCE ITEMS

- Associated additional leakage testing, pressure testing, and other required testing to allow for completion of additional work.
- Associated additional permits and certifications to allow for completion of additional work.
- Associated additional shop drawings and submittals to allow for completion of additional work.
- Associated additional maintenance and protection of traffic to allow for completion of additional work.
- Associated additional erosion and sediment control to allow for completion of additional work.
- Associated additional temporary pavements to allow for completion of additional work.
- Associated additional sidewalk restoration.
- Associated additional pavement materials.
- Associated additional coordination with utility owner to allow for completion of additional work.
- Associated additional coordination with Owner's independent laboratory, as required.

PI-5.7-03. Related Work Not Included

The following items of work closely related to additional site restoration work are specifically not included under this Item:

- Miscellaneous Work
- Temporary Parking Area at 807-809 South Avenue
- Modifications to Existing Facilities
- Plantings
- Restoration of Non-Paved Surfaces
- Select Fill Materials
- Bioretention Basin

PAYMENT ITEMS

SECTION 5 - ALLOWANCE ITEMS

- Bioretention Swales
- Sidewalk Restoration
- Concrete Foundation for Street Pavement
- Bituminous Asphalt Pavements

PI-5.7-04. Basis of Payment

Payment for this work will be made on a time and materials basis in accordance with the General Provisions.