ONONDAGA COUNTY GREEN INFRASTRUCTURE PROGRAM
2013 ROAD RECONSTRUCTION GI PROJECTS
ISSUED FOR CONSTRUCTION
FOR COUNTY OF ONONDAGA DEPARTMENT OF WATER ENVIRONMENT PROTECTION (OCDWEP)
OCDWEP COMMISSIONER: TOM RHOADS

DRAWING INDEX

SHEET NO	DRAWING NO.	DESCRIPTION
GENERAL		
1	G-1	TITLE SHEET
2	G-2	ABBREVIATIONS. LEGENDS, AND NOTES
CIVIL		
3	C-1	ONEIDA STREET SITE PLAN
4	C-2	SOUTH CLINTON STREET SITE PLAN
5	C-3	RICHMOND AVENUE SITE PLAN SHEET 1 OF 2
6	C-4	RICHMOND AVENUE SITE PLAN SHEET 1 OF 2
7	C-5	DETAILS 1 OF 3
8	C-6	DETAILS 2 OF 3
9	C-7	DETAILS 3 OF 3

NOTE: IT IS A VIOLATION OF THE NEW YORK STATE EDUCATION LAW FOR ANY PERSON TO ALTER THIS DOCUMENT IN ANY WAY, UNLESS ACTING UNDER THE DIRECTION OF A LICENSED PROFESSIONAL ENGINEER. IF A DOCUMENT BEARING THE SEAL OF AN ENGINEER IS ALTERED, THE ALTERING ENGINEER SHALL AFFIX TO THE DOCUMENT THEIR SEAL AND THE NOTATION "ALTERED BY" FOLLOWED BY THEIR SIGNATURE AND THE DATE OF SUCH ALTERATION, AND A SPECIFIC DESCRIPTION OF THE ALTERATION.

RICHMOND AVENUE

PROJECT LOCATIONS: 2013 GI ROAD RECONSTRUCTION PROJECTS

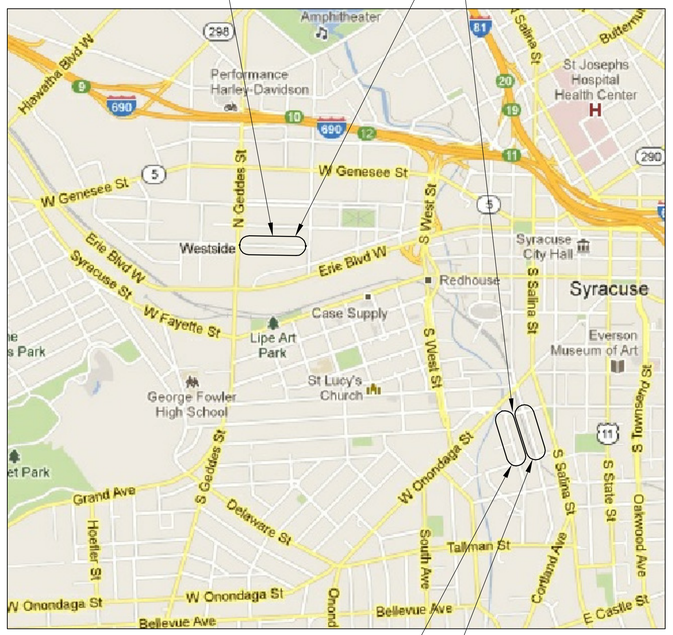

ONEIDA STREET

S. CLINTON STREET

LOCATION MAP

NOT TO SCALE

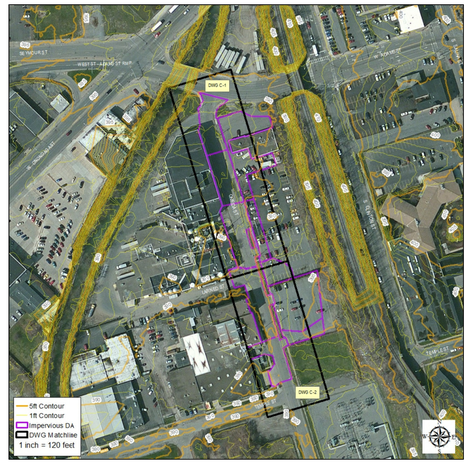

ONEIDA STREET (CS0 037)

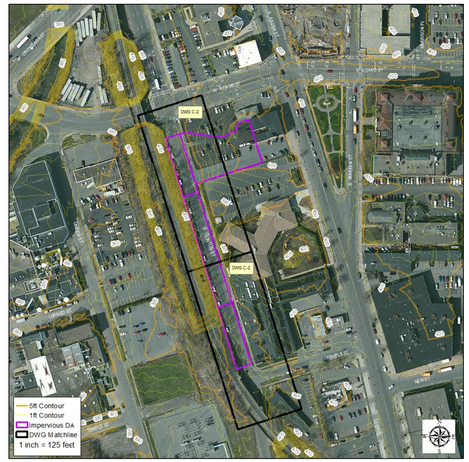

S. CLINTON STREET (CS0 037)

RICHMOND AVENUE (CS0 066/007)

DRAINAGE AREA MAPS

NOT TO SCALE

Save the Rain...

JOANNE M. MAHONEY
ONONDAGA COUNTY EXECUTIVE

STATE OF NEW YORK
DANIEL P. WIBLE
085183-1
LICENSED PROFESSIONAL ENGINEER

NO.	DATE	REVISION	BY	APVD

DSGN Z MONGE | DR T WEINSTEIN | CHK DP WIBLE | APVD DP WIBLE

CH2MHILL®
430 GENESEE STREET
SUITE 400
SYRACUSE NY, 13202

C-198, C-199 & C-201
ONEIDA ST, CLINTON ST & RICHMOND AVE
SYRACUSE, NY
ONONDAGA COUNTY

CIVIL
TITLE SHEET

NTS
VERIFY SCALE
BAR IS ONE INCH ON ORIGINAL DRAWING.
0 1"

DATE	JUNE 2013
PROJ	381098
DWG	G-1
SHEET	1 of 9

REUSE OF DOCUMENTS: THIS DOCUMENT, AND THE IDEAS AND DESIGNS INCORPORATED HEREIN, AS AN INSTRUMENT OF PROFESSIONAL SERVICE, IS THE PROPERTY OF CH2M HILL AND IS NOT TO BE USED, IN WHOLE OR IN PART, FOR ANY OTHER PROJECT WITHOUT THE WRITTEN AUTHORIZATION OF CH2M HILL.

©CH2M HILL 2011. ALL RIGHTS RESERVED.

ISSUED FOR CONSTRUCTION

FILENAME: CAD\G-1.dwg 381098.dwg PLOT DATE: 05/31/2013 PLOT TIME: 07:47:54 AM

ABBREVIATIONS

CB	CATCH BASIN
CONC	CONCRETE
DIA	DIAMETER
DND	DO NOT DISTURB
DP	DEEP PLUGS
DWG	DRAWING
EL	ELEVATION
EXST	EXISTING
FT	FOOT, FEET
FH	FIRE HYDRANT
G	NATURAL GAS
HDPE	HIGH-DENSITY POLYETHYLENE
HT	HEIGHT
INVT	INVERT
MAX	MAXIMUM
MH	MANHOLE
MIN	MINIMUM
No.	NUMBER
NTS	NOT TO SCALE
NYSDOT	NEW YORK STATE DEPARTMENT OF TRANSPORTATION
O.C.	ON CENTER
PVC	POLYVINYL CHLORIDE
R/W	RIGHT-OF-WAY
R&R	REMOVE AND REPLACE
RCP	REINFORCED CONCRETE PIPE
R.O.C.	RUN-OF-CRUSHER
SAN	SANITARY
ST	STORM DRAIN
TC	TOP OF CASTING
TOC	TOP OF CURB
TYP	TYPICAL
UG	UNDERGROUND
VERT	VERTICAL
W	POTABLE WATER

LEGEND

- CATCH BASIN
- CLEAN OUT
- BERM
- PERF PIPE
- SOLID PIPE

SURVEY NOTES:

1. COORDINATES AND NORTH ORIENTATION SHOWN HEREON ARE REFERENCED TO THE NEW YORK STATE PLANE COORDINATE SYSTEM, CENTRAL ZONE, TRANSVERSE MERCATOR PROJECTION, NAD 83/96 USING GPS PROCEDURES AND THE NEW YORK STATE DOT CORS NETWORK.
2. ELEVATIONS SHOWN HEREON ARE REFERENCED TO THE NORTH AMERICAN VERTICAL DATUM OF 1988 USING LIDAR.
3. UNDERGROUND UTILITIES SHOWN HEREON WERE PLOTTED FROM FIELD LOCATIONS, VISIBLE AT THE TIME OF WORK, AND UTILITY COMPANY RECORD DRAWINGS. THE LOCATIONS OF ALL UNDERGROUND UTILITIES SHOULD BE STAKED BY THE RESPECTIVE UTILITY COMPANY PRIOR TO ANY CONSTRUCTION.
4. THE LOCATIONS OF STREET RIGHT-OF-WAY LINES ARE APPROXIMATE AND WERE PLOTTED FOR GRAPHICAL REPRESENTATION ONLY USING TAX MAP INFORMATION AND THE CITY OF SYRACUSE RIGHT-OF-WAY PLAT MAPS. NO TITLE DOCUMENTS WERE PROVIDED OR REVIEWED AT THE TIME OF THIS SURVEY.
5. CITY OF SYRACUSE SURVEY MONUMENTS SHALL NOT BE DISTURBED OR DESTROYED. IF THERE IS A CONFLICT OR A SURVEY MONUMENT IS WITHIN FIVE FEET OF CONSTRUCTION THE CITY OF SYRACUSE, DEPARTMENT OF ENGINEERING MUST BE CONTACTED AT (315)-448-8207 BEFORE ANY DEMOLITION OR CONSTRUCTION BEGINS.

GENERAL NOTES:

1. THIS IS A STANDARD LEGEND SHEET. THEREFORE, NOT ALL OF THE INFORMATION SHOWN MAY BE USED ON THIS PROJECT.

GENERAL CONSTRUCTION NOTES:

1. EXISTING TOPOGRAPHY, STRUCTURES, AND SITE FEATURES ARE SHOWN SCREENED AND/OR LIGHT-LINED. NEW FINISH GRADE, STRUCTURES, AND SITE FEATURES ARE SHOWN HEAVY-LINED.
2. PROVIDE TEMPORARY FENCING AS NECESSARY TO MAINTAIN SECURITY AT ALL TIMES.
3. ELEVATIONS GIVEN ARE TO FINISH GRADE UNLESS OTHERWISE SHOWN.
4. UNLESS SHOWN ON THE LANDSCAPING PLANS, ALL DISTURBED AREAS NOT RECEIVING A HARD SURFACE SHALL BE COVERED WITH GRASS.
5. PROVIDE EROSION AND SEDIMENT CONTROL MEASURES WHERE AND WHEN APPROPRIATE AS PER THE NEW YORK STATE STANDARDS AND SPECIFICATIONS FOR EROSION AND SEDIMENT CONTROL (AUGUST 2005, OR LATEST EDITION). PROTECT EXISTING SITE FEATURES UNLESS OTHERWISE NOTED. CONSULT ENGINEER PRIOR TO INFILTRATION BED INSTALLATION.
6. CONTRACTOR SHALL TAKE ALL OTHER MEASURES TO POSITIVELY PRECLUDE EROSION MATERIALS FROM LEAVING THE SITE. CONTRACTOR TO SUBMIT EROSION CONTROL PLAN.
7. EROSION CONTROLS MUST BE CONSTRUCTED, STABILIZED, AND FUNCTIONAL BEFORE SITE DISTURBANCE BEGINS WITHIN THE TRIBUTARY AREAS OF THOSE CONTROLS.
8. AFTER FINAL SITE STABILIZATION HAS BEEN ACHIEVED, TEMPORARY EROSION CONTROLS MUST BE REMOVED. AREAS DISTURBED DURING REMOVAL OF THE CONTROLS MUST BE STABILIZED IMMEDIATELY.
9. UNTIL THE SITE IS STABILIZED, ALL EROSION CONTROLS MUST BE MAINTAINED PROPERLY. MAINTENANCE MUST INCLUDE INSPECTIONS OF ALL EROSION CONTROLS AFTER EACH RUNOFF EVENT AND ON A WEEKLY BASIS. ALL PREVENTATIVE AND REMEDIAL MAINTENANCE WORK, INCLUDING CLEAN OUT, REPAIR, REPLACEMENT, RE-GRADING, RE-SEEDING, RE-MULCHING AND RE-NETTING, MUST BE PERFORMED IMMEDIATELY. IF EROSION CONTROLS FAIL TO PERFORM AS EXPECTED, REPLACEMENT CONTROLS, OR MODIFICATIONS OF THOSE INSTALLED WILL BE REQUIRED.
10. PROTECT INFILTRATION BED SUBGRADE FROM SEDIMENT DEPOSITION AND/OR COMPACTION DURING CONSTRUCTION. DO NOT ALLOW CONSTRUCTION VEHICLES TO TREAD ON THE INFILTRATION BED AND BIORETENTION SUBGRADE.
11. CONTRACTOR SHALL FOLLOW INFILTRATION BED, AND DRAINAGE CONTROL REQUIREMENTS AS SPECIFIED BY ENGINEER.
12. NOTIFY DIG SAFELY NEW YORK AT LEAST 72 HOURS PRIOR TO CONSTRUCTION.
13. IMMEDIATELY FOLLOWING CONSTRUCTION, RETURN ALL EXISTING IMPROVEMENTS TO PRE-CONSTRUCTION CONDITIONS.
14. AGGREGATE FOR INFILTRATION BED AND BIORETENTION SHALL BE CLEAN-WASHED PRIOR TO PLACEMENT.
15. MAINTAIN LOOSE AND UNDISTURBED STORMWATER INFILTRATION BED SUBGRADE. SCARIFY TOP 6 INCHES. DO NOT ALLOW CONSTRUCTION EQUIPMENT ON TRENCH BOTTOM SURFACE.
16. VERIFY ALL EXISTING UTILITIES AND OTHER IMPROVEMENTS PRIOR TO START OF WORK AND IMMEDIATELY NOTIFY ENGINEER OF POTENTIAL CONFLICTS WITH PROPOSED WORK.
17. PROTECT EXISTING TREES DURING CONSTRUCTION.
18. WHEN ENCOUNTERED WITHIN THE REQUIRED STORMWATER FACILITY EXCAVATION, CONTRACTOR SHALL WRAP EXISTING UTILITIES WITH 30 MIL GEOMEMBRANE SHEETING AND SECURE WITH PVC TAPE AT 2'-0" O.C (MAX) OVERLAP SHEETING BY 2'-0" (MIN). EXTEND SHEETING A MINIMUM OF 1/4 OF THE PIPE CIRCUMFERENCE AND ENSURE OVERLAP RUNS ALONG THE CROWN OF PIPE. SLEEVES AND CASTINGS SHALL BE DRY AND MOISTURE FREE BEFORE SEALING.
19. INSTALL TWO-PIECE HDPE ANTI-SEEP COLLAR BY LANE ENTERPRISES, OR APPROVED EQUAL. INSTALL COLLAR ON THE INDICATED SOLID HDPE PIPES APPROXIMATELY 1' FROM EDGE OF THE INFILTRATION BED.
20. CONTRACTOR SHALL PREPARE A TRAFFIC CONTROL PLAN FOR VEHICULAR AND PEDESTRIAN TRAFFIC IN ACCORDANCE WITH THE FEDERAL HIGHWAY ADMINISTRATION MANUAL ON UNIFORM TRAFFIC CONTROL DEVICES FOR STREETS AND HIGHWAYS (MUTCD). TRAFFIC CONTROL PLAN SHALL BE APPROVED BY THE CITY OF SYRACUSE PRIOR TO THE COMMENCEMENT OF ALL CONSTRUCTION ACTIVITIES. ALL TRAFFIC CONTROL DEVICES SHALL REMAIN IN PLACE AND PROPERLY MAINTAINED FOR THE DURATION OF THE WORK.
21. CONTRACTOR SHALL NOTIFY CITY OF SYRACUSE DEPARTMENT OF PUBLIC WORKS AT LEAST 48 HOURS IN ADVANCE OF CONNECTION TO COMBINED SEWER MAINS. CONNECTION MUST BE MADE BY A LICENSED PLUMBER.
22. CONTRACTOR SHALL NOTIFY CITY OF SYRACUSE DEPARTMENT OF WATER AT LEAST 24 HOURS IN ADVANCE OF STARTING ANY WORK.
23. AT CLOSE OF PROJECT, CONTRACTOR SHALL VERIFY INVERT ELEVATIONS OF ALL STRUCTURES USING A NYS LICENSED SURVEYOR. INVERT ELEVATIONS SHALL BE PROVIDED ON RECORD DRAWINGS.

SECTION / DETAIL DESIGNATIONS

ON DRAWING WHERE SECTION VIEW, OR DETAIL IS TAKEN:

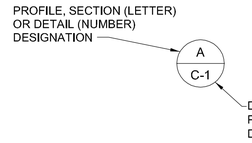

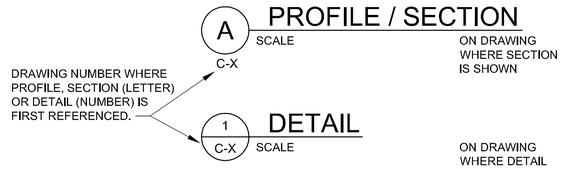

DRAWING TITLE

SCALE

ON DRAWING WHERE ONLY A TITLE IS REQUIRED WITH NO REFERENCE (e.g. PLANS, ELEVATIONS)

SECTION CALLOUT WHERE SECTION CUT IS LESS THAN OR EQUAL TO 3"

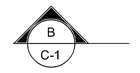

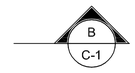

SECTION CALLOUT WHERE SECTION CUT IS GREATER THAN 3"

KEY NOTE

NORTH ARROW

PLANT TAG LEGEND

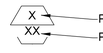

DRAWING NUMBER DESIGNATIONS

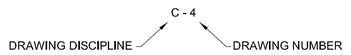

DISCIPLINE LIST:

C	CIVIL
G	GENERAL
L	LANDSCAPING

STATE OF NEW YORK
DANIEL P. WIBLE
085183
LICENSED PROFESSIONAL ENGINEER

©CH2M HILL 2011. ALL RIGHTS RESERVED.

NO.	DATE	DSGN	DR	CHK	REVISION	APVD	BY	APVD
		Z MONGE	T WEINSTEIN			DP WIBLE		DP WIBLE

CH2MHILL®
430 GENESEE STREET
SUITE 400
SYRACUSE NY, 13202

C-198, C-199 & C-201
ONEIDA ST, CLINTON ST & RICHMOND AVE
SYRACUSE, NY
ONONDAGA COUNTY

CIVIL
ABBREVIATIONS, LEGENDS AND NOTES

THIS DOCUMENT, AND THE IDEAS AND DESIGNS INCORPORATED HEREIN, AS AN INSTRUMENT OF PROFESSIONAL SERVICE, IS THE PROPERTY OF CH2M HILL AND IS NOT TO BE USED, IN WHOLE OR IN PART, FOR ANY OTHER PROJECT WITHOUT THE WRITTEN AUTHORIZATION OF CH2MHILL.

REUSE OF DOCUMENTS:

ISSUED FOR CONSTRUCTION

NTS
VERIFY SCALE
BAR IS ONE INCH ON ORIGINAL DRAWING. 0 1"

DATE	JUNE 2013
PROJ	381098
DWG	G-2
SHEET	2 of 9

FILENAME: C:\...\381098.dwg PLOT DATE: 06/06/2013 PLOT TIME: 07:17:34 AM

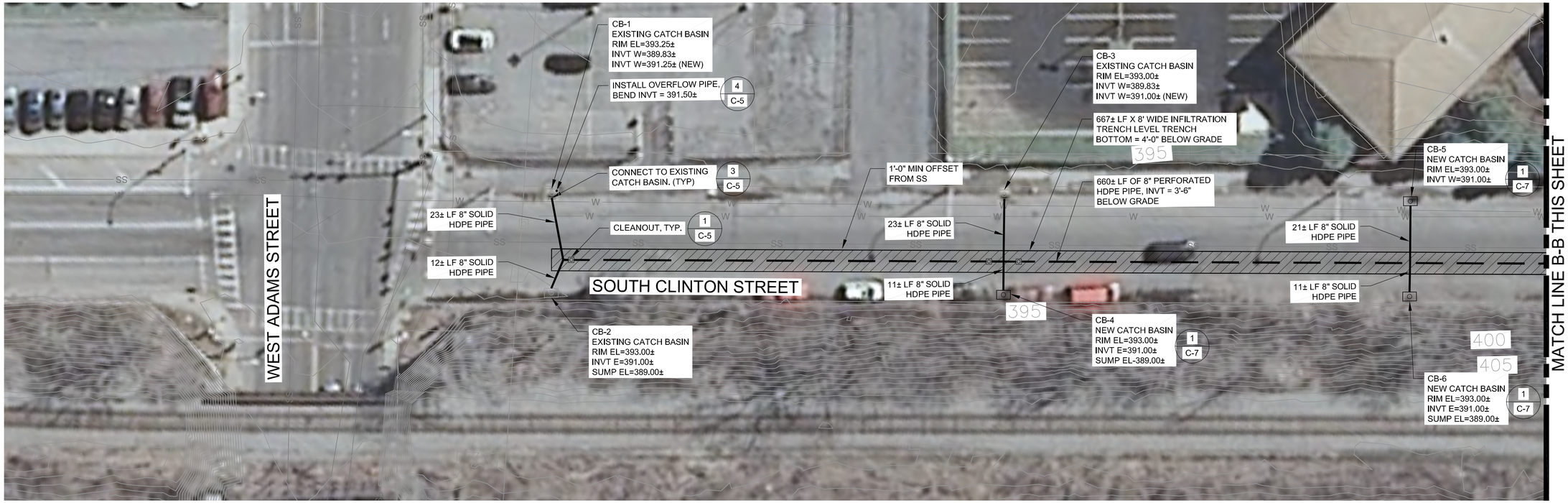

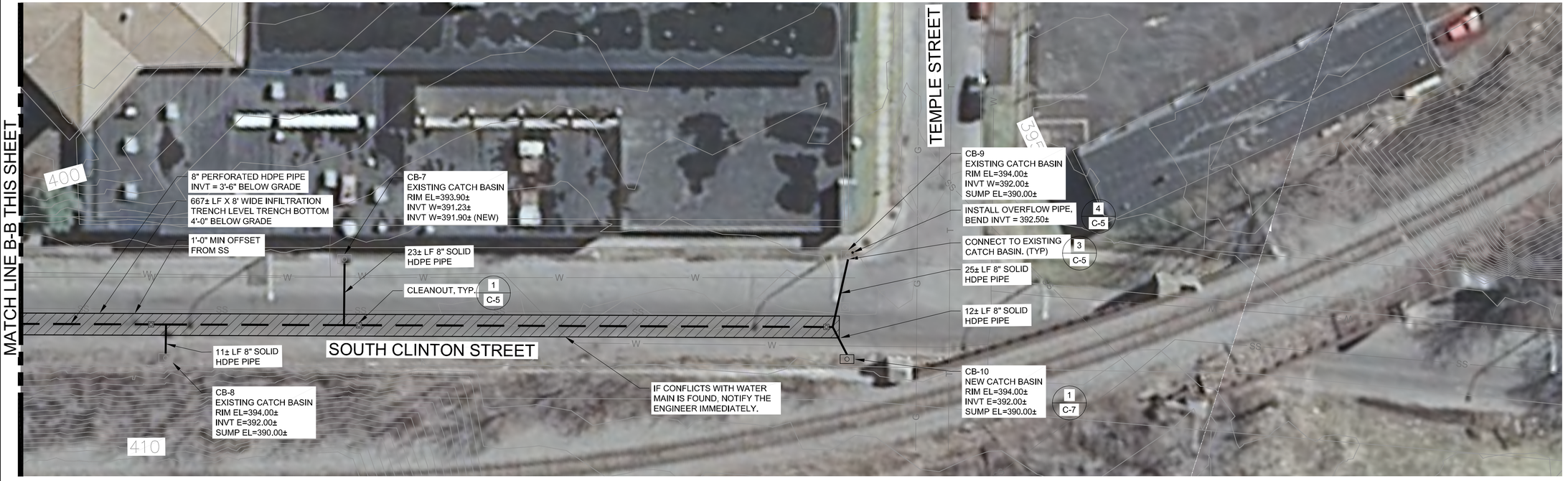

GENERAL CONSTRUCTION NOTES:

1. PLUG EXISTING OUTLETS IN ALL EXISTING CATCH BASINS CONNECTED TO WITH MECHANICAL PLUG AND CONCRETE.
2. ALL 8" HDPE PIPE FROM CATCH BASINS SHALL HAVE A MINIMUM SLOPE OF 1.0% TOWARDS INFILTRATION TRENCHES.
3. ALL CATCH BASINS CONNECTED TO INFILTRATION TRENCH SHALL HAVE A FILTER INSERT (FLEXSTORM BY ADA, OR APPROVED EQUAL) INSTALLED.

N

0 20 40 60
SCALE IN FEET

STATE OF NEW YORK
DANIEL P. WIRTH
085163
LICENSED PROFESSIONAL ENGINEER

NO.	DATE	DSGN	DR	CHK	APVD	BY	REVISION
		Z MONGE	T WEINSTEIN				

©CH2M HILL 2011. ALL RIGHTS RESERVED.

CH2MHILL®
430 GENESEE STREET
SUITE 400
SYRACUSE NY, 13202

CIVIL

SOUTH CLINTON STREET SITE PLAN

C-198, C-199 & C-201
ONEIDA ST, CLINTON ST & RICHMOND AVE
SYRACUSE, NY
ONONDAGA COUNTY

REUSE OF DOCUMENTS:
THIS DOCUMENT AND THE IDEAS AND DESIGNS INCORPORATED HEREIN, AS AN INSTRUMENT OF PROFESSIONAL SERVICE, IS THE PROPERTY OF CH2M HILL AND IS NOT TO BE USED, IN WHOLE OR IN PART, FOR ANY OTHER PROJECT WITHOUT THE WRITTEN AUTHORIZATION OF CH2MHILL.

ISSUED FOR CONSTRUCTION

1"=20'	
VERIFY SCALE	
BAR IS ONE INCH ON ORIGINAL DRAWING. 0 1"	
DATE	JUNE 2013
PROJ	381098
DWG	C-2
SHEET	4 of 9

FILENAME: C:\...\381098.dwg PLOT DATE: 06/06/2013 PLOT TIME: 07:30:04 AM

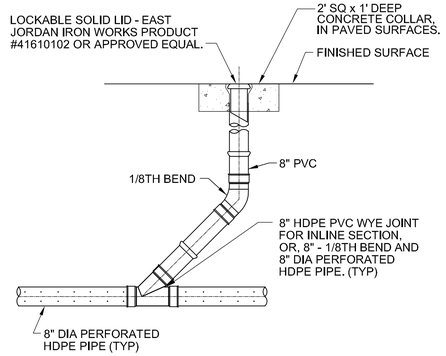

1 CLEAN OUT DETAIL
NTS
C-1

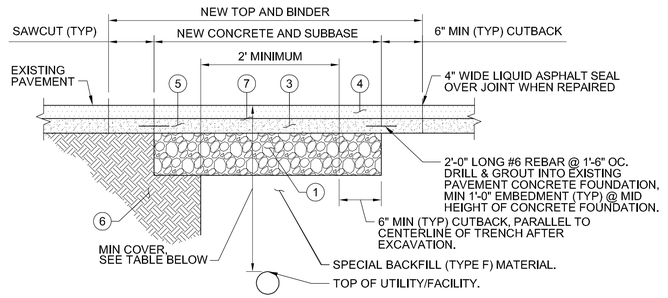

DRAWING KEY	DESCRIPTION
1	SUBBASE COURSE, TYPE "1" RUN-OF-CRUSHER (12")
3	ASPHALT CONCRETE - TYPE 3 BINDER COURSE (ONE - 2" LIFT)
4	ASPHALT CONCRETE - TYPE 7FM TOP COURSE (ONE - 1-1/2" LIFT)
5	FIBER-REINFORCED PORTLAND CEMENT CONCRETE - 3,500 PSI (8")
6	COMPACTED SUBGRADE
7	ASPHALT TACK COAT

PRIVATE UTILITY STREET CUT REPAIR:

1. WHEN 30% OR MORE OF THE PAVEMENT IS EXCAVATED BY PRIVATE UTILITY WORK, THE CITY, AT ITS DISCRETION, MAY REQUIRE RECONSTRUCTION FROM THE CENTER LINE TO THE EDGE/CURB OF THE ENTIRE SECTION.
2. WHEN 60% OR MORE OF THE PAVEMENT LANE AREA IS EXCAVATED BY PRIVATE UTILITY THE ENTIRE AREA FROM THE CENTER LINE OF THE PAVEMENT TO THE CURB MUST BE RECONSTRUCTED.
3. IF ANY PAVEMENT DISTURBANCE OCCURS WITHIN 2 FEET OF THE EDGE/CURB, PAVEMENT RECONSTRUCTION MUST BE COMPLETED TO THE EDGE/CURB.
4. IN AREAS WHERE TRENCH WIDTH VARIES THE PERCENTAGES SHALL BE DETERMINED PER 100 LINEAR FEET ALONG CENTER LINE OF THE STREET. IN INTERSECTIONS THE AREA WILL BE PER QUADRANT OF THE INTERSECTION.
5. EXISTING PAVEMENT IS TO BE SAWCUT FULL DEPTH TO OBTAIN A STRAIGHT AND NEAT EDGE FOR PAVING. SAWCUT IS TO BE MADE AFTER BACKFILLING THE TRENCH TO THE BOTTOM OF NEW PAVEMENT SECTION.

MINIMUM COVER: (UNLESS OTHERWISE APPROVED BY ENGINEER)	
3'-0"	GAS, ELECTRIC, CABLE, TV, TELECOMMUNICATIONS
5'-0"	WATER
3'+ (OR AS APPROVED BY CITY'S ENGINEER)	ALL OTHERS

NOTES:

1. REFER TO CITY OF SYRACUSE STANDARD SPECIFICATIONS OR DETAILS. THE MINIMUM THICKNESS OF EACH LAYER OF BINDER, TOP, SUBBASE AND CONCRETE BASE SHALL MATCH THOSE SHOWN ON STANDARD DETAILS OR MATCH EXISTING WHERE EXISTING CONDITIONS EXCEED MINIMUMS.
2. IN NO CASE SHALL THE TOP OF CONCRETE BASE BE HIGHER THAN THAT OF THE SURROUNDING EXISTING CONCRETE.
3. IF PAVEMENT MARKINGS OR SIGNAL LOOPS ARE DISTURBED OR DESTROYED THEY SHALL BE REPLACED IN ACCORDANCE WITH CITY OF SYRACUSE STANDARDS.
4. MATCH EXISTING PAVEMENT SLOPE.
5. IF, IN THE OPINION OF THE CONTRACTOR, THE EXISTING CONCRETE FOUNDATION IS IN POOR CONDITION, THE ENGINEER SHALL BE CONTACTED FOR PRIOR APPROVAL TO ELIMINATE DOWELS.

2 PIPE TRENCHING/ROAD RESTORATION
NTS
C-1

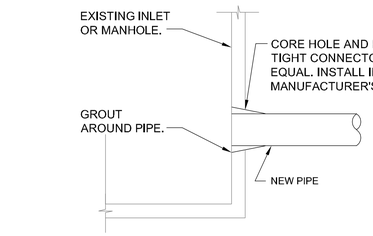

NOTE:
1. ALL CONNECTIONS MUST BE PERMANENTLY WATER TIGHT.

3 PIPE CONNECTION TO EXISTING STRUCTURE
NTS
C-1

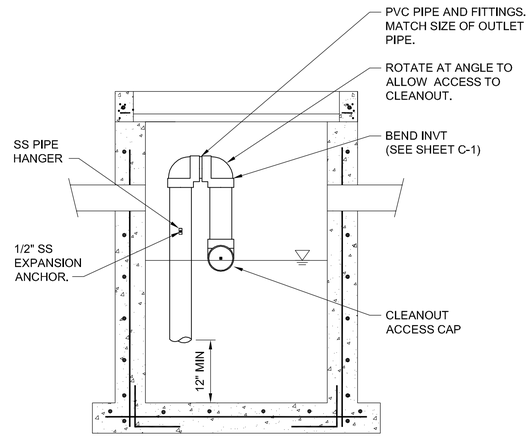

VIEW LOOKING AT OUTLET

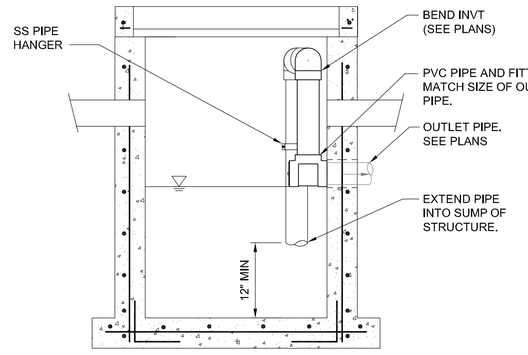

SECTION

4 OVERFLOW U PIPE IN CATCH BASIN
1/2"=1'-0"
C-1

STATE OF NEW YORK
DANIEL P. WIRTH
085183
LICENSED PROFESSIONAL ENGINEER

NO.	DATE	DSGN	REVISION	CHK	DR
				APVD	BY APVD

Z MONGE T WEINSTEIN

© CH2M HILL 2011. ALL RIGHTS RESERVED.

CH2MHILL®
430 GENESEE STREET
SUITE 400
SYRACUSE NY, 13202

C-198, C-199 & C-201
ONEIDA ST, CLINTON ST & RICHMOND AVE
SYRACUSE, NY
ONONDAGA COUNTY

CIVIL
DETAILS 1 OF 3

THIS DOCUMENT, AND THE IDEAS AND DESIGNS INCORPORATED HEREIN, AS AN INSTRUMENT OF PROFESSIONAL SERVICE, IS THE PROPERTY OF CH2M HILL AND IS NOT TO BE USED, IN WHOLE OR IN PART, FOR ANY OTHER PROJECT WITHOUT THE WRITTEN AUTHORIZATION OF CH2MHILL.
REUSE OF DOCUMENTS:

ISSUED FOR CONSTRUCTION

NTS
VERIFY SCALE
BAR IS ONE INCH ON ORIGINAL DRAWING
0 1"

DATE	JUNE 2013
PROJ	381098
DWG	C-5
SHEET	7 of 9

FILENAME: C:\BSC_D25\381098.dwg PLOT DATE: 05/30/2013 PLOT TIME: 03:47:07 PM

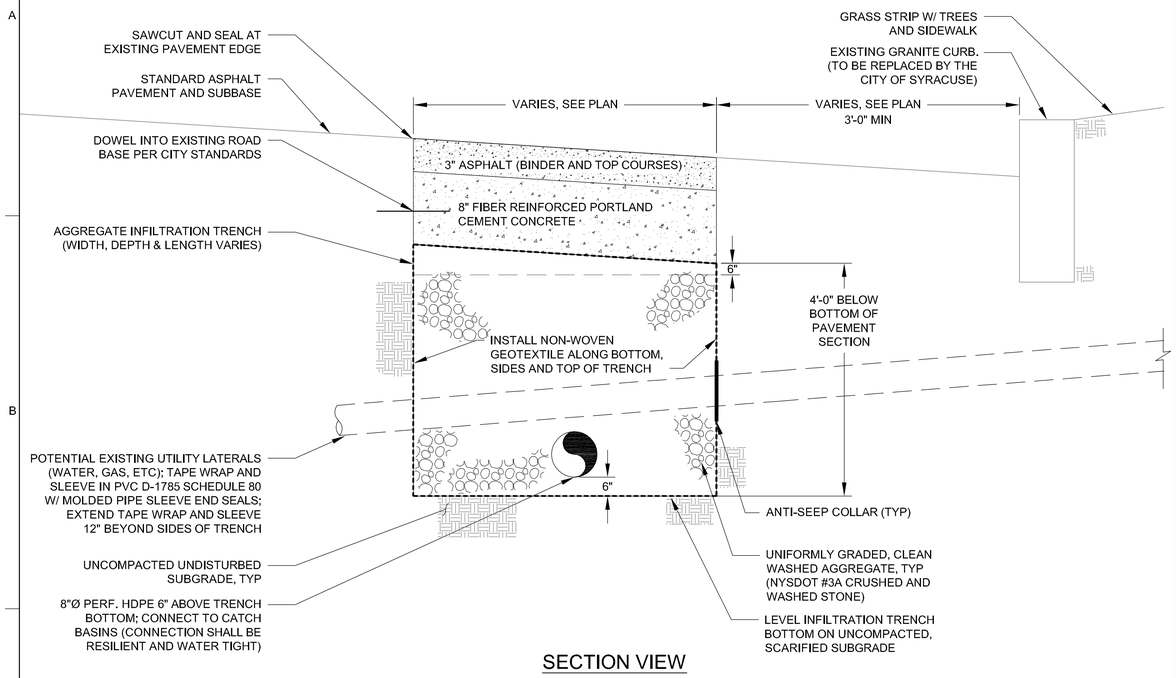

SECTION VIEW

1 INFILTRATION TRENCH
NTS
C-1

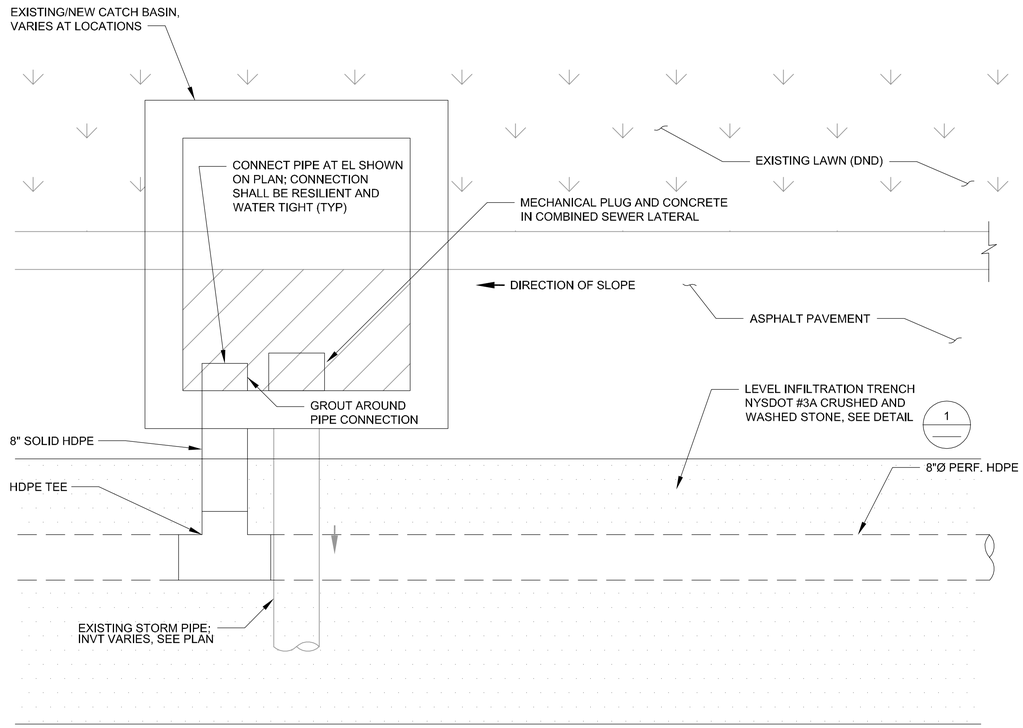

2 INFILTRATION TRENCH CB CONNECTIONS
NTS
C-1

STATE OF NEW YORK
DANIEL P. WIRLE
085183-1
LICENSED PROFESSIONAL ENGINEER

NO.	DATE	REVISION	BY	APVD

DSGN Z MONGE | DR T WEINSTEIN | CHK | APVD

C-198, C-199 & C-201
ONEIDA ST, CLINTON ST & RICHMOND AVE
SYRACUSE, NY
ONONDAGA COUNTY

430 GENESEE STREET
SUITE 400
SYRACUSE NY, 13202

CH2MHILL®

CIVIL
DETAILS 2 OF 3

NTS
VERIFY SCALE
BAR IS ONE INCH ON ORIGINAL DRAWING.
0 1"

DATE	JUNE 2013
PROJ	381098
DWG	C-6
SHEET	8 of 9

ISSUED FOR CONSTRUCTION

REUSE OF DOCUMENTS: THIS DOCUMENT, AND THE IDEAS AND DESIGNS INCORPORATED HEREIN, AS AN INSTRUMENT OF PROFESSIONAL SERVICE, IS THE PROPERTY OF CH2M HILL AND IS NOT TO BE USED, IN WHOLE OR IN PART, FOR ANY OTHER PROJECT WITHOUT THE WRITTEN AUTHORIZATION OF CH2M HILL.
©CH2M HILL 2011. ALL RIGHTS RESERVED.

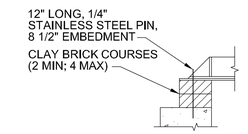

SECTION B-B

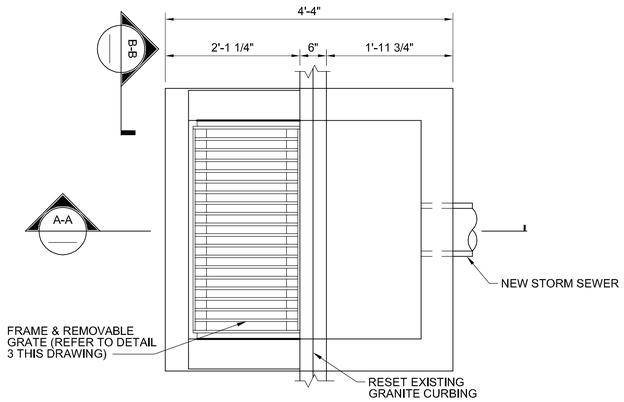

PLAN

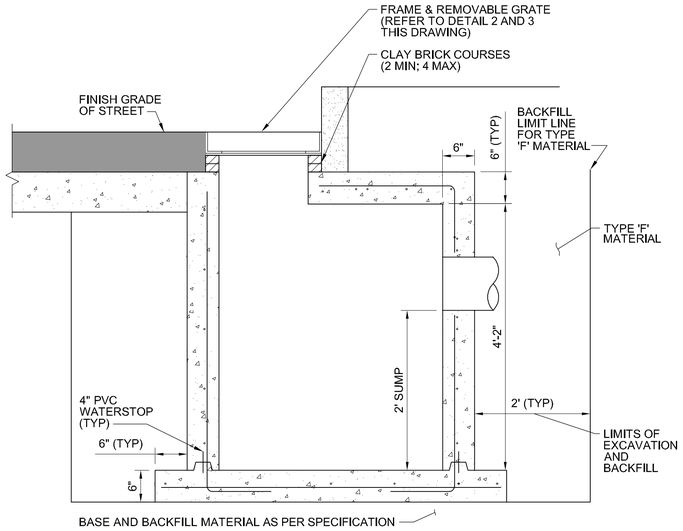

SECTION A-A

NOTE:

1. INSTALL EIGHT (8) 1"Ø WEEP HOLES AT BOTTOM OF CATCH BASIN
2. CATCH BASIN SHALL BE PER CITY OF SYRACUSE, NY STANDARDS.

1 PRECAST CATCH BASIN

NTS

C-1

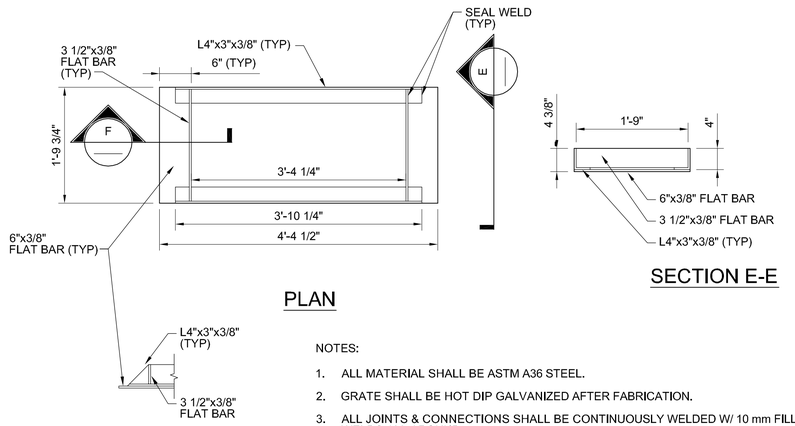

PLAN

SECTION E-E

SECTION F-F

NOTES:

1. ALL MATERIAL SHALL BE ASTM A36 STEEL.
2. GRATE SHALL BE HOT DIP GALVANIZED AFTER FABRICATION.
3. ALL JOINTS & CONNECTIONS SHALL BE CONTINUOUSLY WELDED W/ 10 mm FILLET WELDS ALL AROUND.
4. CATCH BASIN FRAME SHALL BE PER CITY OF SYRACUSE, NY STANDARDS.

2 PRECAST CATCH BASIN FRAME

NTS

C-1

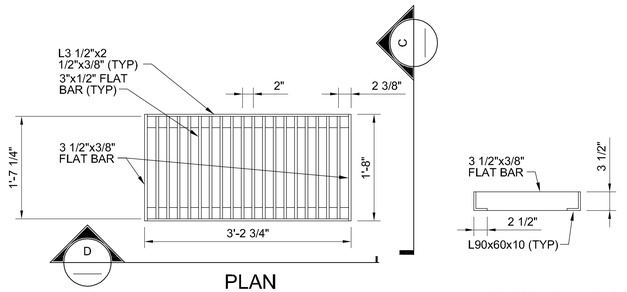

PLAN

SECTION C-C

SECTION D-D

NOTES:

1. ALL MATERIAL SHALL BE ASTM A36 STEEL.
2. GRATE SHALL BE HOT DIP GALVANIZED AFTER FABRICATION.
3. ALL JOINTS & CONNECTIONS SHALL BE FULLY WELDED W/ 3/8" FILLET WELDS.
4. CATCH BASIN GRATE SHALL BE PER CITY OF SYRACUSE, NY STANDARDS.

3 PRECAST CATCH BASIN GRATE

NTS

C-1

CH2MHILL®
430 GENESEE STREET
SUITE 400
SYRACUSE NY, 13202

CIVIL

DETAILS 3 OF 3

C-198, C-199 & C-201
ONEIDA ST, CLINTON ST & RICHMOND AVE
SYRACUSE, NY
ONONDAGA COUNTY

NO.	DATE	REVISION	DR	CHK	BY	APVD
DSGN	Z MONGE	T WEINSTEIN				

NTS

VERIFY SCALE

BAR IS ONE INCH ON ORIGINAL DRAWING
0 1"

DATE	JUNE 2013
PROJ	381098
DWG	C-7
SHEET	9 of 9

ISSUED FOR CONSTRUCTION

REUSE OF DOCUMENTS: THIS DOCUMENT, AND THE IDEAS AND DESIGNS INCORPORATED HEREIN, AS AN INSTRUMENT OF PROFESSIONAL SERVICE, IS THE PROPERTY OF CH2M HILL AND IS NOT TO BE USED, IN WHOLE OR IN PART, FOR ANY OTHER PROJECT WITHOUT THE WRITTEN AUTHORIZATION OF CH2MHILL.

©CH2M HILL 2011. ALL RIGHTS RESERVED.

FILENAME: C:\Users\...\381098.dwg PLOT DATE: 05/31/2013 PLOT TIME: 07:45:44 AM